CITY OF LAFAYETTE

Board of Public Works and Safety
Lafayette City Hall: Common Council Chambers
Caucus is Tuesday at 8:30AM in Board of Works room

Meeting: April 21, 2020

PLEDGE OF ALLEGIANCE

APPROVAL OF MINUTES

a. April 14, 2020

Documents:

04142020.pdf

BID OPENING

a. Memorial Island Phase 3 (Columbian Park)

BIDS UNDER ADVISEMENT

a. Pearl River Relocation Project

b. Columbian Park Carousel Project

c. Columbian Park Lagoon Dredging Improvements

d. Public Works Campus, Phase 1

NEW BUSINESS

Engineering

a. Contract With Butler, Fairman, & Seufert For S. 9th Street Reconstruction From Brick N Wood Drive To Veterans Memorial Pkwy Project

Documents:

BFS-S. 9th Street Reconstruction.pdf

b. Contract With Fisher Engineering For Main Street & Kossuth Street Intersection Improvement Project

Documents:

Fisher Engineering-Main Street and Kossuth.pdf

c. Loeb Stadium Bid Package #1 General Trades-Change Order #4

Documents:

BP 1-Change Order BP-1-4.pdf

d. Loeb Stadium Bid Package #1 General Trades-Change Order #5

Documents:

BP 1-Change Order BP-1-5.pdf

e. Loeb Stadium Bid Package #5 Aluminum Entrances/Storefront/Window Units-Change Order #1

Documents:

BP 5-Change Order BP-5-1.pdf

f. Loeb Stadium Bid Package #7 Mechanical-Change Order #2

Documents:

BP 7-Change Order BP-7-2.pdf

g. Loeb Stadium Bid Package #8 Electrical-Change Order #3

Documents:

BP 8-Change Order BP-8-3.pdf

h. Loeb Stadium Bid Package #8 Electrical-Change Order #4

Documents:

BP 8-Change Order BP-8-4.pdf

Lafayette Housing Authority

a. Agreement Between Lafayette Housing Consortium And Faith Community Development Corp. 2019 Project #1-N. 8th Street

Documents:

Faith Comm Dev. 2019 Project 1-N. 8th Street.pdf

Lafayette Renew

a. Change Order #1-North Street Phase 2 Improvement Project

Documents:

Change Order 1-North Street.pdf

b. Certificate Of Completion-North Street Reconstruction, Phase 2

Documents:

Certificate of Completion-North Street.pdf

c. Amendment #2-Service Area 21 Phase 1 Project With HWC Engineering

Documents:

Amendment 2-Service Area 21 Phase 1 Project.pdf

d. Amendment #1-40 & 8 Lift Station And Force Main Replacement Project With Wessler Engineering

Documents:

Amendment 1-40 and 8 Lift Station and Force Main Replacement Project.pdf

e. Amendment #1-Northeast Area Sewer Replacement Project With Wessler Engineering

Documents:

Amendment 1-Northeast Area sewer Replacement Project.pdf

Purchasing

a. Declaration Of Worthless Property-Sanitation Department

Documents:

Worthless Property-Sanitation.pdf

b. Declaration Of Worthless Property-Street Department

Documents:

Worthless Property-Street.pdf

c. Vehicle Trade-In Authorization For Street Department

Documents:

Vehicle Trade Authorization.pdf

CLAIMS

a. Claims 04/21/2020

Documents:

Claims 04212020.pdf

MISCELLANEOUS

a. Special Event Request-Lafayette Farmer's Market

Documents:

Farmers Market.pdf

A list of all permits issued for the preceding week is available at
http://www.lafayette.in.gov/DocumentCenter/Index/375

BOARD OF PUBLIC WORKS AND SAFETY
MINUTES
April 14, 2020

Regular Session:

The Board of Public Works and Safety met in regular session on Tuesday, April 14, 2020 at 9:00 a.m. in the Common Council Chambers. Members present were: Gary Henriott, Cindy Murray and Amy Moulton. Absent: Ron Shriner and Norm Childress

Jacque Chosnek, 1st Deputy City Attorney, was also present.

President Henriott called the meeting to order.

The Pledge of Allegiance was given to the flag of our Country.

MINUTES

Mrs. Moulton moved for approval of the minutes from the April 7, 2020 regular meeting. Mrs. Murray seconded. Passed.

BID OPENING

Pearl River Relocation Project

This being the time set to open bids for the Pearl River Relocation Project and the following bids were received and opened:

Bowen Engineering
Indianapolis, Indiana

Base Bid: $3,523,976.00
Alternate #1: $1,503,458.00 (addition)
Alternate #1: $49,599.00 (deduction)
Alternate #2: $123,101.00 (addition)
Alternate #2: $26,477.00 (deduction)
Alternate #3: $246,642.00 (addition)
Alternate #3: $116,445.00 (deduction)

Atlas Excavating, Inc.
West Lafayette, Indiana

Base Bid: $4,376,915.00
Alternate #1 total: $1,242,510.00
Alternate #2 total: $220,936.00
Alternate #3 total: $260,320.00

Mrs. Moulton moved to take the bids under advisement for further review. Mrs. Murray seconded. Passed.

Columbian Park Carousel Project

This being the time set to open bids for the Columbian Park Carousel Project and the following bids were received and opened:

Mattcon General Contractors
Indianapolis, Indiana

Base Bid: $1,815,000.00

Morgan Constructors, LLC
Lafayette, Indiana

Base Bid: $1,762,000.00

Mrs. Moulton moved to take the bids under advisement for further review. Mrs. Murray seconded. Passed.

Columbian Park Lagoon Dredging Improvements

This being the time set to open bids for the Columbian Park Lagoon Dredging Improvements and the following bids were received and opened:

Merrell Bros., Inc
Kokomo, Indiana

Base Bid: $456,230.00

Global Infrastructure
Country Club Hills, Illinois

Base Bid: $626,724.00
Alternate #1: $489,750.00
Alternate #2: $380,888.00

Mrs. Moulton moved to take the bids under advisement for further review. Mrs. Murray seconded. Passed.

Public Works Campus, Phase 1

This being the time set to open bids for the Public Works Campus, Phase 1 and the following bids were received and opened:

Mattcon General Contractors
Indianapolis, Indiana

Lump Sum Bid Price for Base Bid: $1,630,000.00
Alternate #1: $2,700.00 (addition)
Alternate #2: $9,300.00 (addition)
Alternate #3: $7,800.00 (addition)
Alternate #4: $281,000.00 (addition)
Alternate #5: $93,500.00 (addition)
Alternate #6: $142,500.00 (addition)
Alternate #7: $42,500.00 (addition)
Alternate #8: $17,428.00 (deduction)
Alternate #9: $28,562.00 (deduction)
Total of All Unit Price Bid Items: $142,081.50

Alderson Commercial Group
Indianapolis, Indiana

Lump Sum Bid Price for Base Bid: $1,253,710.00
Alternate #1: $3,400.00 (addition)
Alternate #2: $4,800.00 (addition)
Alternate #3: $28,000.00 (addition)
Alternate #4: $145,000.00 (addition)
Alternate #5: $34,500.00 (addition)
Alternate #6: $76,750.00 (addition)
Alternate #7: $56,364.00 (addition)
Alternate #8: $19,928.00 (deduction)

Alternate #9: $27,862.00 (deduction)
Total of All Unit Price Bid Items: $184,764.00

Greystone Construction Co.
Shakopee, Minnesota

Lump Sum Bid Price for Base Bid: $1,437,940.00
Alternate #1: $2,428.00 (addition)
Alternate #2: $8,120.00 (addition)
Alternate #3: $7,210.00 (addition)
Alternate #4: $260,645.00 (addition)
Alternate #5: $88,042.00 (addition)
Alternate #6: $133,230.00 (addition)
Alternate #7: $39,259.00 (addition)
Alternate #8: $38,746.00 (deduction)
Alternate #9: $35,038.00 (deduction)
Total of All Unit Price Bid Items: $136,035.00

Mrs. Moulton moved to take the bids under advisement for further review. Mrs. Murray seconded. Passed.

NEW BUSINESS

Engineering

Change Order #3-Haggerty Resurfacing and Widening

Jeromy Grenard, Public Works Director, presented to the Board and recommended approval of Change Order #3 for the Haggerty Resurfacing and Widening Project. Mr. Grenard stated that this was a change in conditions in the amount of $52,456.00 which brings the revised contract amount to $2,191,582.00. Mrs. Moulton moved for approval. Mrs. Murray seconded. Passed.

Permission to Advertise-Haggerty Pointe Storm Sewer Extension

Mr. Grenard presented to the Board and recommended approval of a Permission to Advertise for the Haggerty Pointe Storm Sewer Extension Project. The publications are set to run on April 17 & 24, 2020 with a bid opening on May 12, 2020. Mrs. Moulton moved for approval. Mrs. Murray seconded. Passed.

Change Order #1-2019 Beck Lane Concrete and Resurfacing

Mr. Grenard presented to the Board and recommended approval of Change Order #1 for the 2019 Beck Lane Concrete and Resurfacing Project. Mr. Grenard stated that this was a change in scope in the amount of $4,578.54 which brings the revised contract amount to $667,938.54. Mrs. Moulton moved for approval. Mrs. Murray seconded. Passed.

Addendum #2-Utility Service Agreement for Wastl Master Agreement Redwood Lafayette Twyckenham Blvd

Mr. Grenard presented to the Board and recommended approval of Addendum #2 for the Utility Service Agreement for Wastl Master Agreement Redwood Lafayette Twyckenham Blvd. Mrs. Murray moved for approval. Mrs. Moulton seconded. Passed.

Addendum #10-Utility Service Agreement for 52 South Industrial Subdivision Phase Two Master Agreement (Mann Brother Holdings)

Mr. Grenard presented to the Board and recommended approval of Addendum #10 for the Utility Service Agreement for 52 South Industrial Subdivision Phase Two Master Agreement (Mann Brother Holdings). Mrs. Murray moved for approval. Mrs. Moulton seconded. Passed.

Economic Development

Permission to Advertise-Traffic Signal Modernization-South Street Intersection with 5th & 6th Streets

Mr. Grenard presented to the Board and recommended approval of a Permission to Advertise for the Traffic Signal Modernization for South Street Intersection with 5th & 6th Streets. The publications are set to run on April 17 & 24, 2020 with a bid opening on May 12, 2020. Mrs. Moulton moved for approval. Mrs. Murray seconded. Passed.

Parks Department

Permission to Advertise-Loeb Stadium Video Display Board

Mr. Grenard presented to the Board and recommended approval of a Permission to Advertise for the Loeb Stadium Video Display Board. The publications are set to run on April 17 & 24, 2020 with a bid opening on May 12, 2020. Mrs. Moulton moved for approval. Mrs. Murray seconded. Passed.

CLAIMS

Tim Clary, Controller, presented for Board approval, Claims in the amount of $3,363,575.22. President Henriott had a question about on Page 14 regarding the Indiana Department of Transportation lighting along Concord Road in the amount of $79,000.00. Mr. Clary stated that is the City of Lafayette's 20% funding responsibility of the federal contract. Mrs. Murray moved for approval. Mrs. Moulton seconded. Passed.

Time: 9:27 a.m.

BOARD OF PUBLIC WORKS AND SAFETY
Gary Henriott s/s
President

ATTEST: Mindy Miller s/s
Mindy Miller, 1st Deputy Clerk

Minutes written by Mindy Miller, 1st Deputy Clerk
*A digital audio recording of this meeting is available in the Lafayette City Clerk's Office or online at http://www.lafayette.in.gov/agendacenter.
**A list of all permits issued for the preceding week is available at http://www.lafayette.in.gov/DocumentCenter/Index/375

CITY OF
LAFAYETTE

Office of the City Engineer

April 21, 2020

Board of Public Works and Safety
City of Lafayette
20 N 6th Street
Lafayette, IN 47901

Dear Board Members:

You have before you the Contract with Butler, Fairman, and Seufert for the S 9th Street Reconstruction from Brick N Wood Drive to Veterans Memorial Parkway Project. This Project will add capacity, improve the pavement conditions, and add pedestrian connectivity in this part of the City. Major components of this Project include:

- Widen S 9th Street from 2 lanes to 3 lanes, improving traffic flow.
- Addition of storm sewer and curb and gutter
- Addition of a multi-use trail for pedestrians and bicyclists
- Addition of pedestrian-scale lighting
- Intersection improvement at the intersection of S 9th Street

The contract amount for this project is $726,580.00. This is a Federal Aid project, and thus it will be paid for with 80% Federal funds and 20% local funds.

This contract has been reviewed by the City Attorney and I recommend it for your approval.

Sincerely,

Jeromy L. Grenard

Jeromy L. Grenard, PE, PTOE
City Engineer / Public Works Director

LPA - CONSULTING CONTRACT

This Contract ("this Contract") is made and entered into effective as of the date of the last signature affixed hereto ("Effective Date") by and between City of Lafayette, Indiana, acting by and through its proper officials ("LOCAL PUBLIC AGENCY" or "LPA"), and Butler, Fairman & Seufert, Inc. ("the CONSULTANT"), [an individual residing in the State of Indiana] [a corporation/limited liability company organized under the laws of the State of Indiana].

Des. No.: 1900482

Project Description: South 9th Street from Brick N Wood Drive to Veterans Memorial Parkway

RECITALS

WHEREAS, the LPA has entered into an agreement to utilize federal monies with the Indiana Department of Transportation ("INDOT") for a transportation or transportation enhancement project ("the Project"), which Project Coordination Contract is herein attached as Attachment 1 and incorporated as reference; and

WHEREAS, the LPA wishes to hire the CONSULTANT to provide services toward the Project completion more fully described in Appendix "A" attached hereto ("Services");

WHEREAS, the CONSULTANT has extensive experience, knowledge and expertise relating to these Services; and

WHEREAS, the CONSULTANT has expressed a willingness to furnish the Services in connection therewith.

NOW, THEREFORE, in consideration of the following mutual covenants, the parties hereto mutually covenant and agree as follows:

The "Recitals" above are hereby made an integral part and specifically incorporated into this Contract.

SECTION I **SERVICES BY CONSULTANT**. The CONSULTANT will provide the Services and deliverables described in Appendix "A" which is herein attached to and made an integral part of this Contract.

SECTION II **INFORMATION AND SERVICES TO BE FURNISHED BY THE LPA.** The information and services to be furnished by the LPA are set out in Appendix "B" which is herein attached to and made an integral part of this Contract.

SECTION III **TERM**. T he term of this Contract shall be from the date of the last signature affixed to this Contract to the completion of the construction contract which is estimated to be January 15, 2025. A schedule for completion of the Services and deliverables is set forth in Appendix "C" which is herein attached to and made an integral part of this Contract.

SECTION IV **COMPENSATION**. The LPA shall pay the CONSULTANT for the Services performed under this Contract as set forth in Appendix "D" which is herein attached to and made an integral part of this Contract. The maximum amount payable under this Contract shall not exceed **$ 726,580.00.**

SECTION V **NOTICE TO PROCEED AND SCHEDULE**. The CONSULTANT shall begin the work to be performed under this Contract only upon receipt of the written notice to proceed from the LPA, and shall deliver the work to the LPA in accordance with the schedule contained in Appendix "C" which is herein attached to and made an integral part of this Contract.

SECTION VI GENERAL PROVISIONS

1. **Access to Records**. The CONSULTANT and its sub-consultants, if any, shall maintain all books, documents, papers, accounting records, and other evidence pertaining to all costs incurred under this Contract. They shall make such materials available at their respective offices at all reasonable times during this Contract, and for three (3) years from the date of final payment under this Contract, for inspection or audit by the LPA, State, FHWA, or authorized designees. Copies shall be furnished at no cost to the LPA if requested.

2. **Assignment; Successors**

   A. The CONSULTANT binds its successors and assignees to all the terms and conditions of this Contract. The CONSULTANT may assign its right to receive payments to such third parties as the CONSULTANT may desire without the prior written consent of the LPA, provided that the CONSULTANT gives written notice (including evidence of such assignment) to the LPA thirty (30) days in advance of any payment so assigned. The assignment shall cover all unpaid amounts under this Contract and shall not be made to more than one party.

   B. The CONSULTANT shall not assign or subcontract the whole or any part of this Contract without the LPA's prior written consent. Additionally, the CONSULTANT shall provide prompt written notice to the LPA of any change in the CONSULTANT's legal name or legal status so that the changes may be documented and payments to the successor entity may be made.

3. **Assignment of Antitrust Claims.** As part of the consideration for the award of this Contract, the CONSULTANT assigns to the LPA all right, title and interest in and to any claims the CONSULTANT now has, or may acquire, under state or federal antitrust laws relating to the products or services which are the subject of this Contract.

4. **Audits**. The CONSULTANT acknowledges that it may be required to submit to an audit of funds paid through this Contract. Any such audit shall be conducted in accordance with IC § 5-11-1, *et seq.*, and audit guidelines specified by the State.

   The State considers the CONSULTANT to be a "Contractor" under 2 C.F.R. 200.330 for purposes of this Contract. However, if it is determined that the CONSULTANT is a "sub recipient" and if required by applicable provisions of 2 C.F.R. 200 (Uniform Administrative Requirements, Cost Principles, and Audit Requirements), CONSULTANT shall arrange for a financial and compliance audit, which complies with 2 C.F.R. 200.500 *et seq*.

5. **Authority to Bind CONSULTANT**. The signatory for the CONSULTANT represents that he/she has been duly authorized to execute this Contract on behalf of the CONSULTANT and has obtained all necessary or applicable approvals to make this Contract fully binding upon the CONSULTANT when his/her signature is affixed, and accepted by the LPA.

6. **Certification for Federal-Aid Contracts Lobbying Activities**. The CONSULTANT certifies, by signing and submitting this Contract, to the best of its knowledge and belief that the LPA has complied with Section 1352, Title 31, U.S. Code, and specifically, that:

   1. No Federal appropriated funds have been paid or will be paid, by or on behalf of the CONSULTANT, to any person for influencing or attempting to influence an officer or employee of any Federal agency, a Member of Congress, an officer or employee of Congress, or an employee of a Member of Congress in connection with the awarding of any federal agreement, the making of any Federal grant, the making of any federal loan, the entering into of any cooperative agreement, and the extension, continuation, renewal, amendment, or modification of any federal agreement, grant, loan, or cooperative agreement.

2. If any funds other than Federal appropriated funds have been paid or will be paid to any person for influencing or attempting to influence an officer or employee of any Federal agency, a Member of Congress, an officer or employee of Congress, or an employee of a Member of Congress in connection with this federal agreement, grant, loan, or cooperative agreement, the undersigned shall complete and submit Standard Form-LLL, (Disclosure Form to Report Lobbying), in accordance with its instructions.

3. The CONSULTANT also agrees by signing this Contract that it shall require that the language of this certification be included in all lower tier sub-consultants, which exceed $100,000, and that all such sub recipients shall certify and disclose accordingly. Any person who fails to sign or file this required certification shall be subject to a civil penalty of not less than $10,000 and not more than $100,000 for each failure.

7. **Changes in Work.** The CONSULTANT shall not commence any additional work or change the scope of the work until authorized in writing by the LPA. The CONSULTANT shall make no claim for additional compensation or time in the absence of a prior written approval and amendment executed by all signatories hereto. This Contract may be amended, supplemented or modified only by a written document executed in the same manner as this Contract. The CONSULTANT acknowledges that no claim for additional compensation or time may be made by implication, oral agreements, actions, inaction, or course of conduct.

8. **Compliance with Laws.**

A. The CONSULTANT shall comply with all applicable federal, state, and local laws, rules, regulations, and ordinances, and all provisions required thereby to be included herein are hereby incorporated by reference. The enactment or modification of any applicable state or federal statute or the promulgation of rules or regulations thereunder after execution of this Contract shall be reviewed by the LPA and the CONSULTANT to determine whether the provisions of this Contract require formal modification.

B. The CONULTANT and its agents shall abide by all ethical requirements that apply to persons who have a business relationship with the LPA as set forth in IC § 4-2-6, *et seq*., IC § 4-2-7, *et seq*. and the regulations promulgated thereunder. **If the CONSULTANT has knowledge, or would have acquired knowledge with reasonable inquiry, that a state officer, employee, or special state appointee, as those terms are defined in IC § 4-2-6-1, has a financial interest in the Contract, the CONSULTANT shall ensure compliance with the disclosure requirements in IC § 4-2-6-10.5 prior to the execution of this Contract.** If the CONSULTANT is not familiar with these ethical requirements, the CONSULTANT should refer any questions to the Indiana State Ethics Commission, or visit the Inspector General's website at http://www.in.gov/ig/. If the CONSULTANT or its agents violate any applicable ethical standards, the LPA may, in its sole discretion, terminate this Contract immediately upon notice to the CONSULTANT. In addition, the CONSULTANT may be subject to penalties under IC §§ 4-2-6, 4-2-7, 35-44.1-1-4, and under any other applicable laws.

C. The CONSULTANT certifies by entering into this Contract that neither it nor its principal(s) is presently in arrears in payment of taxes, permit fees or other statutory, regulatory or judicially required payments to the State of Indiana. The CONSULTANT agrees that any payments currently due to the State of Indiana may be withheld from payments due to the CONSULTANT. Additionally, further work or payments may be withheld, delayed, or denied and/or this Contract suspended until the CONSULTANT is current in its payments and has submitted proof of such payment to the State.

D. The CONSULTANT warrants that it has no current, pending or outstanding criminal, civil, or enforcement actions initiated by the State, and agrees that it will immediately notify the State and LPA of any such actions. During the term of such actions, the CONSULTANT agrees that the State and LPA may delay, withhold, or deny work under any supplement, amendment, change order or other contractual device issued pursuant to this Contract.

E. If a valid dispute exists as to the CONSULTANT's liability or guilt in any action initiated by the State or its agencies, and the LPA decides to delay, withhold, or deny work to the CONSULTANT, the CONSULTANT may request that it be allowed to continue, or receive work, without delay. The CONSULTANT must submit, in writing, a request for review to the Indiana Department of Administration (IDOA) following the procedures for disputes outlined herein. A determination by IDOA shall be binding on the parties. Any payments that the State/LPA may delay, withhold, deny, or apply under this section shall not be subject to penalty or interest, except as permitted by IC § 5-17-5.

F. The CONSULTANT warrants that the CONSULTANT and its sub-consultants, if any, shall obtain and maintain all required permits, licenses, registrations, and approvals, and shall comply with all health, safety, and environmental statutes, rules, or regulations in the performance of work activities for the LPA. The CONSULTANT, its employees and sub-consultants have complied with and shall continue to comply with all applicable licensing standards, certification standards, accrediting standards and any other laws, rules or regulations governing services to be provided by t he CONSULTANT pursuant to this Contract. Failure to do so may be deemed a material breach of this Contract and grounds for immediate termination and denial of further work with the LPA.

G. The CONSULTANT affirms that, if it is an entity described in IC Title 23, it is properly registered and owes no outstanding reports to the Indiana Secretary of State.

H. As required by IC § 5-22-3-7:

(1) The CONSULTANT and any principals of the CONSULTANT certify that:

(A) the CONSULTANT, except for de minimis and nonsystematic violations, has not violated the terms of:

(i) IC §24-4.7 [Telephone Solicitation Of Consumers];

(ii) IC §24-5-12 [Telephone Solicitations]; or

(iii) IC §24-5-14 [Regulation of Automatic Dialing Machines];

in the previous three hundred sixty-five (365) days, even if IC § 24-4.7 is preempted by federal law; and

(B) the CONSULTANT will not violate the terms of IC § 24-4.7 for the duration of the Contract, even if IC §24-4.7 is preempted by federal law.

(2) The CONSULTANT and any principals of the CONSULTANT certify that an affiliate or principal of the CONSULTANT and any agent acting on behalf of the CONSULTANT or on behalf of an affiliate or principal of the CONSULTANT, except for de minimis and nonsystematic violations,

(A) has not violated the terms of IC § 24-4.7 in the previous three hundred sixty-five (365) days, even if IC §24-4.7 is preempted by federal law; and

(B) will not violate the terms of IC § 24-4.7 for the duration of the Contract, even if IC §24-4.7 is preempted by federal law.

9. **Condition of Payment.** The CONSULTANT must perform all Services under this Contract to the LPA's reasonable satisfaction, as determined at the discretion of the LPA and in accordance with all applicable federal, state, local laws, ordinances, rules, and regulations. The LPA will not pay for work not performed to the LPA's reasonable satisfaction, inconsistent with this Contract or performed in violation of federal, state, or local law (collectively, "deficiencies") until all deficiencies are remedied in a timely manner.

10. Confidentiality of LPA Information.

A. The CONSULTANT understands and agrees that data, materials, and information disclosed to the CONSULTANT may contain confidential and protected information. Therefore, the CONSULTANT covenants that data, material, and information gathered, based upon or disclosed to the CONSULTANT for the purpose of this Contract, will not be disclosed to others or discussed with third parties without the LPA's prior written consent.

B. The parties acknowledge that the Services to be performed by the CONSULTANT for the LPA under this Contract may require or allow access to data, materials, and information containing Social Security numbers maintained by the LPA in its computer system or other records. In addition to the covenant made above in this section and pursuant to 10 IAC 5-3-1(4), the CONSULTANT and the LPA agree to comply with the provisions of IC 4-1-10 and IC 4-1-11. If any Social Security number(s) is/are disclosed by the CONSULTANT, the CONSULTANT agrees to pay the cost of the notice of disclosure of a breach of the security of the system in addition to any other claims and expenses for which it is liable under the terms of this Contract.

11. Debarment and Suspension.

A. The CONSULTANT certifies by entering into this Contract that neither it nor its principals nor any of its sub-consultants are presently debarred, suspended, proposed for debarment, declared ineligible or voluntarily excluded from entering into this Contract by any federal agency or by any department, agency or political subdivision of the State of Indiana. The term "principal" for purposes of this Contract means an officer, director, owner, partner, key employee or other person with primary management or supervisory responsibilities, or a person who has a critical influence on or substantive control over the operations of the CONSULTANT.

B. The CONSULTANT certifies that it has verified the state and federal suspension and debarment status for all sub-consultants receiving funds under this Contract and shall be solely responsible for any recoupment, penalties or costs that might arise from use of a suspended or debarred sub-consultants. The CONSULTANT shall immediately notify the LPA if any sub-consultant becomes debarred or suspended, and shall, at the LPA's request, take all steps required by the LPA to terminate its contractual relationship with the sub-consultant for work to be performed under this Contract.

12. Delays and Extensions. The CONSULTANT agrees that no charges or claim for damages shall be made by it for any minor delays from any cause whatsoever during the progress of any portion of the Services specified in this Contract. Such delays, if any, shall be compensated for by an extension of time for such period as may be determined by the LPA subject to the CONSULTANT's approval, it being understood, however, that permitting the CONSULTANT to proceed to complete any services, or any part of them after the date to which the time of completion may have been extended, shall in no way operate as a waiver on the part of the LPA of any of its rights herein. In the event of substantial delays or extensions, or change of any kind, not caused by the CONSULTANT, which causes a material change in scope, character or complexity of work the CONSULTANT is to perform under this Contract, the LPA at its sole discretion shall determine any adjustments in compensation and in the schedule for completion of the Services. CONSULTANT must notify the LPA in writing of a material change in the work immediately after the CONSULTANT first recognizes the material change.

13. Disadvantaged Business Enterprise Program.

A. Notice is hereby given to the CONSULTANT and any sub-consultant, and both agree, that failure to carry out the requirements set forth in 49 CFR Sec. 26.13(b) shall constitute a breach of this Contract and, after notification and failure to promptly cure such breach, may result in termination of this Contract or such remedy as INDOT deems appropriate. The referenced section requires the following assurance to be included in all subsequent contracts between the CONSULTANT and any sub-consultant:

> The CONSULTANT, sub recipient or sub-consultant shall not discriminate on the basis of race, color, national origin, or sex in the performance of this Contract. The CONSULTANT shall carry out applicable requirements of 49 CFR Part 26 in the award and administration of DOT-assisted contracts. Failure by the CONSULTANT to carry out these requirements is a material breach of this Contract, which may result in the termination of this Contract or such other remedy, as INDOT, as the recipient, deems appropriate.

B. The CONSULTANT shall make good faith efforts to achieve the DBE percentage goal that may be included as part of this Contract with the approved DBE sub-consultant identified on its Affirmative Action Certification submitted with its Letter of Interest, or with approved amendments. Any changes to a DBE firm listed in the Affirmative Action Certification must be requested in writing and receive prior approval by the LPA and INDOT's Economic Opportunity Division Director. After this Contract is completed and if a DBE sub-consultant has performed services thereon, the CONSULTANT must complete, and return, a Disadvantaged Business Enterprise Utilization Affidavit ("DBE-3 Form") to INDOT's Economic Opportunity Division Director. The DBE-3 Form requires certification by the CONSULTANT AND DBE sub-consultant that the committed contract amounts have been paid and received.

14. Disputes.

A. Should any disputes arise with respect to this Contract, the CONSULTANT and the LPA agree to act immediately to resolve such disputes. Time is of the essence in the resolution of disputes.

B. The CONSULTANT agrees that, the existence of a dispute notwithstanding, it will continue without delay to carry out all of its responsibilities under this Contract that are not affected by the dispute. Should the CONSULTANT fail to continue to perform its responsibilities regarding all non-disputed work, without delay, any additional costs incurred by the LPA or the CONSULTANT as a result of such failure to proceed shall be borne by the CONSULTANT, and the CONSULTANT shall make no claim against the LPA for such costs.

C. If a party to this Contract is not satisfied with the progress toward resolving a dispute, the party must notify the other party of this dissatisfaction in writing. Upon written notice, the parties have (10) business days, unless the parties mutually agree in writing to extend this period, following the written notification to resolve the dispute. If the dispute is not resolved within ten (10) business days, a dissatisfied party may submit the dispute in writing to initiate negotiations to resolve the dispute. The LPA may withhold payments on disputed items pending resolution of the dispute.

15. **Drug-Free Workplace Certification.**
As required by Executive Order No. 90-5 dated April 12, 1990, issued by the Governor of Indiana, the CONSULTANT hereby covenants and agrees to make a good faith effort to provide and maintain a drug-free workplace. The CONSULTANT will give written notice to the LPA within ten (10) days after receiving actual notice that the CONSULTANT, or an employee of the CONSULTANT in the State of Indiana, has been convicted of a criminal drug violation occurring in the workplace. False certification or violation of this certification may result in sanctions including, but not limited to, suspension of contract payments, termination of this Contract and/or debarment of contracting opportunities with the LPA for up to three (3) years.

In addition to the provisions of the above paragraph, if the total amount set forth in this Contract is in excess of $25,000.00, the CONSULTANT certifies and agrees that it w ill provide a drug-free workplace by:

A. Publishing and providing to all of its employees a statement notifying them that the unlawful manufacture, distribution, dispensing, possession or use of a controlled substance is prohibited in the CONSULTANT's workplace, and specifying the actions that will be taken against employees for violations of such prohibition;

B. Establishing a drug-free awareness program to inform its employees of: (1) the dangers of drug abuse in the workplace; (2) the CONSULTANT's policy of maintaining a drug-free workplace; (3) any available drug counseling, rehabilitation and employee assistance programs; and (4) the penalties that may be imposed upon an employee for drug abuse violations occurring in the workplace;

C. Notifying all employees in the statement required by subparagraph (A) above that as a condition of continued employment, the employee will: (1) abide by the terms of the statement; and (2) notify the CONSULTANT of any criminal drug statute conviction for a violation occurring in the workplace no later than five (5) days after such conviction;

D. Notifying the LPA in writing within ten (10) days after receiving notice from an employee under subdivision (C)(2) above, or otherwise receiving actual notice of such conviction;

E. Within thirty (30) days after receiving notice under subdivision (C)(2) above of a conviction, imposing the following sanctions or remedial measures on any employee who is convicted of drug abuse violations occurring in the workplace: (1) taking appropriate personnel action against the employee, up t o and including termination; or (2) requiring such employee to satisfactorily participate in a drug abuse assistance or rehabilitation program approved for such purposes by a federal, state or local health, law enforcement, or other appropriate agency; and

F. Making a good faith effort to maintain a drug-free workplace through the implementation of subparagraphs (A) through (E) above.

16. **Employment Eligibility Verification.** As required by IC § 22-5-1.7, the CONSULTANT swears or affirms under the penalties of perjury that the CONSULTANT does not knowingly employ an unauthorized alien. The CONSULTANT further agrees that:

A. The CONSULTANT shall enroll in and verify the work eligibility status of all his/her/its newly hired employees through the E-Verify program as defined in IC § 22-5-1.7-3. The CONSULTANT is not required to participate should the E-Verify program cease to exist. Additionally, the CONSULTANT is not required to participate if the CONSULTANT is self-employed and does not employ any employees.

B. The CONSULTANT shall not knowingly employ or contract with an unauthorized alien. The CONSULTANT shall not retain an employee or contract with a person that the CONSULTANT subsequently learns is an unauthorized alien.

C. The CONSULTANT shall require his/her/its sub-consultants, who perform work under this Contract, to certify to the CONSULTANT that the sub-consultant does not knowingly employ or contract with an unauthorized alien and that the sub-consultant has enrolled and is participating in the E-Verify program.

D. The CONSULTANT agrees to maintain this certification throughout the duration of the term of a contract with a sub-consultant.

The LPA may terminate for default if the CONSULTANT fails to cure a breach of this provision no later than thirty (30) days after being notified by the LPA.

17. **Force Majeure**. In the event that either party is unable to perform any of its obligations under this Contract or to enjoy any of its benefits because of natural disaster or decrees of governmental bodies not the fault of the affected party (hereinafter referred to as a "Force Majeure Event"), the party who has been so affected shall immediately or as soon as is reasonably possible under the circumstances give notice to the other party and shall do everything possible to resume performance. Upon receipt of such notice, all obligations under this Contract shall be immediately suspended. If the period of nonperformance exceeds thirty (30) days from the receipt of notice of the Force Majeure Event, the party whose ability to perform has not been so affected may, by giving written notice, terminate this Contract.

18. **Funding Cancellation**. As required by Financial Management Circular 2007-1 and IC § 5-22-17-5, when the Director of the State Budget Agency makes a written determination that funds are not appropriated or otherwise available to support continuation of performance of this Contract, this Contract shall be canceled. A determination by the Director of State Budget Agency that funds are not appropriated or otherwise available to support continuation of performance shall be final and conclusive.

19. **Governing Law.** This Contract shall be governed, construed, and enforced in accordance with the laws of the State of Indiana, without regard to its conflict of laws rules. Suit, if any, must be brought in the State of Indiana.

20. **Indemnification**. The CONSULTANT agrees to indemnify, defend, and hold harmless the LPA, its agents, officials, and employees from all third party claims and suits including court costs, attorney's fees, and other expenses caused by any act or omission of the CONSULTANT and/or its sub-consultants, if any, in the performance of this Contract. The LPA will not provide indemnification to the CONSULTANT.

21. **Independent Contractor; Workers' Compensation Insurance.** The CONSULTANT is performing as an independent entity under this Contract. No part of this Contract shall be construed to represent the creation of an employment, agency, partnership or joint venture agreement between the parties. Neither party will assume liability for any injury (including death) to any persons, or damage to any property, arising out of the acts or omissions of the agents, employees or sub-consultants of the other party. The CONSULTANT shall provide all necessary unemployment and workers' compensation insurance for the CONSULTANT's employees, and shall provide the LPA with a Certificate of Insurance evidencing such coverage prior to starting work under this Contract.

22. **Liability.** If the CONSULTANT or any of its sub-consultants fail to comply with any federal requirement which results in the LPA's repayment of federal funds to INDOT the CONSULTANT shall be responsible to the LPA, for repayment of such costs to the extent such costs are caused by the CONSULTANT and/or its SUB-CONSULTANTS.

23. **Licensing Standards**. The CONSULTANT, its employees and sub-consultants shall comply with all applicable licensing standards, certification standards, accrediting standards and any other laws, rules, or regulations governing services to be provided by the CONSULTANT pursuant to this Contract. The LPA will not pay the CONSULTANT for any services performed when the CONSULTANT, its employees or sub-consultants are not in compliance with such applicable standards, laws, rules, or regulations. If any license, certification or accreditation expires or is revoked, or any disciplinary action is taken against an applicable license, certification, or accreditation, the CONSULTANT shall notify the LPA immediately and the LPA, at its option, may immediately terminate this Contract.

24. **Merger & Modification**. This Contract constitutes the entire agreement between the parties. No understandings, agreements, or representations, oral or written, not specified within this Contract will be valid provisions of this Contract. This Contract may not be modified, supplemented, or amended, except by written agreement signed by all necessary parties.

25. **Nondiscrimination**. Pursuant to the Indiana Civil Rights Law, specifically IC § 22-9-1-10, and in keeping with the purposes of the federal Civil Rights Act of 1964, the Age Discrimination in Employment Act, and the Americans with Disabilities Act, the CONSULTANT covenants that it shall not discriminate against any employee or applicant for employment relating to this Contract with respect to the hire, tenure, terms, conditions or privileges of employment or any matter directly or indirectly related to employment, because of the employee's or applicant's race, color, national origin, religion, sex, age, disability, ancestry, status as a veteran, or any other characteristic protected by federal, state, or local law ("Protected Characteristics"). The CONSULTANT certifies compliance with applicable federal laws, regulations, and executive orders prohibiting discrimination based on the Protected Characteristics in the provision of services. Breach of this paragraph may be regarded as a material breach of this Contract, but nothing in this paragraph shall be construed to imply or establish an employment relationship between the LPA and any applicant or employee of the CONSULTANT or any sub-consultant.

The LPA is a recipient of federal funds, and therefore, where applicable, the CONSULTANT and any sub-consultants shall comply with requisite affirmative action requirements, including reporting, pursuant to 41 CFR Chapter 60, as amended, and Section 202 of Executive Order 11246 as amended by Executive Order 13672.

26. **Notice to Parties**: Any notice, request, consent or communication (collectively a "Notice") under this Agreement shall be effective only if it is in writing and (a) personally delivered; (b) sent by certified or registered mail, return receipt requested, postage prepaid; or (c) sent by a nationally recognized overnight delivery service, with delivery confirmed and costs of delivery being prepaid, addressed as follows:

Notices to the LPA shall be sent to:

Mr. Jeromy Grenard, PE
Lafayette Engineer and Public Works Director
20 N. 6th Street
Lafayette, IN 47901

Notices to the CONSULTANT shall be sent to:

Butler, Fairman & Seufert
8450 Westfield Blvd, Suite 300
Indianapolis, IN 46240

or to such other address or addresses as shall be furnished in writing by any party to the other party. Unless the sending party has actual knowledge that a Notice was not received by the intended recipient, a Notice shall be deemed to have been given as of the date (i) when personally delivered; (ii) three (3) days after the date deposited with the United States mail properly addressed; or (iii) the next

day when delivered during business hours to overnight delivery service, properly addressed and prior to such delivery service's cut off time for next day delivery. The parties acknowledge that notices delivered by facsimile or by email shall not be effective.

27. **Order of Precedence; Incorporation by Reference.** Any inconsistency or ambiguity in this Contract shall be resolved by gi ving precedence in the following order: (1) this Contract, (2) attachments prepared by t he LPA, (3) RFP document, (4) CONSULTANT's response to RFP document, and (5) attachments prepared by the CONSULTANT. All attachments, and all documents referred to in this paragraph, are hereby incorporated fully by reference.

28. **Ownership of Documents and Materials.**

A. All documents, records, programs, applications, data, algorithms, film, tape, articles, memoranda, and other materials (the "Materials") not developed or licensed by the CONSULTANT prior to execution of this Contract, but specifically developed under this Contract shall be considered "work for hire" and the CONSULTANT hereby transfers and assigns any ownership claims to the LPA so that all Materials will be the property of the LPA. If ownership interest in the Materials cannot be assigned to the LPA, the CONSULTANT grants the LPA a non-exclusive, non-cancelable, perpetual, worldwide royalty-free license to use the Materials and to use, modify, copy and create derivative works of the Materials.

B. Use of the Materials, other than related to contract performance by the CONSULTANT, without the prior written consent of the LPA, is prohibited. During the performance of this Contract, the CONSULTANT shall be responsible for any loss of or damage to the Materials developed for or supplied by the LPA and used to develop or assist in the services provided while the Materials are in the possession of the CONSULTANT. Any loss or damage thereto shall be restored at the CONSULTANT's expense. The CONSULTANT shall provide the LPA full, immediate, and unrestricted access to the Materials and to CONSULTANT's work product during the term of this Contract.

29. **Payments**.

A. All payments shall be made in arrears and in conformance with the LPA's fiscal policies and procedures. No payments will be made in advance of receipt of the goods or services that are the subject of this Contract except as permitted by IC § 4-13-2-20.

B. If the CONSULTANT is being paid in advance for the maintenance of equipment, software or a service as a subscription, then pursuant to IC § 4-13-2-20(b) (14), the CONSULTANT agrees that if it fails to fully provide or perform under this Contract, upon receipt of written notice from the LPA, it shall promptly refund the consideration paid, pro-rated through the date of non-performance.

30. **Penalties/Interest/Attorney's Fees**. The LPA will in good faith perform its required obligations hereunder and does not agree to pay any penalties, liquidated damages, interest or attorney's fees, except as permitted by Indiana law, in part, IC § 5-17-5, IC § 34-54-8, IC § 34-13-1 and IC § 34-52-2.

Notwithstanding the provisions contained in IC § 5-17-5, any liability resulting from the LPA's failure to make prompt payment shall be based solely on the amount of funding originating from the LPA and shall not be based on funding from federal or other sources.

31. **Pollution Control Requirements**. If this Contract is for $100,000 or more, the CONSULTANT:

i. Stipulates that any facility to be utilized in performance under or to benefit from this Contract is not listed on the Environmental Protection Agency (EPA) List of Violating Facilities issued pursuant to the requirements of the Clean Air Act, as amended, and the Federal Water Pollution Control Act, as amended;

ii. Agrees to comply with all of the requirements of section 114 of the Clean Air Act and section 308 of the Federal Water Pollution Control Act, and all regulations and guidelines issued thereunder; and

iii. Stipulates that, as a condition of federal aid pursuant to this Contract, it shall notify INDOT and the Federal Highway Administration of the receipt of any knowledge indicating that a facility to be utilized in performance under or to benefit from this Contract is under consideration to be listed on the EPA Listing of Violating Facilities.

32. **Renewal Option**. This Contract may be renewed under the same terms and conditions. The term of the renewed contract may not be longer than the term of the original Contract.

33. **Severability**. The invalidity of any section, subsection, clause or provision of this Contract shall not affect the validity of the remaining sections, subsections, clauses or provisions of this Contract.

34. **Status of Claims**. The CONSULTANT shall give prompt written notice to the LPA any claims made for damages against the CONSULTANT resulting from Services performed under this Contract and shall be responsible for keeping the LPA currently advised as to the status of such claims. The CONSULTANT shall send notice of claims related to work under this Contract to:

Mr. Jeromy Grenard, PE
Lafayette Engineer and Public Works Director
20 N. 6th Street
Lafayette, IN 47901

35. **Sub-consultant Acknowledgement.** The CONSULTANT agrees and represents and warrants to the LPA, that the CONSULTANT will obtain signed sub-consultant Acknowledgement forms, from all sub-consultants providing Services under this Contract or to be compensated for Services through this Contract. T he CONSULTANT agrees to provide signed originals of the sub-consultant Acknowledgement form(s) to the LPA for approval prior to performance of the Services by any sub-consultant.

36. **Substantial Performance**. This Contract shall be deemed to be substantially performed only when fully performed according to its terms and conditions and any written amendments or supplements.

37. **Taxes**. The State is exempt from most state and local taxes and many federal taxes. The LPA will not be responsible for any taxes levied on the CONSULTANT as a result of this Contract.

38. **Termination for Convenience.**

A. This Contract may be terminated, in whole or in part, by the LPA, whenever, for any reason, the LPA determines that such termination is in its best interest. Termination of services shall be effected by delivery to the CONSULTANT of a Termination Notice at least thirty (30) days prior to the termination effective date, specifying the extent to which performance of services under such termination becomes effective. The CONSULTANT shall be compensated for services properly rendered prior to the effective date of termination. The LPA will not be liable for services performed after the effective date of termination. The CONSULTANT shall be compensated for services herein provided but in no case shall total payment made to the CONSULTANT exceed the original contract price or shall any price increase be allowed on individual line items if canceled only in part prior to the original termination date.

B. If the LPA terminates or partially terminates this Contract for any reason regardless of whether it is for convenience or for default, then and in such event, all data, reports, drawings, plans, sketches, sections and models, all specifications, estimates, measurements and data pertaining to the project, prepared under the terms or in fulfillment of this Contract, shall be delivered within ten (10) days to the LPA. In the event of the failure by the CONSULTANT to make such delivery upon demand, the CONSULTANT shall pay to the LPA any damage (including costs and reasonable attorneys' fees and expenses) it may sustain by reason thereof.

39. Termination for Default.

A. With the provision of thirty (30) days' notice to the CONSULTANT, the LPA may terminate this Contract in whole or in part if the CONSULTANT fails to:

1. Correct or cure any breach of this Contract; the time to correct or cure the breach may be extended beyond thirty (30) days if the LPA determines progress is being made and the extension is agreed to by the parties;
2. Deliver the supplies or perform the services within the time specified in this CONSULTANT or any extension;
3. Make progress so as to endanger performance of this Contract; or
4. Perform any of the other provisions of this Contract.

B. If the LPA terminates this Contract in whole or in part, it may acquire, under the terms and in the manner the LPA considers appropriate, supplies or services similar to those terminated, and the CONSULTANT will be liable to the LPA for any excess costs for those supplies or services. However, the CONSULTANT shall continue the work not terminated.

C. The LPA shall pay the contract price for completed supplies delivered and services accepted. The CONSULTANT and the LPA shall agree on the amount of payment for manufacturing materials delivered and accepted and for the protection and preservation of the property. Failure to agree will be a dispute under the Disputes clause. The LPA may withhold from these amounts any sum the LPA determines to be necessary to protect the LPA against loss because of outstanding liens or claims of former lien holders.

D. The rights and remedies of the LPA in this clause are in addition to any other rights and remedies provided by law or equity or under this Contract.

E. Default by the LPA. If the CONSULTANT believes the LPA is in default of this Contract, it shall provide written notice immediately to the LPA describing such default. If the LPA fails to take steps to correct or cure any material breach of this Contract within sixty (60) days after receipt of such written notice, the CONSULTANT may cancel and terminate this Contract and institute the appropriate measures to collect monies due up to and including the date of termination, including reasonable attorney fees and expenses, provided that if such cure is not reasonably achievable in such time, the LPA shall have up to one hundred twenty (120) days from such notice to effect such cure if the LPA promptly commences and diligently pursues such cure as soon as practicable. The CONSULTANT shall be compensated for Services properly rendered prior to the effective date of such termination. The CONSULTANT agrees that it has no right of termination for non-material breaches by the LPA.

40. Travel. No expenses for travel will be reimbursed unless specifically authorized by this Contract. Permitted expenses will be reimbursed at the rate paid by the State and in accordance with the Budget Agency's *Financial Management Circular – Travel Policies and Procedures* in effect at the time the expenditure is made. Out-of-state travel requests must be reviewed by the LPA for availability of funds and for conformance with *Circular* guidelines.

41. **Waiver of Rights.** No right conferred on either party under this Contract shall be deemed waived, and no breach of this Contract excused, unless such waiver is in writing and signed by the party claimed to have waived such right. Neither the LPA's review, approval or acceptance of, nor payment for, the services required under this Contract shall be construed to operate as a waiver of any rights under this Contract or of any cause of action arising out of the performance of this Contract, and the CONSULTANT shall be and remain liable to the LPA in accordance with applicable law for all damages to the LPA caused by the CONSULTANT's negligent performance of any of the services furnished under this Contract.

42. **Work Standards/Conflicts of Interest.** The CONSULTANT shall understand and utilize all relevant INDOT standards including, but not limited to, the most current version of the Indiana Department of Transportation Design Manual, where applicable, and other appropriate materials and shall perform all Services in accordance with the standards of care, skill and diligence required in Appendix "A" or, if not set forth therein, ordinarily exercised by competent professionals doing work of a similar nature utilizing the highest professional and technical guidelines and standards.

43. **No Third-Party Beneficiaries.** This Agreement is solely for the benefit of the parties hereto. Other than the indemnity rights under this Contract, nothing contained in this Agreement is intended or shall be construed to confer upon any person or entity (other than the parties hereto) any rights, benefits or remedies of any kind or character whatsoever.

[Remainder of Page Intentionally Left Blank]

Non-Collusion.

The undersigned attests, subject to the penalties for perjury, that he/she is the CONSULTANT, or that he/she is the properly authorized representative, agent, member or officer of the CONSULTANT, that he/she has not, nor has any other member, employee, representative, agent or officer of the CONSULTANT, directly or indirectly, to the best of his/her knowledge, entered into or offered to enter into any combination, collusion or agreement to receive or pay, and that he/she has not received or paid, any sum of money or other consideration for the execution of this Contract other than that which appears upon the face of this Contract. **Furthermore, if the undersigned has knowledge that a state officer, employee, or special state appointee, as those terms are defined in IC §4-2-6-1, has a financial interest in the Contract, the Party attests to compliance with the disclosure requirements in IC §4-2-6-10.5.**

In Witness Whereof, the CONSULTANT and the LPA have, through duly authorized representatives, entered into this Contract. The parties having read and understand the forgoing terms of this Contract do by their respective signatures dated below hereby agree to the terms thereof.

CONSULTANT
BUTLER, FAIRMAN and SEUFERT, INC.

Chris W. Wheatley

Signature
Chris Wheatley
Vice President

Attest:

Signature
Mindy Miller, 1st Deputy Clerk

LOCAL PUBLIC AGENCY
CITY OF LAFAYETTE BOARD OF WORKS

Signature
Gary Henriott, President

Signature
Cindy Murray, Member

Signature
Norm Childress, Member

Signature
Ron Shriner, Member

Signature
Amy Moulton, Member

Date:

APPENDIX "A"

SERVICES TO BE FURNISHED BY CONSULTANT:

In fulfillment of this Contract, the CONSULTANT shall comply with the requirements of the appropriate regulations and requirements of the Indiana Department of Transportation and Federal Highway Administration.

The CONSULTANT shall be responsible for performing the following activities:

Project Description:

A. Project Limits on South 9th Street are from Brick N Wood Drive to the north side of Veterans' Memorial Parkway.

Proposed improvements include:

1. Roadway reconstruction to provide two travel lanes of traffic (one in each direction, approximately 0.92 mile in length) with a center two-way left turn lane (no raised medians)
2. Intersection improvements at South 9th Street and Ortman Lane
3. Concrete curb and gutter
4. Concrete drive approaches
5. Multi-use trail throughout the length of South 9th Street from the Brick N Wood Drive intersection to Veterans' Memorial Parkway
6. Sidewalk on the opposite side of multi-use trail along South 9th Street from Brick N Wood Drive to Ortman Lane; constraints will be assessed to determine if segments of sidewalk are feasible south of Ortman Lane to Veterans' Memorial Parkway
7. PROWAG compliant curb ramps
8. Coordination with LPA and Amelia Earhart Elementary School
9. Storm sewer that will utilize existing outlet locations and storm sewer trunklines, where feasible and present in the northern section of the project
10. Pedestrian scale LED lighting
11. Pedestrian traffic signal heads, accessible push buttons and PROWAG compliant curb ramps at the intersection of South 9th Street and Veterans' Memorial Parkway

The CONSULTANT shall be responsible for performing the following activities:

Services by the CONSULTANT:

B. SURVEY AND FIELD DATA COLLECTION:

1. Complete level circuit and Topographic Field Survey
2. Topographic information will be collected within the proposed project limits to facilitate an accurate design and as a minimum the survey will include location of grade breaks, roads, drives, sidewalks, tree lines, mailboxes, face of buildings, fire hydrants, visible evidence of wells, overhead & buried utilities as marked by I UPPS, and storm & sanitary structures with depth measurements.

3. The Field survey data shall be in conformance with the requirements of Title 865 IAC 1-12 and will be integrated with the United States Public Land System as based on the Indiana Geospatial Coordinate System (InGCS) for Tippecanoe County.
4. Benchmarks will be established, and descriptions provided for or adjacent to the proposed site at a minimum of four (4) locations. Datum will be NAVD 88.
5. Research will be conducted for current land owner deeds, plats, surveys, and previous project plans to determine current ownership, addresses, approximate property line locations, and apparent street right-of-ways within the project limits.
6. Underground utilities and features will be located based upon above ground markings provided by others. No independent investigation of subsurface features or environmental conditions will be performed.

C. ENVIRONMENTAL SERVICES:

The environmental services required to develop this project shall meet the National Environmental Policy Act of 1969 (NEPA) regulations and, as appropriate, latest versions of the NEPA and the Indiana Department of Transportation (INDOT) Decision Making Process, INDOT Procedural Manual for Preparing Environmental Documents, INDOT Categorical Exclusion Manual.

The environmental document completed for this project will be coordinated, as required, with the Environmental Scoping Manager at the INDOT Crawfordsville District, the INDOT Office of Environmental Services, and the Federal Highway Administration.

The CONSULTANT shall provide the following services and environmental documentation:

1. Public Involvement:

a. If the project meets the minimum requirements for Public Involvement per the current *Indiana Department of Transportation (INDOT) Public Involvement Manual*, the CONSULTANT shall prepare and advertise a legal notice offering the public the opportunity to request a Public Hearing. If no requests are forthcoming prior to the established deadline date, the CONSULTANT shall obtain Public Involvement Certification from the Public Hearings Section at INDOT prior to receiving final environmental document approval.

b. If limited requests for a Public Hearing are received or it is determined by the CONSULTANT that the comments received could be adequately answered by meeting with those respondents, a Public Meeting will be organized and held to answer their specific questions. Minutes of the Public Meeting will be taken along with a list of attendees. All comments made in the Public Meeting will be answered and submitted to the INDOT Public Hearings Section for Public Involvement Certification prior to receiving final environmental document approval.

c. If a Public Hearing is required, or the LPA desires to hold a Public Hearing, the CONSULTANT shall prepare and advertise a legal notice, coordinate, and prepare a Public Hearing. After the Public Hearing is held, the CONSULTANT will prepare a transcript and comment/response sheets. Subsequent to the requirements of the Public Hearing, the CONSULTANT shall obtain Public Involvement Certification from the

INDOT Public Hearings Section prior to receiving final environmental document approval.

2. Red Flag Investigation.

3. USFWS Coordination via IPaC web application (for bats)

4. Early coordination with various required local, state and federal agencies.

5. Project corridor impact evaluation including:

   a. Waters Report and wetland determination/delineation, if required
   b. Ecological Evaluation Form
   c. Threatened and endangered species review
   d. Karst, Sole Source Aquifers, Wellhead Protection Areas, Ground Water, Surface Water and Drinking Water reviews.
   e. Floodplain review
   f. Farmland review and completion of the Farmland Conversion Impact Rating form (NRCS-CPA-106) for corridor type projects.
   g. Section 6(f) (Land and Water Conservation Fund) and Section 4(f) (public park and recreation land, wildlife and waterfowl refuges and historic properties) reviews.
   h. Identification and recording of existing documentation in regards to the criteria air pollutants and the conformity status of the project in addition to identifying additional requirements beyond conformity (hot spot analyses and mobile source air toxics analyses) that may be applicable.
   j. Community impacts, Indirect and Cumulative Impacts, Relocation Studies.
   k. Determination of the Regulatory Permits required for the project.

6. Section 106 Consultation including, as appropriate,

   a. Historic Property Report
   b. Coordination with Consulting Parties
   c. Archaeological Field Reconnaissance, Phase Ia (to be performed by N/S Services)
   c. Preparation of 36 CFR 800.11(d) ("No Historic properties Effected") or 800.11 (e) ("No Adverse Effect") based upon results of the Historic Property Report and consultation with the State Historic Preservation Officer (SHPO), the Indiana Department of Transportation (INDOT) Cultural Resources Section (CRS) and other consulting parties.

7. Waterway Permits
   a. IDEM 401 / USACE 404 Permits (Regional General Permit Notification Form)
   b. IDNR Construction in a Floodway Permit (roadway approach work within the regulated floodway of Elliot Ditch)

Items not included in the above descriptions include the following:

1. Tree, wetland or stream mitigation plans.
3. Section 106 documentation, meetings or the advertising of legal notices for an "Adverse Effect" finding pursuant to 36 CFR 800.11(e), (f) or (g).

4. Preparation of a Memorandum of Agreement associated with 36 CFR 800.11 (e) for an "Adverse Effect".
5. Noise analysis.
6. Endangered species studies or reports.
7. Archaeological studies beyond a Phase la reconnaissance.
8. Completion of a Phase I or II Environmental Site Assessment to determine specific contamination.

These items will constitute a change of scope and will be paid for either under Additional Services or as a lump sum fee.

D. UTILITY COORDINATION & RAILROAD SERVICES

UTILITY COORDINATION

The CONSULTANT shall perform utility coordination which shall include the following in accordance with 105 IAC 13 "Utility Facility Relocation on Construction Contracts" for INDOT and federal-aid local projects:

1. Initiate contact with INDOT Railroad Oversight Agent to coordinate approval for no railroad involvement certification.
2. Finalize coordination with INDOT Railroad Oversight Agent with final plans and MOT for no railroad involvement certification.
3. Prepare, route for approval, and coordination completion of railroad coordination certification form.
4. Input information into the INDOT Utility Tracking Application (UTA) as needed throughout the utility coordination process to keep UTA updated, and coordinate with INDOT Oversight Agent staff as necessary.
5. Perform IUPPS 811 Design Ticket and area research to determine utilities in the area of the project
6. Send out Initial Notice Letters for preliminary contact to all utilities, both public and private, to establish: a point of contact, the location of the utilities facilities within the field survey limits, and documentation of reimbursable property interests if any.
7. Send out Verification of Existing Facility Letters and plans to all utilities, review response information as they are obtained and update / coordinate the update of the project topographical information.
8. Notify utilities of the preliminary field check meeting and attend to discuss both locations of existing facilities shown on the plans and potential conflicts between the utilities and the proposed project.
9. Send out Conflict Analysis Letters to all utilities with revised plans and utility information based on responses from Verification of Existing Facilities and discussions at the Preliminary Field Check to verify any remaining conflicts with the proposed improvements for the project.
10. Prepare SUE plans for use by the provider and coordinate to ensure their efforts cover the SUE scope.
11. Supervise all SUE efforts to collect data on the exact location and elevation of the existing utilities chosen to be potholed with the LPA, utilities, and subcontractor.
12. Review providers SUE submittal information

13. Coordinate incorporation of necessary SUE information into project plans and specifications
14. Send out Preliminary Final Plans, Requests for Work Plans Letters and Work Plan Documents to each utility. AutoCAD files will be prepared and sent to utilities upon request.
15. Review Utility Relocation Work Plans and Relocation Drawings for possible conflicts with the proposed improvements for the project, and for conflicts between additional utilities and their proposed relocations.
16. Coordinate a final utility coordination meeting if necessary to discuss utility relocations with all relevant utilities.
17. Prepare, route and coordinate any agreements necessary for utility relocations.
18. Prepare utility coordination certification, utility special provision, utility relocation Gantt chart for final submittals.
19. Issue all approved work plan and notice to proceed letters to the utilities unless otherwise directed by the LPA or INDOT.

UTILITY COORDINATION CONSTRUCTION PHASE

The CONSULTANT shall perform utility coordination during relocations or construction phase which shall include the following in accordance with 105 IAC 13 "Utility Facility Relocation on Construction Contracts" for INDOT and federal-aid local projects:

1. Assist in coordination the completion of utility relocation dependency items by others (such as staking of the right-of-way, clearing, grubbing, etc.) with the parties performing the work to ensure it is completed in a timely fashion to allow utility relocations to be completed on time.
2. Follow-up with utilities throughout their relocation timelines to keep up-to-date on completion dates.
3. Attend the project pre-construction meeting.
4. Attend field meetings and or utility related conference calls.
5. Remain active throughout construction as needed for unforeseen conditions.

SUBSURFACE UTILITY INVESTIGATION AND QUALITY LEVEL B (QL-B) LOCATES (SUBCONSULTANT)

The CONSULTANT shall make or cause to be made a complete subsurface utility investigation including potholing and location services to identify the projects known conflict points and missing utility location information needed to complete the project and complete quality level B (QL-B) utility location survey including information identified through standard utility locate practices or ground penetrating radar (GPR) of buried utilities within the limits of the project.

E. UTILITY COORDINATION SURVEY ASSISTANCE

UTILITY RELOCATION STAKING

The CONSULTANT shall perform staking of the right-of-way, proposed structures, or other design items necessary for utilities to perform their relocation prior to the contract being let on an as needed basis for the hourly not to exceed amount established in Appendix D.

SUBSURFACE UTILITY ENGINEERING (SUE) SURVEY

The CONSULTANT shall also coordinate sending a survey crew back onsite to pick up exact locations and elevations of the potholed utilities, then add that information to the plans. This

work will be performed on an as needed basis for the hourly not to exceed amount established in Appendix D.

EXISTING UTILITY SURVEY
The CONSULTANT shall submit Indiana 811 tickets to get existing utilities located throughout the project limits in specific areas of concern due for design and utility coordination purposes in the event that utility was not marked for original topographic survey, or additional information is needed, which would require additional site visits for survey collection.

E. DESIGN AND PLANS:

1. Project Limits are on South 9th Street from Brick N Wood Lane to Veterans Memorial Parkway.

2. The CONSULTANT shall prepare conceptual design plans, including three typical sections and layouts for three intersection scenarios at South 9th Street and Ortman Lane, to assist the LPA in determining preferred design elements and associated project impacts.
   Following the conceptual design phase, the CONSULTANT shall preliminary plans and preliminary estimates of cost, which shall be in accordance with the accepted standards for such work and in accordance with the following documents in effect at the time the plans or reports are submitted: Chapter 7 (Plan Preparation) of the "INDOT LPA Guidance Document for Local Federal-Aid Projects" (latest revision), INDOT 3-R Design Standards, American Association of State Highway and Transportation Officials "A Policy on Geometric Design of Highways and Streets", Indiana Department of Transportation's Standard Specifications, Road and Bridge Memoranda and Road and Bridge Design Manuals except as modified by supplemental specifications and special provisions, if any, and shall be completed to the point required to fulfill the requirements for a Public Involvement, no further work shall be done on the plans, unless and until specifically directed by the LOCAL PUBLIC AGENCY.

3. Preliminary Field Check Plans and Meeting: The CONSULTANT shall prepare necessary information and conduct a Preliminary Field Check.

4. The CONSULTANT shall prepare Preliminary and Final Storm water drainage design within the project limits of the project.

5. Final Right-of-Way Plan and Submittal: T he CONSULTANT shall submit Final Right-of-Way plans to the LPA for review and approval.

6. Final Tracings Submittal and Review: Following receipt of the public hearing certification, the CONSULTANT shall complete the final contract plans (Final Tracings), special provisions (recurring and unique), final opinions of probable construction costs, and all other necessary documents, reports and calculations. T he opinion of probable construction cost shall be prepared according to the current practices of the INDOT and shall include all items of work required for the complete construction of the work, including all temporary work necessary in connection therewith, but shall not include the cost of such items of work for which the LOCAL

PUBLIC AGENCY, through its own forces or through other party or parties will prepare detail plans. The unit prices to be used shall be in accordance with the methods used by the INDOT. The CONSULTANT shall submit Final Tracings Plans to the LPA and INDOT for review and approval.

7. Final Package Submittal: The CONSULTANT shall submit to INDOT all required documentation for the Final Package Submission.

8. Bid Assistance: The CONSULTANT shall provide contract document and bid assistance to INDOT and the LPA, including review of INDOT's Contract Information Book and addressing contractor inquiries.

9. The CONSULTANT shall assist the LPA in obtaining permits and approvals for the Rule 5/ Erosion Control plans from the Indiana Department of Environmental Management.

Items not included in the above descriptions, but can be provided under a supplemental agreement, include the following:

1. Documentation and submittal for Level 1 Design Exceptions necessitating a Stage 1 submittal.
2. Stage 2 Submittal.
3. Railroad coordination
4. Utility relocation design

F. GEOTECHNICAL INVESTIGATION

The CONSULTANT shall make or cause to be made a complete Geotechnical Investigation in accordance with "Requirements for Geotechnical Investigations" dated 1 November 1984. For bridge structures, the CONSULTANT shall make or cause to be made all the necessary borings and subsurface explorations and the analysis thereof in accordance with "General Instructions for Bridge Structure Investigations", dated 1 June 1984. Copies of both are on file with INDOT and the documents are incorporated herein by reference and is made a part hereof. Borings shall extend sufficiently in depth to obtain characteristic data for the proper design of the foundation. In the event more extensive boring, sampling, and testing is needed, a supplemental agreement shall be executed to pay for the additional work. The Consultant shall backfill bore holes or cause to be backfilled in accordance with "Aquifer Protection Guidelines' dated December 9, 1987. A copy of the document is on file with the INDOT, Division of Materials and Tests, Geotechnical section.

G. PAVEMENT DESIGN

The CONSULTANT shall make or cause to be made a pavement design in accordance with INDOT the latest INDOT requirements.

H. Upon completion and final approval of the work by the LOCAL PUBLIC AGENCY, the CONSULTANT shall deliver to the LOCAL PUBLIC AGENCY the following, which shall become the property of the LOCAL PUBLIC AGENCY:

1. Set of final approved tracings of the contract plans drawn to a suitable scale on standard 36" x 23" sheets prepared in Adobe Acrobat® .pdf format (latest version at the time of completion of the plans) on CD-ROM.

2. Set of Special Provisions for the Specifications in Adobe Acrobat® .pdf format (latest version at the time of completion of the plans) on CD-ROM.

3. Copy of the construction cost estimates in Adobe Acrobat® .pdf format (latest version at the time of completion of the plans) on CD-ROM.

4. Copy all design computations, Indexed, Paged and Bound in Adobe Acrobat® .pdf format (latest version at the time of completion of the plans) on CD-ROM.

I. The CONSULTANT shall attend all such conferences with the officials of the LOCAL PUBLIC AGENCY and other interested agencies as may be required in connection with the work and to make his services available to the LOCAL PUBLIC AGENCY during construction of the work for the interpretation of the plans where disagreement may arise and for consultation during construction in the event unforeseen or unusual conditions may arise.

J. Additional general data shall be issued at the mutual agreement of the CONSULTANT and the LOCAL PUBLIC AGENCY. The CONSULTANT does not authorize or assume liability for any reuse of the documents or digital materials described in this section for any purpose other than this project and the specific use intended, unless adapted by and approved by the CONSULTANT.

K. RIGHT OF WAY ENGINEERING

1. The CONSULTANT shall provide RIGHT-OF-WAY ENGINEERING for an estimated 19 fee parcels and 10 temporary parcels in accordance with the procedures and standards as indicated in the Indiana Department of Transportation, Land Acquisition Division, Right-of-Way Engineering Procedures Manual including the following:
2. Prepare any necessary single parcel Right-of-Way Exhibits, including, but not limited to, right-of-entry exhibits.
3. Prepare Right-of-Way Engineering Plans.
4. Provide a documented 20-year title search (T&E Report) for each parcel prepared by an abstractor as approved by the Indiana Department of Transportation (INDOT).
5. Provide legal descriptions and land plats for each fee parcel prepared and certified by an Indiana Registered Surveyor and transfer documents.
6. Provide legal descriptions for each temporary parcel prepared and certified by an Indiana Registered Surveyor and transfer documents.
7. Provide updated T&E reports if necessary.
8. Provide an Appraisal Problem Analysis (APA) for each parcel prepared by an appraiser as approved by INDOT.
9. Complete a Location Control Route Survey Plat for the project limits
10. Physical monumentation will be established as necessary to acquire Right of Way for this project in accordance with Title 865 IAC 1-12
11. Parcel staking for land acquisition, once per parcel.

APPENDIX "B"

INFORMATION AND SERVICES TO BE FURNISHED BY THE LPA:

The LPA shall furnish the CONSULTANT with the following:

1. Criteria for design and details for signs, signals, lighting, highway and structures such as grades, curves, sight distances, clearances, design loading, etc.
2. Standard Specifications and standard drawings applicable to the project
3. Plans of existing bridge within the project limits
4. All written views pertinent to the location and environmental studies that are received by INDOT
5. Traffic assignments, Traffic Signal Warrants (New Signal), Traffic Lighting Warrants (New Lighting)
6. Necessary permit forms and permit processing (US Army Corps of Engineers, US Coast Guard, and/or Indiana Department of Natural Resources)
7. Available data from the transportation planning process
8. Utility plans available to INDOT covering utility facilities govern the location of signals and underground conduits throughout the affected areas
9. Provide access to enter upon public and private lands as required for the CONSULTANT to perform work under this Contract
10. Aerial Survey information
11. Existing water quality data
12. Laboratory tests for pavement investigation
13. Pavement design analysis
14. Geotechnical investigation, if applicable

APPENDIX "C"

SCHEDULE:

No work under this Contract shall be performed by the CONSULTANT until the CONSULTANT receives a written notice to proceed from the LPA.

All work by the CONSULTANT under this Contract shall be completed and delivered to the LPA for review and approval within the approximate time periods shown in the following submission schedule (based on an assumed Letting date of 1/15/2025):

A.	Survey and Field Data Collection	110 days from Notice to Proceed
B.	Environmental Services a. Draft Environmental Document approved by INDOT and available for release to the public within 360 days after Notice to Proceed. b. Public Involvement requirements certified within 105 calendar days after approval of the Draft Environmental Document. c. Final Environmental Document approval within 45 days after receipt of Public Involvement certification.	
C.	Field Check Held	380 days from Notice to Proceed
D.	Right of Way Engineering	90 days from Field Check
E.	Stage 3 Submission	August 23, 2024 - 75 days prior to RFC
F.	Final Tracing Submission	October 7, 2024 - 30 days prior to RFC

APPENDIX "D"

Compensation:

A. Amount of Payment

1. The CONSULTANT shall receive as payment for the services performed under this Agreement the total fee, not to exceed $ 726,580.00 unless a modification of the Agreement is approved in writing by the LOCAL PUBLIC AGENCY.

2. The CONSULTANT will be paid for the work performed under this agreement on a lump sum basis in accordance with the following schedule:

a.	Survey and Field Data Collection	$ 38,700.00
b.	Environmental Document	$ 37,600.00
c.	Public Involvement Process	
	1. Public Information Meeting	$ 6,800.00
	2. Public Hearing and Transcript	$ 14,200.00
d.	Waters Permits	$ 7,800.00
e.	Utility Coordination	$ 15,600.00
f.	Utility Coordination Construction Phase	$ 6,900.00
g.	Design and Plans	$ 369,400.00
	SUBTOTAL	**$ 497,000.00**

3. The CONSULTANT will be paid Unit Rates for the Right-of-Way Engineering services performed under this Agreement in accordance with the following schedule:

	Quantity	Unit Price	Total
Right-Of-Way Plans	1 EACH	$ 9,800.00	$ 9,800.00
T&E Reports	19 EACH	$ 400.00	$ 7,600.00
Fee Parcel Legals, Land Plats, & Transfer Documents	19 EACH	$ 2,350.00	$ 44,650.00
Temp Parcel Legals & Transfer Documents	10 EACH	$ 1,890.00	$ 18,900.00
T&E Updates	19 EACH	$ 100.00	$ 1,900.00
Parcel Staking	29 EACH	$ 190.00	$ 5,510.00
Appraisal Problem Analysis	29 EACH	$ 250.00	$ 7,250.00
Location Control Route Survey Plat	1 EACH	$ 6,500.00	$ 6,500.00
		SUBTOTAL	**$ 102,110.00**

4. The LOCAL PUBLIC AGENCY agrees to compensate the CONSULTANT for On-Call Additional Services on the basis of actual hours of work performed on the project at the hourly billing rates noted in APPENDIX "D-1". The Hourly Billing Rates include overhead and fixed fee. The CONSULTANT will be paid for the following work under additional services, or on a fixed fee basis, in accordance with the following schedule:

a.	Utility Relocation Staking	$	3,100.00
b.	SUE Survey	$	3,600.00
c.	Existing Utility Survey	$	2,000.00
d.	Construction Observation	$	15,000.00
	SUBTOTAL	**$**	**23,700.00**

5. The CONSULTANT shall be reimbursed for direct project-related expenses. Subconsultant reimbursable expenses will be invoiced at cost with no mark-up. Estimated reimbursable expenses are:

a.	Archaeological Investigation (NS Services)	$	3,650.00
b.	Subsurface Utility Investigation & QL-B Locates	$	20,775.00
b.	Geotechnical Investigation and Report (GeoSolutions, Inc.)	$	35,000.00
c.	Pavement Design Services (Resource International, Inc.)	$	15,845.00
d.	Erosion Control Design/ Rule 5 Permit (Resolution Group)	$	13,500.00
	SUBTOTAL	**$**	**88,770.00**
	TOTAL	**$**	**726,580.00**

6. The CONSULTANT shall not be paid for any service performed by the LOCAL PUBLIC AGENCY or services not required to develop this project. Costs for routine photocopy and paper reproduction, cellular phone costs, pager costs and computer time costs will not be paid as a reimbursable but is to be included in the above fees and overhead costs.

B. Method of Payment:

1. The CONSULTANT may submit a maximum of one invoice voucher per calendar month for work covered under this Agreement. The invoice voucher shall be submitted to the LOCAL PUBLIC AGENCY. The invoice voucher shall represent the value, to the LOCAL PUBLIC AGENCY, of the partially completed work as of the date of the invoice voucher. The CONSULTANT shall attach thereto a summary of each pay item in Section A of this Appendix, percentage completed and prior payments in a form acceptable to the LOCAL PUBLIC AGENCY.

2. The LOCAL PUBLIC AGENCY for and in consideration of the rendering of the engineering services provided for in Appendix "A", agrees to pay the CONSULTANT for rendering such services the fee established above upon completion of the work thereunder, acceptance thereof by the LOCAL PUBLIC AGENCY and upon the CONSULTANT submitting an invoice as described above.

3. In the event of a substantial change in the scope, character or complexity of the work on the project, the maximum fee payable and the specified fee shall be adjusted in accordance with Section VI, 6 (changes in work), as set out in this Agreement.

APPENDIX "D-1"

SCHEDULE OF COMPENSATION

BUTLER, FAIRMAN and SEUFERT, INC.

2020 HOURLY RATE SCHEDULE

Classification		Hourly Rates
E-V	Engineer V (Principal)	$ 235.00
E-IV	Engineer IV	$ 194.00
E-III	Engineer III	$ 168.00
E-II	Engineer II	$ 128.00
E-I	Engineer I	$ 95.00
FP-IV	Field Personnel IV – (Project Coordinator)	$ 180.00
FP-III	Field Personnel III	$ 143.00
FP-II	Field Personnel II	$ 112.00
FP-I	Field Personnel I	$ 87.00
EA-III	Engineer's Assistant III	$ 173.00
EA-II	Engineer's Assistant II	$ 141.00
EA-I	Engineer's Assistant I	$ 95.00
SP-1	Support Personnel I	$ 66.00
C-II	Clerical II	$ 115.00
C-I	Clerical I	$ 75.00
P-III	Planner/Environmental Specialist III	$ 140.00
P-II	Planner/Environmental Specialist II	$ 100.00
P-I	Planner/Environmental Specialist I	$ 85.00

The billing rates are effective January 2020 and may be adjusted annually (beginning January 2021) to reflect changes in the compensation payable to the **ENGINEER**.

9th Street Lane Addition
Lafayette, IN
Legend
Prop. Survey Boundary
Twyckenham
Brick N Wood Dr
Fairfax Dr
Southport Dr
Bellingham Ave
N Southland Dr
Southland Dr S
Jersey Ln
Trafalgar Ct
Sibley Ln
Coventry Ln
Sussex Ln
Dover Ln
Dover Ct
Abbey Ln
Wales Ct
S 10th St
Norma Jean Dr
Sherwood Dr
Karin Ct
Normandy Dr
Brenner St
Norwegian Dr
Hanover Dr
Piper's Glen
Southaven Blvd
Karen Dr
S 11th St
S 12th St
Sherwood Dr S
Mulligan Way
Equinox Terrace
Teasdale Dr
Teasdale Ct
Victoria Ave
Sussex Ct
Liverpool Ct
Ortman Ln
E 300 S
Summertime Trail
Round Rock Cir
Thornhill Cir E
Joallen Ln
Sandra Ct
Golden Ln
Canterbury Dr
Surrey Ln
Old Farm Rd
Gate Rd
Thomas Dr
Newsom Dr
S 18th St
Chamberlin Dr
Phillips
Bridgewater Cir
Honeybrook Way
Claybrook Dr
N Southernview Dr
S Southernview Dr
Brookside Dr
Brooklawn Dr
Poland Hill
S 9th St
Waverly Dr
Tabor Ct
Troxel Dr
Braddock Dr
Veterans Memorial Pkwy S
2000 ft
N
BF&S
Butler Fairman Seufert
CIVIL ENGINEERS

MAN-HOUR JUSTIFICATION
ROADWAY PROJECT: 9th Street Road Widening, Trail Sidewalk
LAFAYETTE, IN

MAN-HOURS BY CLASSIFICATION - Topo										LABOR COSTS
DESCRIPTION	FP-IV	FP-III	FP-II	FP-I	FP-II	FP-I	EA-II	EA-III	C-I	PER TASK
Courthouse Research					6.0	6.0				$ 1,194.00
GIS Owner Research									2.0	$ 150.00
811 & Utility Coordination									4.0	$ 300.00
Horizontal Control Set & Ref. (est. 10)					8.0	8.0				$ 1,592.00
Vertical Control (BF&S Job 5968)					8.0	8.0				$ 1,592.00
PLS Corner Collections (est. 6)					4.0	4.0				$ 796.00
Storm & San. Structures (est. 15-20)					6.0	6.0				$ 1,194.00
Topo Survey (est. 800'/day)					64.0	64.0				$ 12,736.00
CL Alignment & Monumentation										$ -
Edit Electronic Fieldbook		6.0		40.0						$ 4,338.00
Create & Analyze Surface		4.0		20.0						$ 2,312.00
Pipe Network		2.0		6.0						$ 808.00
Drafting		2.0		16.0						$ 1,678.00
Property Lines		40.0		8.0						$ 6,416.00
Process Levels & Label Details		4.0		2.0						$ 746.00
Final Project Review		4.0								$ 572.00
Project Management		8.0								$ 1,144.00
Travel & prep					4.0	4.0				$ 796.00
										$ -
										$ -
										$ -
TOTAL HOURS	0.0	70.0	0.0	92.0	100.0	100.0	0.0	0.0	6.0	
Rate (2020)	180.0	143.0	112.0	87.0	112.0	87.0	141.0	173.0	75.0	
Direct Labor Rate	$41.12	$39.33	$29.32	$23.60	$45.19	$22.38	$39.89	$19.48	$21.45	
Direct Labor	$0.00	$2,753.10	$0.00	$2,171.20	$4,519.00	$2,238.00	$0.00	$0.00	$128.70	
Total Direct Labor	$11,810.00									
Overhead at 1.4316 Old = 1.5978	$16,907.20									
Total Direct Labor and Overhead	$28,717.20									
Fixed Fee	$4,307.58									
TOTAL LABOR COSTS	$33,024.78									$ 38,364.00

PROJECT INFORMATION		DIRECT EXPENSE					
Project:	9th Street, Lafayette	ITEM	Number	DISTANCE	RATE	AMOUNT	
County:	Tippecanoe	Travel to/from	12.0	10	$ 0.38	$ 91.20	
Des. No.:		Research				$ 250.00	
		Abstracting (on R/W estimate)				$ -	
Parcels:		Staking (on R/W estimate)				$ -	
		Appraisal Problem Analysis (NA)				$ -	
		TOTAL DIRECT EXPENSE				$ 341.20	
		TOTAL LABOR COST				$ 38,364.00	
		TOTAL FEE				$ 38,705.20	
		USE				$ 38,700.00	

MAN-HOUR JUSTIFICATION
9th Street Improvements
City of Lafayette
NEPA Documentation
4-9-2020

DESCRIPTION	MAN-HOURS BY CLASSIFICATION									Labor Costs Per Task
					P-III	P-II	P-I/INTERN		TOTAL HOURS	
Red Flag Investigation					2	20			22	$ 2,634.00
IPaC / USFWS Coordination						6			6	$ 684.00
Site Visit / Data Collection					8	8			16	$ 2,328.00
Early Coordination					2	20				$ 2,634.00
Section 106 Coordination and Documenation						115				$ 13,110.00
EJ Analysis						6				$ 684.00
Waters of the US Determination					8	8				$ 2,328.00
CE Level 2-4 Form / Graphics / Appendicies						60				$ 6,840.00
QC / QA of CE Level 2-4 Documentation					8					$ 1,416.00
Public Hearing Opportunity Request						4				$ 456.00
Project Commitments						4				$ 456.00
										$ -
										$ -
										$ -
										$ -
										$ -
										$ -
										$ -
TOTAL HOURS	0	0	0	0	28	251	0	0	279	$ 33,570.00
BILLABLE LABOR RATE					177.00	114.00	84.00			
Direct Labor	0	0	0	0	4956	28614	0	0		
TOTAL DIRECT LABOR	$ 33,570.00									

				TRIPS X	MILES/TRIP	$ 0.38	TOTAL			
		MILEAGE TO	SITE	1	120	$ 0.38	$ 45.60			
MILEAGE	$ 45.60		HPR / S. 106			$ 0.38	$ -			
			INDOT			$ 0.38	$ -			
COPYING / MATERIALS	$ 45.00		OTHER MTGS.			$ 0.38	$ -			
Public Notice Fees	$ 300.00	TOTAL					$ 45.60			
Archaeological Field Investigation (Phase Ia)	$ 3,650.00									
				PAGES	#COPIES	$ 0.25	TOTAL			
Direct Costs	$ 4,040.60	COPIES		30	6	$ 0.25	$ 45.00			
						$ 0.25	$ -			
						$ 0.25	$ -			
						$ 0.25	$ -			
TOTAL PROJECT COSTS	$ 37,610.60					$ 0.25	$ -			
						$ 0.25	$ -			
USE	$ 37,600.00	TOTAL					$ 45.00			

MAN-HOUR JUSTIFICATION
9th Street Improvements
City of Lafayette
Public Meeting
4-9-2020

DESCRIPTION	MAN-HOURS BY CLASSIFICATION									Labor Costs Per Task
					P-III	P-II	P-I/INTERN		TOTAL HOURS	
Assistance with Public Meeting Preparations					20				20	$ 3,540.00
Attend Public Meeting/Set Up/Prep					10				10	$ 1,770.00
Assistance with Summary Documentation					8				8	$ 1,416.00
										$ -
										$ -
										$ -
										$ -
										$ -
										$ -
										$ -
										$ -
										$ -
										$ -
										$ -
										$ -
										$ -
										$ -
										$ -
										$ -
TOTAL HOURS	0	0	0	0	38	0	0	0	38	$ 6,726.00
BILLABLE LABOR RATE					177.00	114.00	84.00			
Direct Labor	0	0	0	0	6726	0	0	0		
TOTAL DIRECT LABOR	$ 6,726.00									

				TRIPS X	MILES/TRIP	$ 0.38	TOTAL			
		MILEAGE TO	SITE	1	120	$ 0.38	$ 45.60			
MILEAGE	$ 45.60		HPR / S. 106			$ 0.38	$ -			
			INDOT			$ 0.38	$ -			
COPYING / MATERIALS	$ -		OTHER MTGS.			$ 0.38	$ -			
		TOTAL					$ 45.60			
				PAGES	#COPIES	$ 0.25	TOTAL			
Direct Costs	$ 45.60	COPIES				$ 0.25	$ -			
						$ 0.25	$ -			
						$ 0.25	$ -			
						$ 0.25	$ -			
TOTAL PROJECT COSTS	$ 6,771.60					$ 0.25	$ -			
						$ 0.25	$ -			
USE	$ 6,800.00	TOTAL					$ -			

MAN-HOUR JUSTIFICATION
9th Street Improvements
City of Lafayette
Public Hearing
4-9-2020

DESCRIPTION	MAN-HOURS BY CLASSIFICATION									
					P-III	P-II	P-I/INTERN		TOTAL HOURS	Labor Costs Per Task
Coordination with client on location/date					8				8	$ 1,416.00
Public Hearing Ad					4				4	$ 708.00
Prepare Presentation					16	8			24	$ 3,744.00
Attend Hearing					8	8				$ 2,328.00
Public Hearing Transcript					8					$ 1,416.00
Comments and Responses					16					$ 2,832.00
Hearing Certification					8					$ 1,416.00
										$ -
										$ -
										$ -
										$ -
										$ -
										$ -
										$ -
										$ -
										$ -
										$ -
										$ -
TOTAL HOURS	0	0	0	0	68	16	0	0	84	$ 13,860.00
BILLABLE LABOR RATE					177.00	114.00	84.00			
Direct Labor	0	0	0	0	12036	1824	0	0		
TOTAL DIRECT LABOR	$ 13,860.00									
				TRIPS X	MILES/TRIP	$ 0.38	TOTAL			
		MILEAGE TO	SITE	1	120	$ 0.38	$ 45.60			
MILEAGE	$ 45.60		HPR / S. 106			$ 0.38	$ -			
			INDOT			$ 0.38	$ -			
COPYING / MATERIALS	$ 125.00		OTHER MTGS.			$ 0.38	$ -			
Public Notice Fees	$ 150.00	TOTAL					$ 45.60			
				PAGES	#COPIES	$ 0.25	TOTAL			
Direct Costs	$ 320.60	COPIES		10	50	$ 0.25	$ 125.00			
						$ 0.25	$ -			
						$ 0.25	$ -			
						$ 0.25	$ -			
TOTAL PROJECT COSTS	$ 14,180.60					$ 0.25	$ -			
						$ 0.25	$ -			
USE	$ 14,200.00	TOTAL					$ 125.00			

MAN-HOUR JUSTIFICATION
9th Street Improvements
City of Lafayette
Water Permits
4-9-2020

DESCRIPTION	MAN-HOURS BY CLASSIFICATION									
					P-III	P-II	P-I/INTERN		TOTAL HOURS	Labor Costs Per Task
IDEM 401 WQC / USACE Regional General Permit No. 1					20				20	$ 3,540.00
IDNR Construction in a Floodway Permit					24				24	$ 4,248.00
									0	$ -
										$ -
										$ -
										$ -
										$ -
										$ -
										$ -
										$ -
										$ -
										$ -
										$ -
										$ -
										$ -
										$ -
										$ -
										$ -
TOTAL HOURS	0	0	0	0	44	0	0	0	44	$ 7,788.00
BILLABLE LABOR RATE					177.00	114.00	84.00			
Direct Labor	0	0	0	0	7788	0	0	0		
TOTAL DIRECT LABOR	$ 7,788.00									
				TRIPS X	MILES/TRIP	$ 0.38	TOTAL			
		MILEAGE TO	SITE	1	120	$ 0.38	$ 45.60			
MILEAGE	$ 45.60		HPR / S. 106			$ 0.38	$ -			
			INDOT			$ 0.38	$ -			
COPYING / MATERIALS	$ -		OTHER MTGS.			$ 0.38	$ -			
		TOTAL					$ 45.60			
				PAGES	#COPIES	$ 0.25	TOTAL			
Direct Costs	$ 45.60	COPIES				$ 0.25	$ -			
						$ 0.25	$ -			
						$ 0.25	$ -			
						$ 0.25	$ -			
TOTAL PROJECT COSTS	$ 7,833.60					$ 0.25	$ -			
						$ 0.25	$ -			
USE	$ 7,800.00	TOTAL					$ -			

MAN-HOUR JUSTIFICATION
SOUTH 9TH STREET RECONSTRUCITON - DES 1900482
BRICK N WOOD DRIVE TO VETERANS MEMORIAL PARKWAY
UTILITY COORDINATION SERVICES

DESCRIPTION: Hours	MAN-HOURS BY CLASSIFICATION											LABOR COSTS PER TASK
	E-V	E-IV	E-III	E-II	E-I	EA-III	EA-II	EA-I	FP-IV	FP-II	FP-I	
UTILITY COORDINATION												
Administration												
Input Initial information and keep UTA updated during project												
Coordination with INDOT Utility Staff during project												
Initial Notices and Utility Research												
Perform a 811 design ticket and contact utilities				2								$256.00
Perform area research				1								$128.00
Prepare, send, verify and receive initial notice letters				6								$768.00
Compile received utility inforamation for delivery to survey dept.				1								$128.00
Verification Phase												
Prepare, send (w/plans), verify and receive verification letter				2								$256.00
Review verification responses			1	6								$936.00
Update topo with reviewed verification response information							1					$141.00
Coordination additional field locates needed for missing utilities				2								
Field Check & Utility Coordination Meetings												
Set up and notify utilities of meeting				1								$128.00
Attend Meetings and site visits with utilities				8								$1,024.00
Coordinate potential design changes with utilities & PM				1								$128.00
Conflict Analysis												
Prepare, send and verify receipt of conflict review letter				2								$256.00
Review conflict responses with PM				6								$768.00
Coordinate potential design changes with utilities				4								$512.00
Constructability Review			1									$168.00
SUE Coordination and Review												
Coordinate SUE locations with utilities			2	4								$848.00
Onsite coordination for pothole and locating locations				6								$768.00
Review SUE results and discuss with PM			2	6								$1,104.00
Incorporate SUE information into project deliverables				4								$512.00
Work Plan Request, Coordination, and Approval												
Send letter requesting work plan and verify receipt				2								$256.00
Review work plans and coordinate updates				10								$1,280.00
Review relocation drawings and coordinate for compatability			2	8								$1,360.00
CAD file preparation for send-out to utilities							2					$282.00
Coordinate final utility coordination meeting												
Draft and send approved work plan notices				4								$512.00
Tracings Documents, Notice to Proceeds, Agreements												
Prepare utility coordination certification				2								$256.00
Prepare and update Utility Relocation Gantt Chart				2								$256.00
Prepare utility special provision			1	4								$680.00
Prepare and send out notice to proceeds				2								$256.00
Prepare, Route, Coordinate Agreement approvals			4	4								$1,184.00
Railroad Coordination (anticipating no involvement)												
Initiate contact with INDOT RxR Oversign Agent to discuss RxR non involvement				1								$128.00
Finalize RxR non involvment with INDOT after plan and MOT review				1								$128.00
Prepare, route for approval, and complete RR certification				2								$256.00
												$15,663.00
UTILITY COORDINATION DURING RELOCATIONS												
Prepare for and attend Pre-Construction meeting				6								$768.00
Coordinate completion of dependency items (staking, clearing, etc.)				4								$512.00
Follow-up with utilities during pre-const. and relocation process				16								$2,048.00
Notify relevant parties when utility relocations are complete				2								$256.00

MAN-HOUR JUSTIFICATION
SOUTH 9TH STREET RECONSTRUCITON - DES 1900482
BRICK N WOOD DRIVE TO VETERANS MEMORIAL PARKWAY
UTILITY COORDINATION SERVICES

DESCRIPTION:	Hours	MAN-HOURS BY CLASSIFICATION E-V	E-IV	E-III	E-II	E-I	EA-III	EA-II	EA-I	FP-IV	FP-II	FP-I	LABOR COSTS PER TASK
Attend field meetings and participate in utility related conf. calls				4	8								$1,696.00
Assist to resolve unforseen utility problems				4	8								$1,696.00
													$6,976.00
TOTAL HOURS		0	0	21	148	0	0	3	0	0	0	0	172
Hourly Rate		$235.00	$194.00	$168.00	$128.00	$95.00	$173.00	$141.00	$95.00	$180.00	$112.00	$87.00	
Direct Labor		$ -	$ -	$ 3,528.00	$ 18,944.00	$ -	$ -	$ 423.00	$ -	$ -	$ -	$ -	
TOTAL LABOR		$ 22,895.00											
TOTAL LABOR		$ 22,895.00											
SUBTOTAL		$ 22,895.00											
Expenses													
UC Mileage	10 mi @ $0.39 /mi X 4	$ 15.60											
SUE Mileage	10 mi @ $0.39 /mi X 3	$ 11.70											
Relo Mileage	10 mi @ $0.39 /mi X 6	$ 23.40											
TOTAL COST		$ 39.00											
USE: UTILITY COORDINATION		**$ 15,600.00**											
USE: UTILITY COORDINATION DURING RELOCATIONS		**$ 6,900.00**											

MAN-HOUR JUSTIFICATION
SOUTH 9TH STREET RECONSTRUCITON - DES 1900482
BRICK N WOOD DRIVE TO VETERANS MEMORIAL PARKWAY
UTILITY COORDINATION SURVEY ASSISTANCE

DESCRIPTION:	Hours	MAN-HOURS BY CLASSIFICATION E-V	E-IV	E-III	E-II	E-I	EA-III	EA-II	EA-I	FP-IV	FP-II	FP-I	LABOR COSTS PER TASK
UTILITY RELOCATION STAKING													
Coordinate staking locations and timing with field staff and utilities										4			$720.00
Perform onsite staking for utility relocations											12	12	$2,388.00
													$3,108.00
SUE SURVEY OF PROVIDER EFFORTS													
Coordinate SUE work taking place onsite										4			$720.00
Survey pickup of SUE work performed											8	8	$1,592.00
Process of SUE pickup data								4		4			$1,284.00
													$3,596.00
EXISTING UTILITY SURVEY													
Call in locate tickets								1					$141.00
Perform onsite survey (Assumes two trips max)											8	8	$1,592.00
Process of survey pickup data										2			$360.00
													$2,093.00
TOTAL HOURS		0	0	0	0	0	0	5	0	14	28	28	75
Hourly Rate		$235.00	$194.00	$168.00	$128.00	$95.00	$173.00	$141.00	$95.00	$180.00	$112.00	$87.00	
Direct Labor		$ -	$ -	$ -	$ -	$ -	$ -	$ 705.00	$ -	$ 2,520.00	$ 3,136.00	$ 2,436.00	
TOTAL LABOR		$ 8,797.00											
TOTAL LABOR		$ 8,797.00											
SUBTOTAL		$ 8,797.00											
Expenses													
Staking Mileage	10 mi @ $0.39 /mi X 2	$ 7.80											
SUE Mileage	10 mi @ $0.39 /mi X 3	$ 11.70											
Survey Mileage	0 mi @ $0.39 /mi X 0	$ -											
TOTAL COST		$ 19.50											

MAN-HOUR JUSTIFICATION
SOUTH 9TH STREET RECONSTRUCITON - DES 1900482
BRICK N WOOD DRIVE TO VETERANS MEMORIAL PARKWAY
SUBSURFACE UTILITY INVESTIGATION

DESCRIPTION: Hours	MAN-HOURS BY CLASSIFICATION											LABOR COSTS PER TASK
Subsurface Utility Investigation (SUI)												
Work performed by Sub-consultant providers as direct pass through												
Quality Level B Locates for sewer (camera)	$ 24,450.00											
Quality Level B Locates (without sewer)	$ 8,775.00											
Potholing (assume 12 holes max)	$ 12,000.00											
Potholing and Sewer Camera work												
includes MOT												
	$ 45,225.00											
TOTAL LABOR	$ 45,225.00											
SUBTOTAL	$ 45,225.00											
TOTAL COST	$45,225.00											
USE: SUBSURFACE UTILITY INVESTIGATION (SUI)	**$45,200.00**											

4/14/2020

BFS MAN-HOUR JUSTIFICATION
ROADWAY DESIGN FEES
DES NO 1900482 - S. 9th St, Brick N Wood to VMP, Lafayette

DESCRIPTION	MAN-HOURS BY CLASSIFICATION						LABOR COSTS
	E-IV	E-III	E-II	E-I	EA-III	EA-II	PER TASK
PROJECT MANAGEMENT							
Project Setup	8	8					$2,719.76
Project Supervision / Scheduling	40	80					$19,900.40
Internal kick off meeting	2	4	2			2	$1,479.90
Site Visit	3	3	3				$1,375.77
Kickoff Visit Notes and Photos Summary		2	4				$789.56
Monthly Project Status Reports/ billings - 48 months		48					$7,561.92
Progress Meetings	24	48					$11,940.24
Environmental Services Coordination	1	16					$2,703.07
Utility Coordinator Coordination	1	16					$2,703.07
Geotech Sub Coordination	4	8					$1,990.04
Pavement Designer Coordination	4	8					$1,990.04
Right-of-Way Engineering Coordination	2	16					$2,885.50
Right-of-Way Services Coordination	2	16					$2,885.50
Railroad Coordinator Coordination							
Coord Meetings with Earhart Elementary - assume 3	3	6					$1,492.53
STAGE 1 SUBMISSION							
Collect existing plans, traffic data, mapping, reports, etc.		2	4				$789.56
Perform Traffic Data Collection - Miovision setup/ takedown		1		8			$867.86
Process Traffic Counts		1		4			$512.70
Prepare Topo for Plan and Profile Sheet						8	$990.56
Prepare Original Cross Sections						24	$2,971.68
Prepare conceptual typical sections - 3 each	2	4				6	$1,737.94
Prepare conceptual intesection exhibits - 3 intersect types	2	24	8			40	$10,047.58
Prepare conceptual trail/ sidewalk layout		4	8			24	$4,550.80
Prepare Preliminary Title Sheet and Index Sheet		1	2			8	$1,385.34
Prepare Preliminary Typical Cross Sections		4	2			16	$2,848.52
Prepare Abbreviated Engineer's Assessment		2	4	16		4	$2,705.48
Preliminary Layout for roundabout and approaches	2	16	32			16	$8,662.46
Future crosswalk coordination							
Prepare roundabout checklist		2	8				$1,264.04
Prepare Preliminary Construction Detail Sheets		8	2			24	$4,469.24
Prepare Preliminary Plan and Profile		16	4			40	$7,947.92
Establish vertical alignment		16	4			40	$7,947.92
Establish horizontal alignment		4				8	$1,620.72
Preliminary drainage design criteria and requirements	2	8	24			8	$5,462.62
Prepare Preliminary Storm Sewer Design		24	80			24	$16,242.24
Calculate detention requirements		16	40			4	$7,760.72
Prepare Preliminary Cross Sections		2	8			40	$6,216.84
Preliminary public road approaches and private drives		2	8			32	$5,226.28
Determine Locations of any Retaining Walls Needed							
Level One Checklist & Design Computations		4	8			32	$5,541.36
Identify any design exceptions		4	4				$1,104.64
Preliminary Guardrail Design & Calculations							
Prepare preliminary cost estimate w/ major pay items		4	8	24		16	$5,691.20
QC/QA Plans and Submittal Docs	2	8	8			8	$3,564.70
Submit STAGE 1 in ERMS		1	4				$632.02
PRELIMINARY FIELD CHECK MEETING							
Revise plans per STAGE 1 comments		2	8			8	$2,254.60
Develop roadside ditch grades and elevations							
Establish preliminary construction limits		4				16	$2,611.28
Identify proposed R/W		8	4			4	$2,230.08
Establish roadside barrier and guardrail locations							
Preliminary Curb Ramp Design (35 ea)		8	16	140		16	$17,569.96
Prepare details for roadway and shoulder layout at guardrail							
Prepare preliminary pavement marking and signage plans	2	2	8			32	$5,591.14
Prepare preliminary traffic signal pedestrian plans		4	8			16	$3,560.24
Lighting selection coordination w/ City & suppliers	1	8	2				$1,679.99
Prepare preliminary lighting design and plans		16	50			24	$11,423.32
Electrical Service Coordination		1	4				$632.02
Prepare public and private approach details			2			16	$2,218.36
Analyze queue lengths for turn lanes							
Intersection layout details with turn lanes and turning moveme	2	8		16		16	$5,026.94
Develop preliminary MOT scheme and phasing	8	4	2			32	$6,289.08
Initiate unique special provisions		4	16				$2,528.08
Preliminary pavement design request		4					$630.16
Update construction estimate with added quantities		2	8	16		2	$2,932.32
Coordinate Field Check and distribute plans		3	2				$709.86
Attend Field Check	3	3	3				$1,375.77
Prepare & distribute meeting minutes		2	1				$433.70
STAGE 2 SUBMISSION							
Revise plans per PFC comments		2	4			4	$1,284.84
Finalize drainage design		8	24			16	$6,088.32
Finalize detention design		8	32			8	$6,046.72
Develop permanent erosion protection features							

BFS MAN-HOUR JUSTIFICATION
ROADWAY DESIGN FEES
DES NO 1900482 - S. 9th St, Brick N Wood to VMP, Lafayette

Prepare hydraulics report and computations		8	32				$5,056.16
Submit hydraulics report and documents for approval		4	2				$867.40
Finalize Curb Ramps and Sidewalks		8	16	24		8	$6,279.76
Finalize title sheet and index sheet			1			2	$366.26
Finalize plat sheets		1				8	$1,148.10
Update Plan and Profile sheets		4	8			16	$3,560.24
Prepare approach table		1	4			24	$3,603.70
Prepare structure data table			4			32	$4,436.72
Check plans for Design Criteria conformance		4	2				$867.40
Prepare documentation for Design Exceptions							
Refine preliminary cost estimate	1	2	4	16		2	$2,640.27
Level One checklists and design computations		2	1			4	$928.98
QC/QA Plans and Submittal Docs	2	4	8				$1,943.98
Submit STAGE 2 in ERMS		1	4				$632.02
PUBLIC MEETING PLANS PREPARATION							
Revise plans per STAGE 2 comments		4				4	$1,125.44
Prepare Plans for Public Viewing	1	4				16	$2,793.71
Upload Public Meeting Plans to ERMS		1	4				$632.02
Prepare Traffic Maintenance Plan Displays for Public	2	8				24	$4,596.86
Prepare TMP							
Analyze Queues and Capacity Constraints for Closures		16	4	8			$3,705.44
Attend Public Information Meeting & Public Hearing	4	4					$1,359.88
FINAL FIELD CHECK MEETING							
Incorporate R/W Plan Comments		2				8	$1,305.64
Prepare Final Field Check Plans		4	2			8	$1,857.96
Finalize Permanent Erosion Control Details		2	4			8	$1,780.12
Finalize Traffic Signal Plans		2	8			8	$2,254.60
Finalize Lighting Plans		8	16			24	$6,129.92
Finalize Traffic Maintenance and Phasing Plans	8	4	2			24	$5,298.52
Develop Temporary Erosion and Sediment Control Plans							
Complete All Tables		2	4	8		8	$2,490.44
Complete Earthwork Summary		2				16	$2,296.20
Computations for Erosion and Sediment Control Features							
Coordinate Field Check and distribute plans		2	2				$552.32
Attend Field Check	3	3	3				$1,375.77
Prepare & distribute meeting minutes		2	1				$433.70
STAGE 3 SUBMISSION							
Finalize Details and Tables		1	2			8	$1,385.34
Finalize Cross section details			2			24	$3,208.92
Calc final earthwork quantities		1	2			8	$1,385.34
Finalize all quantities		4	8	24		16	$5,691.20
Update construction estimate with added quantities	1	2	4	8			$1,682.31
Ensure Geotech recommendations are incorporated		2					$315.08
Complete Special Provisions and Pay Items		2	4	16			$2,210.20
Coordinate with Area Engineer for CPD and Plan Review		4					$630.16
Prepare and Submit Rule 5 Submission							
Finalize Project Commitments Report		4	2				$867.40
Finalize Traffic Control Plan Checklist			1	4			$473.78
QC/QA Plans and Submittal Docs	4	4	4			4	$2,329.64
Submit STAGE 3 in ERMS		1	4				$632.02
FINAL TRACINGS SUBMISSION							
Revise plans per STAGE 3 comments		2	4			8	$1,780.12
Prepare Final Tracings Documents		8	12				$2,683.76
CIB review		4					$630.16
	146	706	658	332	0	946	
2020 Rates	$62.29	$53.28	$40.02	$28.51	$55.43	$43.41	
	$9,094.34	$37,615.68	$26,333.16	$9,465.32	$0.00	$41,065.86	
Total Direct Labor	$123,574.36						
Overhead at 1.5936	$196,928.10						
Total Direct Labor and Overhead	$320,502.46						
Fixed Fee 15.00%	$48,075.37						
Cost of Capitol 0.47%	$580.80						
TOTAL LABOR COSTS	$369,158.63						
DIRECT EXPENSE ITEMS							
Mileage $0.38 per mile	$273.60		60	Miles	12	Trips	
Mileage On-Site Travel $0.38 per mile	$0.00			Miles		Trips	
Lodging	$0.00			Nights			
Per Diem	$0.00			Nights			
TOTAL DIRECT EXPENSES	$273.60						
TOTAL PROJECT COST	$369,432.23						
USE	$369,400.00						

MAN-HOUR JUSTIFICATION
ROADWAY PROJECT: 9th Street Road Widening, Trail Sidewalk
LAFAYETTE, IN

MAN-HOURS BY CLASSIFICATION - RW Engineering Docs										LABOR COSTS
DESCRIPTION	FP-IV	FP-IV Hrs Total	FP-III	FP-III Hrs Total	FP-II	FP-II Hrs Total	FP-I	FP-I Hrs Total	PER TASK	TASK TOTALS
Land Plat & Descriptions w/transfer docs		0.0	14.0	266.0		0.0	4.0	76.0	$ 2,350.00	$ 44,650.00
Land Plat & Descriptions, no calcs		0.0		0.0		0.0			$ -	$ -
Temp Parcel (Descriptions, calcs, transfer docs)		0.0	12.0	228.0		0.0	2.0	20.0	$ 1,890.00	$ 18,900.00
Exhibit & Description - NOT Land Plats		0.0		0.0		0.0			$ -	$ -
Description ONLY - No other work		0.0		0.0		0.0			$ -	$ -
Description ONLY - in conjunction w/Boundary, etc		0.0		0.0		0.0			$ -	$ -
ROE's (fee each)		0.0		0.0		0.0			$ -	$ -
RW Plans		NA	6.0	NA	80.0	NA		NA	NA	$ 9,818.00
LCRSP		NA	8.0	NA		NA	60.0	NA	NA	$ 6,364.00
L-10's		-		-		-		-		
R/W Staking					1.0	29.0	1.0	29.0	$ 199.00	$ 3,610.00
TOTAL HOURS		0.0		494.0		29.0		125.0		
Rate	See Above									
Direct Labor Rate	$41.12	$39.33		$29.32		$23.60				
Direct Labor	$0.00	$0.00		$0.00		$0.00				
Total Direct Labor	$0.00									
Overhead at 1.4316 Old = 1.5978	$0.00									
Total Direct Labor and Overhead	$0.00									
Fixed Fee	$0.00									
TOTAL LABOR COSTS	$0.00									$ 83,342.00

PROJECT INFORMATION		DIRECT EXPENSE				
Project:	9th St., Lafayette	ITEM	Number	DISTANCE	RATE	AMOUNT
County:	Tippecanoe	APA's	29.0		$ 250.00	$ 7,250.00
Des. No.:		T&E Reports	19.0		$ 400.00	$ 7,600.00
Fee Parcels:	19	T&E Updates	19		$ 100.00	$ 1,900.00
Temporary Parcels:	10					
	0					$ -
	0					$ -
	0					
	0	TOTAL DIRECT EXPENSE				$ 16,750.00
Parcel Staking - Small	29	TOTAL LABOR COST				$ 83,460.00
Parcel Staking - Large	0	TOTAL FEE				$ 100,210.00
		USE				$ 100,210.00

NS Services
Environmental & Infrastructure
www.nsenvservices.com

4974 S Cobblestone Drive
Zionsville, Indiana 46077
Ph: (317) 753-4758
Fax: (317) 769-4718

April 13, 2020

Ryan Scott
Butler, Fairman & Seufert, Inc.
8450 Westfield Blvd., Suite 300
Indianapolis, Indiana 46240-8302

Re: Improvements to 9th Street from Veterans Memorial Parkway to Brick N Wood Lane in Lafayette, Tippecanoe County, Indiana.

Dear Mr. Scott;

Thank you for the opportunity to submit a scope and fee for the archaeological work on the above referenced project. According to the information provided to me, this project calls for the construction of a two-way, left turn lane for the entire stretch of the road, a new roundabout at Ortman Lane (CR 300 South), sidewalks, and drainage upgrades via curb and gutter. A 70' wide corridor, centered on the current roadway centerline, will be examined for a total study area of approximately 8 acres.

For the purpose of this cost proposal it was assumed that about half of this area is located on relatively undisturbed, level ground with poor surface visibility (i.e. less than 30%), which will require us to excavate shovel probes to complete our survey of this portion of the project. Per state guidelines, these shovel probes will be placed in a grid pattern at 15 m (49.2 ft.) intervals and will be excavated to a diameter of 30 cm (11.8 in.) and a maximum depth of 50 cm (11.8 in.) below the ground surface. All soil removed from these probes will be examined for cultural material by screening it through ¼"-mesh hardware cloth. The remainder of the project area was assumed to be previously disturbed, which can be confirmed with a cursory visual inspection of the project area. In addition, based on the location and environmental setting of the project, it was also assumed that no archaeological sites would be found during these investigations which will allow us to utilize the Indiana Archaeology Short Report form to complete this project.

If the above information is accurate, we could complete an archaeological records check and Phase Ia field reconnaissance of the project area for $3,650.00. This cost proposal is inclusive of all work and expense normally associated with a project of this nature and is valid for 30 days from the date of this letter, unless an agreement is signed. Please be aware, however, that if any of the information is not accurate or if the Indiana Department of Natural Resources, Division of Historic Preservation and Archaeology (IDNR, DHPA), the Indiana Department of Transportation (INDOT), or any other regulatory agency increases either the amount or scope of work required to complete this project, a supplemental cost agreement may be required.

All work conducted for this project will be completed in accordance to and compliance with the Secretary of the Interior's *Standards and Guidelines for Archaeology and Historic Preservation*

(48 FR 44716), the current *Guidebook for Indiana Historic Sites and Structures Inventory - Archaeological Sites* issued by the IDNR, DHPA, the INDOT *Cultural Resources Manual*, and any recent amendments to the Indiana Historic Preservation Act (IC 14-21-1). All field work, laboratory analysis, and preparation of the final report and recommendations will be accomplished or directly supervised by a Principal Investigator meeting the standards set forth in 36 CFR 61 of the National Historic Preservation Act and 312-IAC-21 of the Indiana Administrative Code.

Upon receipt of a signed agreement, we will work with you to develop a timeline for completion of the fieldwork and submission of the report. We will initiate the mapping and archaeological records check portion of this proposal immediately upon the Notice to Proceed (signed agreement). We know that time is of the essence in this project and will strive to have a completed report to you as soon as possible to allow for the maximum amount of time for agency review.

Once again, thank you for the opportunity to provide you with this proposal. We look forward to working with you on this project. If you have any questions or need any additional information, please feel free to contact me at j.plunkett@nsenvservices.com.

Sincerely,

Jeffrey A. Plunkett
Principal Investigator

RESOURCE INTERNATIONAL, INC.
450 East 96th Street, Suite 500
Indianapolis, Indiana 46240
T: 317.536.5768

Planning

Engineering

Construction Management

Technology

April 14, 2020

Mr. Chris Wheatley, P.E.
Lafayette Road Department Manager
Butler, Fairman & Seufert, Inc.
11 South Third Street, Suite 200
Lafayette, Indiana 47901

Re: Fee Proposal - Pavement Analysis and Design
S. 9th Street Reconstruction and Widening
Brick N Wood Drive to Veterans Memorial Parkway
Des. No. 1900482
City of Lafayette, Indiana
Rii Proposal No. 20-I024

Mr. Wheatley,

Resource International, Inc. (Rii) is pleased to submit, for your review and consideration, this cost proposal to perform pavement analysis and design for the proposed reconstruction and widening along S. 9th Street from Brick N Wood Drive to Veterans Memorial Parkway (Des. No. 1900482), in the City of Lafayette, Indiana.

As described in our attached proposal Rii will provide a complete pavement analysis and design in accordance with Part 6 (Pavement Design) of the INDOT Design Manual (IDM). Rii offers these services for $15,845.96 based on the established contract rates. Upon receipt of notice to proceed (NTP), Rii will commence with work as soon as practical and will meet the established schedule for completion provided in the contract documents.

We sincerely appreciate the opportunity to submit this proposal, and look forward to working with you on this project. If you have any questions regarding this proposal, please contact us.

Sincerely,

Brian Trenner

Brian R. Trenner, P.E.
Project Manager

Cc: S. Johnson

Resource International - Pavement Analysis and Design – Fee Proposal S. 9th Street Reconstruction and Widening – Brick N Wood Drive to Veterans Memorial Parkway – Des. No. 1900482 – City of Lafayette, Indiana

Introduction

Resource International, Inc. (Rii) is providing the following fee proposal in response to the request for pavement analysis and design for the proposed reconstruction and widening along S. 9th Street from Brick N Wood Drive to Veterans Memorial Parkway (Des. No. 1900482), in the City of Lafayette, Indiana. The existing roadway consists of two (2) travel lanes, one (1) in each direction, with a southbound right turn lane at Amelia Earhart Elementary School. No shoulders are not present along the project alignment. Based on the information provided, it is understood that the existing pavement is to be reconstructed and widened to provide two travel lanes, one in each direction, and a two way center turn lane with curb and gutter. In addition, a new roundabout will be constructed at the intersection of S. 9th Street and Ortman Lane, and it is understood that the existing southbound right turn lane at Amelia Earhart Elementary School will be maintained. Additionally, it is proposed to construct a new multi-use trail and sidewalk between Veteran's Memorial Parkway and Twyckenham Boulevard.

Rii will provide a full pavement design report for this project in accordance with Part 6 (Pavement Design) of the IDM, including recommendations for the proposed pavement section along the reconstructed and widened S. 9th Street roadway and new multi-use trail.

Pavement Design and Recommendations

At the time of this proposal, it is unknown whether the existing pavement section will be reused as part of the proposed pavement section or completely replaced. Therefore, Rii has provided hours to perform a site visit to conduct a patching survey and assess the current pavement condition. The patching survey will determine where partial depth and full depth patching will be needed for structural purposes. Distresses will be logged and recommendations provided for patching based on the observed distress types and severities in accordance with Chapter 603 of the IDM.

Rii will review all available information provided for the subject project, which is anticipated to include design plans, traffic data, geotechnical report and pavement core reports. Following review of the project plans, pavement and geotechnical data, Rii will perform iterative MEPDG design analyses to determine the proposed pavement section for the roadway reconstruction and widening, which will include evaluating up to four (4) alternate pavement sections for the project in accordance with Chapters 601, 602, 604 and 605 of the IDM. In addition, Rii will provide a proposed pavement section for the new multi-use trail.

Analysis of cost per lane per mile for the overlay will be performed for each alternative analyzed in accordance with Chapter 606 of the IDM.

Rii will provide a methodology for selection of the preferred pavement treatment along with a recommendation.

As part of the pavement selection, Rii will review possible construction and maintenance issues.

Final Pavement Design Report

Based on the pavement designs evaluated Rii will provide a complete and comprehensive pavement design report that will include project intent and pavement history from initial construction through the last pavement treatment. The report will include an updated conditions assessment and a patching summary table. The recommended design will be presented with a table of design data.

A pavement design report will be prepared in accordance with the requirements outlined in Part 6 of the IDM. Rii will provide a memorandum report that incorporates the following elements per the Design Manual:

- Executive summary
- Project description
- Pavement history (if available)
- Current pavement condition assessment and patching details (if required)
- Pavement design and recommendations
- Cost Analysis on a per lane per mile basis
- Selection methodology
- Construction and maintenance issues
- Appendices with:
    - Patching summary (if required)
    - Typical section details
    - HMA binder selection
    - AASHTOWare Pavement ME Design trials
    - Cost analyses

Cost

Rii offers this fee proposal for the above tasks for pavement assessment, analysis, and design services for $15,845.96 based on the established contract rates.

Schedule

Upon receipt of notice to proceed (NTP), Rii will commence with work as soon as practical and will meet the established schedule for completion provided in the contract documents.

Erosion Control Design/Rule 5 Permit

PROJECT NO.: *S 9th Street from Brick N Wood Drive to Veterans Memorial Parkway (Des # 1900482)*

CLIENT: City of Lafayette, Indiana

DESCRIPTION	STAFF HOURS BY CLASSIFICATION									TOTAL HOURS / TASK	TOTAL DOLLARS / TASK
	Plan Sheets	Professional Engineer	Sr. Env. Sci/ Engineer	Sr. Cadd Designer	Cadd Designer	Environmental Scientist	Project Admin				
Task 1 - Management											
Project Management/Coordination		4					4			8	$950.45
Task 2 - Erosion Control Design/Rule 5 Permit											
Review Design Plans		2	2							4	$534.78
Agency Coordination/Meetings		2	2							4	$534.78
Erosion Control Design Calculations	8	4	16							20	$2,315.64
Plan Development/Details	8		4		60					64	$5,044.18
Rule 5 Permit			2			24	4			30	$2,577.64
Quantities			4							4	$415.36
QA/QC		4								4	$654.21
SUBTOTAL:										8	$13,027.04
TOTAL - HOURS:		16	30	0	60	24	8	0	0	138	
Loaded Hourly Rate		$163.55	$103.84	$92.58	$77.15	$86.40	$74.06				
COSTS PER CLASSIFICATION		$2,616.83	$3,115.20	$0.00	$4,628.82	$2,073.71	$592.49	$0.00	$0.00		$13,027.04
TOTAL HOURLY COSTS:											$13,027.04

DIRECT EXPENSES											
Mileage	2	Trips x					130	Mi./Trip x	$0.53		$137.80
Meals	0	Persons x					0	Days x	$26.00		$0.00
Lodging	0	Nights x					$85.00	/ Night			$0.00
Miscellaneous cost (permit fee, printing, etc)											$300.00
DIRECT EXPENSE SUBTOTAL:											$437.80

TOTAL COSTS:	$13,500.00

INDIANA DEPARTMENT OF TRANSPORTATION

100 North Senate Avenue
Room N725
Indianapolis, Indiana 46204

PHONE: (317) 232-5095
FAX: (317) 233-8862

Eric Holcomb, Governor
Joe McGuinness, Commissioner

September 04, 2019

Prequalification Section
(317) 232-5095

John Brand
Butler, Fairman and Seufert, Inc.
8450 Westfield Blvd., Suite 300
Indianapolis, IN 46240

Re: Consultant Prequalification

Dear John Brand:

The Consultant Prequalification General/Technical Renewal Application submitted on 8/16/2019 has been reviewed by this office. Your firm has been prequalified to provide consulting services to the Indiana Department of Transportation (INDOT) in the work groups listed on the attached Work Type Certification, effective 09/04/2019. This approval supersedes any previous approval for prequalification, but is subject to revision or modification in accordance with the most current edition of the INDOT Consultant Prequalification Manual. Your Financial approval will expire on 03/30/2020. Your General/Technical approval will expire on 09/30/2021.

Your Firm's annual contracting capacity for the CPA Audit Level is $28,665,408.00 for the fiscal period that ended on 9/30/2018. Your firm was approved for this financial level as notified separately by the External Audit Section. The requested and approved financial level determines the firm's service limitations as stated in the INDOT Consultant Prequalification Manual. Consultant firms must submit their annual financial application within 180 calendar days of the end of each fiscal year.

You are required to submit a modification application in the event of any changes in firm ownership, firm address, form of business entity under which the firm operates, manpower significant enough to affect the firm's qualifications or capacity (or operations of laboratories, facilities, etc.), financial status (such as filing for bankruptcy), or any other change which affects an element INDOT considers when prequalifying a consultant. The Consultant must notify INDOT within 15 days of any change in the information provided in its Prequalification Application and to submit a modification application in a timely manner. Failure to submit a modification application within 15 days after the initial notification will result in the loss of the Consultants Prequalification Status.

Please contact Mr. John Leming, Consultant Prequalification Research Analyst at 317-234-4917 if you have any questions on this matter.

Respectfully,

Jose M. Murillo, P.E.
Prequalification Engineer

cc: Prequalification File
External Audit

Prequalified Work Type Certification

Issued By

Indiana Department of Transportation

Date Printed: 09/04/2019

Butler, Fairman and Seufert, Inc.

Valid Work Groups

Effective: 09/04/2019 **Expires on:** 09/30/2021

Work Type Code	Work Type Description	Qualifying Person(s)
2.2	Traffic Forecasting	Wisecaver, Greg
3.1	Non-Complex Traffic Capacity and Operations Analysis	Sheets, Joanna Carly
3.2	Complex Traffic Capacity and Operations Analysis	Williard, Troy D
4.1	Traffic Safety Analysis	Sheets, Joanna Carly
5.1	Environmental Document Preparation - EA/EIS	Scott, Ryan L
5.2	Environmental Document Preparation - CE	Scott, Ryan L
5.3	Environmental Document Preparation - Section 4(f)	Scott, Ryan L
5.4	Ecological Surveys	Bennett, Neal E
5.5	Wetland Mitigation	Bennett, Neal E
5.6	Waterway Permits	Bennett, Neal E
5.8	Noise Analysis and Abatement Design	Scott, Ryan L
5.10	Historical/Architectural Investigations	Biggio, Elizabet
5.13	ESA Screening and Phase I ESA	Scott, Ryan L
6.1	Topographic Survey Data Collection	Gosewehr, Eugene K Neal, Mark W
8.1	Non-Complex Roadway Design	Wheatley, Christopher W

Work Type Code	Work Type Description	Qualifying Person(s)
8.2	Complex Roadway Design	Isaacs, Daniel J Wheatley, Christopher W
8.3	Roundabout Design	Sheets, Joanna Carly
9.1	Level 1 Bridge Design	Matel, Michael Wright, Bryan W
9.2	Level 2 Bridge Design	Matel, Michael Wright, Bryan W
10.1	Traffic Signal Design	Williard, Troy D
10.3	Complex Roadway Sign Design	Isaacs, Daniel J
10.4	Lighting Design	Isaacs, Daniel J
11.1	Right of Way Plan Development	Friend, Brent A Nick, Randall A
12.1	Project Management for Acquisition Services	Deahl, James A
12.2	Title Research	Friend, Brent A
12.3	Value Analysis	Alexander, Craig E
12.4	Appraisal	Alexander, Craig E
12.5	Appraisal Review	Alexander, Craig E
12.6	Negotiation	Francis, Ronald L
12.7	Closing	Francis, Ronald L

Work Type Code	Work Type Description	Qualifying Person(s)
13.1	Construction Inspection	Biesecker, Michael W Books, Jeremy L
14.1	Regular Bridge Inspection	Olson, Jonathan D
14.2	Complex Bridge Inspection	Olson, Jonathan D
14.4	Small Structure and Miscellaneous Structure Inspections	Olson, Jonathan D Scott, Michael D
14.5	Bridge Load Capacity Rating & Other Bridge Analysis/Testing	Olson, Jonathan D
16.1	Utility Coordination	Hintz, Kevin A
17.1	Drainage Design for Driveway Permits	Sheets, Joanna Carly
17.2	Small Structure and Pipe Design	Langille, Andrea M
17.3	Storm Sewer and Detention Design	Sheets, Joanna Carly
17.4	Bridge Hydraulic Design	Shergalis, Katlyn Wright, Bryan W

cc: Prequalification File

Jose M. Murillo, P.E.
Prequalification Engineer

INDIANA DEPARTMENT OF TRANSPORTATION

100 North Senate Avenue
Room N749
Indianapolis, Indiana 46204

Eric Holcomb, Governor
Joe McGuinness, Commissioner

March 27, 2020

Mr. Bradley Watson, Executive Vice President
Butler, Fairman & Seufert, Inc.
8450 Westfield Blvd
Suite 300
Indianapolis, IN 46240

Dear Mr. Watson:

We have performed a cognizant review of the audit and supporting workpapers of the Indirect Cost Rate of Butler, Fairman & Seufert, Inc. as presented in the Statement of Direct Labor, Fringe Benefits, and General Overhead for the year ended September 30, 2019 in accordance with our role as Cognizant Agency as defined in 23 U.S.C. 112(b)(2)(c) and 23 CFR 172.3 and 172.7. The audit was performed by the independent CPA firm Somerset CPAs. The CPA represented that the audit was conducted in accordance with the *Government Auditing Standards*, as promulgated by the Comptroller General of the United States of America, and the audit was designed to determine that the indirect cost rate was established in accordance with Cost Principles contained in the Federal Acquisition Regulation, 48 CFR Part 31. Our cognizant review was performed in accordance with the AASHTO *Review Program for CPA Audits of Consulting Engineers' Indirect Cost Ra*tes.

In connection with our cognizant review, nothing came to our attention that caused us to believe that the audit and supporting workpapers for the Indirect Cost Rate and the related Audit Report we reviewed did not conform in all material respects to the aforementioned regulations and auditing standards.

Corporate: 159.36%
Facilities Capital Cost of Money (FCCM): 0.47%

Yours truly,

Natalya Clark

Natalya Clark,
Manager of External Audit

Indiana DBE Certification Program

In accordance with 49 CFR Part 26 as published in the code of federal regulations, the Indiana Department of Transportation acknowledges

GeoSolutions, Inc.

as a certfied DBE in the State of Indiana.

Date Issued:07/07/2017

No Change Affidavit Due:07/31/2020

ECrawford

Elizabeth Kiefner Crawford, Director
Economic Opportunity Division

Derrick Casson

Derrick Casson, Certification Manager
Economic Opportunity Division

(Reference the Indiana Department of Transportation's DBE Public Search at http://www.in.gov/2674.htm for the most current information regarding this certification)

Indiana DBE Certification Program

In accordance with 49 CFR Part 26 as published in the code of federal regulations, the Indiana Department of Transportation acknowledges

Resolution Group, Inc.

as a certfied DBE in the State of Indiana.

Date Issued:10/29/2012

No Change Affidavit Due:10/31/2020

ECrawford

Elizabeth Kiefner Crawford, Director
Economic Opportunity Division

Derrick Casson

Derrick Casson, Certification Manager
Economic Opportunity Division

(Reference the Indiana Department of Transportation's DBE Public Search at http://www.in.gov/2674.htm for the most current information regarding this certification)

Indiana DBE Certification Program

In accordance with 49 CFR Part 26 as published in the code of federal regulations, the Indiana Department of Transportation acknowledges

Rita Ann Gabriel & Associates, Inc.

as a certfied DBE in the State of Indiana.

Date Issued:10/20/2015

No Change Affidavit Due:10/31/2020

ECrawford

Elizabeth Kiefner Crawford, Director
Economic Opportunity Division

Derrick Casson

Derrick Casson, Certification Manager
Economic Opportunity Division

(Reference the Indiana Department of Transportation's DBE Public Search at http://www.in.gov/2674.htm for the most current information regarding this certification)

Indiana DBE Certification Program

In accordance with 49 CFR Part 26 as published in the code of federal regulations, the Indiana Department of Transportation acknowledges

NS Services LLC

as a certfied DBE in the State of Indiana.

Date Issued:04/17/2017

No Change Affidavit Due:04/30/2020

E Crawford

Elizabeth Kiefner Crawford, Director
Economic Opportunity Division

Derrick Casson

Derrick Casson, Certification Manager
Economic Opportunity Division

(Reference the Indiana Department of Transportation's DBE Public Search at http://www.in.gov/2674.htm for the most current information regarding this certification)

Indiana DBE Certification Program

In accordance with 49 CFR Part 26 as published in the code of federal regulations, the Indiana Department of Transportation acknowledges

Resource International, Inc.

as a certfied DBE in the State of Indiana.

Date Issued:02/13/2017

No Change Affidavit Due:01/31/2021

E Crawford

Elizabeth Kiefner Crawford, Director
Economic Opportunity Division

Derrick Casson

Derrick Casson, Certification Manager
Economic Opportunity Division

(Reference the Indiana Department of Transportation's DBE Public Search at http://www.in.gov/2674.htm for the most current information regarding this certification)

Posting Date: February 24, 2020

Request for Proposals Notification

Title: City of Lafayette, Indiana Widening of S 9th Street from Brick N Wood Drive to Veterans Memorial Parkway (Des # 1900482) in Crawfordsville District

Response Due Date & Time: March 23, 2020 at 3:30 PM

This Request for Proposals (RFP) is official notification of needed professional services. This RFP is being issued to solicit a letter of Interest (LOI) and other documents from firms qualified to perform engineering work on federal aid projects. A submittal does not guarantee the firm will be contracted to perform any services but only serves notice the firm desires to be considered.

Contact for Questions:

Jeromy Grenard, PE – City Engineer
20 N. 6th Street
Lafayette, IN 47901
765-807-1050
jgrenard@lafayette.in.gov

Submittal Requirements:

1. Letter of Interest – 6 Copies (required content and instructions follow)
2. One (1) signed Affirmative Action Certification and associated required documents for all items if the DBE goal is greater than 0%.

Submit To:

Jeromy Grenard, PE – City Engineer
20 N. 6th Street
Lafayette, IN 47901
765-807-1050
jgrenard@lafayette.in.gov

Selection Procedures:

Consultants will be selected for work further described herein, based on the evaluation of the Letter of Interest (LOI) and other required documents. The Consultant Selection Rating Form used to evaluate and score the submittals is included for your reference. Final selection ranking will be determined by:

- (•) The weighted score totals with the highest score being the top ranked firm
- ( ) Rank totals with the lowest rank total being the top ranked firm

Requirements for Letters of Interest (LOI)

A. General instructions for preparing and submitting a Letter of Interest (LOI).

1. Provide the information, as stated in Item B below, in the same order listed and signed by an officer of the firm. Signed and scanned documents, or electronically applied signatures are acceptable. Do not send additional forms, resumes, brochures, or other material unless otherwise noted in the item description.

2. LOI's shall be limited to twelve (12) 8 ½" x 11" pages that include Identification, Qualifications, Key Staff, and Project Approach.

3. LOI's must be received no later than the "Response Due Date and Time"; as shown in the RFP header above. Responses received after this deadline will not be considered. Submittals must include all required attachments to be considered for selection.

B. Letter of Interest Content

1. Identification, Qualifications and Key Staff

   a. Provide the firm name, address of the responsible office from which the work will be performed and the name and email address of the contact person authorized to negotiate for the associated work.

   b. List all proposed sub consultants, their DBE status, and the percentage of work to be performed by the prime consultant and each sub consultant. (See Affirmative Action Certification requirements below.) A listing of certified DBE's eligible to be considered for selection as prime consultants or sub-consultants for this RFP can be found at the "Prequalified Consultants" link on the Indiana Department of Transportation (INDOT) Consultants Webpage. (http://www.in.gov/indot/2732.htm).

   c. List the Project Manager and other key staff members, including key sub consultant staff, and the percent of time the project manager will be committed for the contract, if selected. Include project engineers for important disciplines and staff members responsible for the work. Address the experience of the key staff members on similar projects and the staff qualifications relative to the required item qualifications.

   d. Describe the capacity of consultant staff and their ability to perform the work in a timely manner relative to present workload.

2. Project Approach

   a. Provide a description of your project approach relative to the advertised services. For project specific items confirm the firm has visited the project site. For all items address your firm's technical understanding of the project or services, cost containment practices, innovative ideas and any other relevant information concerning your firm's qualifications for the project.

Requirements for Affirmative Action Certification

A completed Affirmative Action Certification form is required for all items that identify a DBE goal greater than "0", in order to be considered for selection. The consultant must identify the DBE firms with which it intends to subcontract.

On the Affirmative Action Certification, include the contract participation percentage of each DBE and list what the DBE will be subcontracted to perform.

If the consultant does not meet the DBE goal, the consultant must provide documentation in additional pages after the form that evidences that it made good faith efforts to achieve the DBE goal.

All DBE subcontracting goals apply to all prime submitting consultants regardless of the prime's status of DBE.

INDOT DBE Reciprocity Agreement with KYTC

An Agreement between INDOT and the Kentucky Transportation Cabinet (KYTC) established reciprocal acceptance of certification of DBE firms in their respective states under the Unified Certification Program (UCP) pursuant to 49 CFR ?26.81(e) and (f).

Copies of the DBE certifications, as issued by INDOT or the Kentucky Transportation Cabinet (KYTC), are to be included as additional pages after the AAC form for each firm listed on the AAC form. The following are DBE Locator Directories for each State Transportation Agency:

INDOT: **https://entapps.indot.in.gov/DBELocator/**

KYTC: **https://transportation.ky.gov/Civil-Rights-and-Small-Business-Development/Pages/Certified-DBE-Directory.aspx**

Information about the Indiana DBE Program is available at: **https://www.in.gov/indot/2674.htm.**

Information about the KYTC DBE Program is available at: **https://transportation.ky.gov/Civil-Rights-and-Small-Business-Development/Pages/default.aspx.**

Work item details:

Local Public Agency: City of Lafayette

Project Location: S 9th Street from Brick N Wood Drive to Veterans Memorial Parkway

Project Description: Engineering design and construction inspection for the widening and urbanization of S 9th Street. Cross section to include two travel lanes, a two-way left turn lane, curb and gutter and storm sewer. Addition of a 10-ft multi-use path on the west side of the road and a 5-ft sidewalk on the east. New pedestrian-scale lighting, an intersection improvement at the intersection of S 9th Street and Ortman Lane, and street trees.

INDOT Des #: 1900482

Phases Included: PE, RW, CE

Estimated Construction Amount: $5,300,000

Funding: 80% Federal / 20% Local Match

Term of Contract: Until Project Completion

DBE goal: 7%

Required Prequalification Categories:

- ☑ 5.2 Environmental Document Preparation - CE
- ☑ 6.1 Topographical Survey Data Collection
- ☑ 8.1 Non-Complex Roadway Design
- ☐ 9.1 Level 1 Bridge Design
- ☑ 11.1 Right of Way Plan Development
- ☐ Additional Categories Listed Below:

5.6, 5.9, 5.10, 7.1, 8.3, 10.1, 10.4, 18.1

- ☑ 12.1 Project Management for Aquisition Services
- ☑ 12.2 Title Search
- ☑ 12.4 Appraisal
- ☑ 12.5 Appraisal Review
- ☑ 13.1 Construction Inspection

LPA Consultant Selection Rating Sheet

Sample:

RFP Selection Rating for _____ **Des. No.** _____

(City, County, Town) or (Local Public Agency)

Services Description: _____

Consultant Name: _____

Evaluation Criteria to be Rated by Scorers					
Category	**Scoring Criteria**	**Scale**	**Score**	**Weight**	**Weighted Score**
Past Performance	**Performance evaluation score averages from historical performance data.**				
	Quality score for similar work from performance database.			6	
	Schedule score from performance database.			3	
	Responsiveness score from performance database.			1	
Capacity of Team to do Work	**Evaluation of the team's personnel and equipment to perform the project on time.**			20	
	Availability of more than adequate capacity that results in added value.	1			
	Adequate capacity to meet the schedule.	0			
	Insufficient available capacity to meet the schedule.	-1			
Team's Demonstrated Qualifications	**Technical Expertise: Unique Resources that yield a relevant added value or efficiency to the deliverable.**			15	
	Demonstrated outstanding expertise and resources identified for required services for value added benefit.	2			
	Demonstrated high level of expertise and resources identified for required services for value added benefit.	1			
	Expertise and resources at appropriate level.	0			
	Insufficient expertise and/or resources.	-3			
Project Manager	**Predicted ability to manage the project, based on: experience in size, complexity, type, subs, documentation skills.**			20	
	Demonstrated outstanding experience in similar type and complexity.	2			
	Demonstrated high level of experience in similar type and complexity.	1			
	Experience in similar type and complexity shown in resume.	0			
	Experience in different type or lower complexity.	-1			
	Insufficient experience.	-3			
Approach to Project	**Project Understanding and Innovation that provides cost and/or time savings.**			15	
	High level of understanding and viable innovative ideas proposed.	2			
	High level of understanding of the project.	1			
	Basic understanding of the project.	0			
	Lack of project understanding.	-3			
				Weighted Sub-Total:	

It is the responsibility of scorers to make every effort to identify the firm most capable of producing the highest deliverables in a timely and cost effective manner without regard to personal preference.

I certify that I do not have any conflicts of interest associated with this consultant as defined in 49CFR118.36.

I have thoroughly reviewed the letter of interest for this consultant and certify that the above scores represent my best judgment of this firm's abilities.

Signature: _____ Print Name: _____

Title: _____ Date: _____

(Form Rev. 4-7-16)

Des. #: 1900482

Affirmative Action Certification (AAC) for Disadvantaged Business Enterprises (DBE)

I hereby certify that my company intends to affirmatively seek out and consider Disadvantaged Business Enterprises (DBEs) certified by the State of Indiana's DBE Program and the Kentucky Transportation Cabinet (KYTC) DBE Program to participate as part of this proposal. An Agreement between INDOT and KYTC established reciprocal acceptance of certification of DBE firms in their respective states under the Unified Certification Program (UCP) pursuant to 49 CFR §26.81(e) and (f).

I acknowledge that this certification is to be made an integral part of this proposal. I understand and agree that the submission of a blank certification may cause the proposal to be rejected. I certify that I have consulted the following DBE websites to confirm that the firms listed below are currently certified DBEs:

INDOT: https://entapps.indot.in.gov/DBELocator/
KYTC: https://transportation.ky.gov/Civil-Rights-and-Small-Business-Development/Pages/Certified-DBE-Directory.aspx

I certify that I have contacted the certified DBE's listed below, and if my company becomes the CONSULTANT, these DBEs have tentatively agreed to perform the services as indicated. I understand that neither my company nor I will be penalized for DBE utilization that exceeds the goal. After contract award, any change to the firms listed in this Affirmative Action Certification to be applied toward the DBE goal must have prior approval by INDOT's Economic Opportunity Division.

I. DBE Subconsultants to be applied toward DBE goal for the RFP item:

Certified DBE Name	Service Planned	Estimated Percentage to be Paid*
		%
		%
		%
		%

II. DBE Subconsultants to be utilized beyond the advertised DBE goal for the RFP item:

Certified DBE Name	Service Planned	Estimated Percentage to be Paid*
		%
		%
		%
		%

Estimated Total Percentage Credited toward DBE Goal:_____

Estimated Percentage of Voluntary DBE Work Anticipated over DBE Goal:_____

Company Name: _____

Signature: _____ **Date:** _____

* It is understood that these individual firm percentages are estimates only and that percentages paid may be greater or less as a result of negotiation of contract scope of work. My firm will use good faith efforts to meet the overall DBE goal through the use of these or other certified and approved DBE firms.

CITY OF
LAFAYETTE

Office of the City Engineer

April 21, 2020

Board of Public Works and Safety
City of Lafayette
20 N 6th Street
Lafayette, IN 47901

Dear Board Members:

You have before you the Contract with Fisher Engineering for the Main Street & Kossuth Street Intersection Improvement Project. This Project will address pedestrian safety and efficiency between the new Loeb Stadium and the parking lot at the old Osco site at Main Street and Kossuth Street. This will be a two-phase project, and this contract is for Phase 1 services, which include:

- Identify all available parking areas for Columbian Park and prepare exhibits for publication for park patrons
- Evaluate the intersection of Main Street and Kossuth Street and identify alternatives to improve pedestrian connectivity to Columbian Park
- Evaluate the stretch of Main Street between the parking lot and the Park and recommend improvements for pedestrian connectivity
- Survey of Main Street from Wallace Avenue to Kossuth Street
- Prepare a cost estimate of preferred improvements

Design of the improvements will not be a part of Phase 1, but will be a supplement to this contract once the improvements are identified.

The contract amount for this project is $49,585.00.

This contract has been reviewed by the City Attorney and I recommend it for your approval.

Sincerely,

Jeromy L. Grenard

Jeromy L. Grenard, PE, PTOE
City Engineer / Public Works Director

FISHER ENGINEERING
Affiliate of Chastain & Associates LLC

March 25, 2020

Via email

PROPOSAL FOR PROFESSIONAL SERVICES

Jeromy Grenard, City Engineer
ENGINEERING & PUBLIC WORKS
20 N 6th Street
Lafayette, IN 47901

Ref: Main & Kossuth Intersection Improvement
Columbian Park, Lafayette, Indiana

Dear Jeromy:

Fisher Engineering (Fisher) is pleased to have the opportunity to provide land surveying and engineering design services for the Main & Kossuth Intersection Improvements.

Project Definition

The project has two major components, to provide analysis, coordination, and map preparation associated with the public parking needs and availability in the vicinity of Columbian Park, and to provide planning and design for intersection and pedestrian route improvements along Main Street from the new Kossuth St. parking lot to Loeb Stadium. We have outlined the proposed scope into Phase I, being study and recommendations, and Phase II, being design and preparation of Construction Documents, to be followed by bidding and construction; with the specific scope of these services outlined as follows:

Scope of Services

The following Phase I planning services are included:

Phase I – Study and Recommendations

1) **Identify available parking for Columbian Park patrons**
   a) Review available parking in the vicinity of Columbian park and provide an analysis of parking options. This will cover the following areas:
      i) On-street parking (including identifying the needs of residents)
      ii) Public parking lots (city owned parking, with notations of current and future spaces)
      iii) Private shared lots (identify available spaces, ownership, and potential for shared use)
   b) Prepare exhibits for review and discussion with city officials and refine as needed
   c) Prepare maps other deliverables to aid in sharing this parking information with park patrons, these will be published in both a printable and web-based format

d) If requested, we will coordinate public comment, community engagement, and stakeholder input and review. This will include feedback via social media, phone calls, and one meeting. This work is noted as Alternate Add #1 in the following fee schedule.

2) **Evaluate intersection improvements at Main and Kossuth Streets**
   a) Gather needed information, including aerial photos, GIS data, traffic counts, studies, & plans
   b) Identify up to 3 alternatives for proposed improvements for the pedestrian crossings
   c) Model traffic and pedestrian movements for the existing condition using HCS
   d) Model up to 3 identified alternatives (one will be the All-Stop w/ Diagonal Pedestrian Crossing)
   e) Evaluate interconnection with the signal at Wallace Ave. and Main Street
   f) Identify the preferred configuration
   g) Prepare an Intersection Design Study (IDS) for the selected configuration

3) **Evaluate pedestrian routes from the proposed parking lot at Kossuth to Loeb Stadium**
   a) Review relevant construction plans and planning studies, including the 5-Points Master Plan
   b) Consider routes along both sides of Main Street
   c) Evaluate routes for accessibility and conformance with ADA (PROWAG) and bike routes
   d) If requested, we will coordinate public comment, community engagement, and stakeholder input and review. This will include feedback via social media, phone calls, and one meeting. This work is noted as Alternate Add #1 in the following fee schedule.
   e) Identify a preferred route

4) **Topographic / Route Surveys**
   a) Identify areas that have existing surveys for possible exclusion from survey limits
   b) Survey along Main St. from edge of pavement to 10' outside of Right-of-way, on both sides of the street from Wallace to 24th St. and along Kossuth St. from 23rd St. to 24th St.
   c) Use Aerial photos and existing Right-of-Way information where available outside of topo limits

5) **Prepare preliminary cost estimate based on preferred intersection and pedestrian route alternates**

6) **Assume 4 coordination meetings with city staff**

The following services represent the Phase II - Design, Bidding and Construction phase of the project; this scope of services and the associated fee basis will be revisited and determined at the completion of the Phase I work.

Phase II – Design and preparation of Construction Documents

7) **There is no design component for the parking summary scope of work**

8) **Design intersection improvements at Main and Kossuth Streets**
   a) Signal plans will be developed from the IDS as approved with City guidance in Phase I
   b) The Intersection Design and Details will address the following:
      i) Curb Removal and Replacement, including pavement repair
      ii) Sidewalk Removal and Replacement
      iii) Provide ADA (PROWAG) compliant ramp design and details
      iv) Striping, Signage and Signal Modification

v) Wayfinding signage for pedestrian crossing (coordinated w/ existing guidelines and stds.)
vi) Landscaping Plan
vii) Lighting Plan with photometrics

9) Design pedestrian routes from the proposed parking lot at Kossuth to Loeb Stadium

a) Construction Plans will be developed based on the preferred route in Phase I.
b) The Pedestrian Route Design and Construction Plans will address the following:
i) Curb Removal and Replacement, including pavement repair
ii) Sidewalk Removal and Replacement
iii) Provide ADA (PROWAG) compliant walk and ramp design and details
iv) Wayfinding signage for pedestrian route (coordinated w/ existing guidelines and stds.)
v) Grading Plan (addressing drainage design and ADA accessibility)
vi) Erosion Control Plan (addressing site construction erosion control)
vii) Site Layout and Landscaping Plan
viii) Lighting Plan with photometrics
ix) Construction details and site Specifications, as a part of the construction plan set

Bidding

10) Calculate quantities and prepare cost estimate for construction.

11) Prepare bid documents, specifications, and special provisions.

12) Provide bidding assistance

a) Attend pre-bid conferences, if any
b) Manage and distribute plans necessary for public bid
c) Respond to bidder questions and issue addenda withing the bid period
d) Review the bids and provide bidder recommendation

Construction

13) These services are anticipated during the intersection and walk improvement construction

a) Attend pre-construction conference
b) Conduct site inspection visits and prepare inspection reports
c) Provide change order recommendations to the owner, as needed
d) Provide review and response for shop drawings and other project submittals
e) Provide review and response on 'like-kind' types of replacements
f) Provide review and recommendation for pay applications and documentation

Project Schedule

Phase I – April through June 2020

Phase II – July through September 2020

Bidding – October 2020

Construction - November 2020 through April 2021

Fee Compensation

We propose to perform the base Phase I Land Surveying and Engineering Design services itemized as items 1 through 6 for a fee not to exceed $ **47,995.00.**

As noted in the scope, the Phase 1 services to coordinate community engagement are optional and will be completed if so desired during the course of the project
Upon your request, we will complete the services itemized as items 1d for a fee not to exceed $ **1,590.00** and the services itemized as items 3d for a fee not to exceed $ **1,590.00.**

Outside Service Fees: The above fees do not include fees for services from other parties, including but not limited to: filing fees, permit fees, review fees, legal fees, recording fees, and newspaper publication fees, which have been stipulated by the various agencies. Fisher generally prefers that these costs be paid by the client directly to the outside agency; however, in the event that Fisher pays such an agency for these services, such payments will be listed as an additional cost on your invoice.

I. **Assumptions and Conditions**

a. Assume preliminary design submittal prior to quantity calculations and cost estimate within specifications and bid documents and final design submittal with quantity calculations, cost estimate, specifications, and bid documents.

b. All project deliverables will be provided as electronic files in portable document format (.pdf).

c. Project meetings and/or public hearings are assumed to be a maximum of 1.5 hours' duration, and a total of 5 meetings have been allocated for this project.

d. This proposal, including any estimated or not-to-exceed fees and any stated project timeline, is based solely on the Scope of Services outlined herein. Deviation from this Scope of Services may result in additional billable charges. At the request of the owner, an addendum to the Proposal for Professional Services will be provided, and agreed to by both parties, to address such scope changes.

e. Rates are subject to change. Invoices will be issued monthly for work to date. Terms: Net due 30 days from date of invoice. This Proposal is valid for 14 days from date issued.

II. **Summary**

It is my intention to provide you with a comprehensive proposal for the surveying and engineering design for the Main & Kossuth Intersection Improvements project. If you find this proposal acceptable, please notify me and I will forward our "Agreement for Professional Services" for you to execute and formalize our contract. We look forward to working with you on this exciting project. Please call if you have any questions.

Sincerely,

FISHER ENGINEERING

Kyle K. Betz, PE, PLS
Project Manager

FISHER ENGINEERING
Affiliate of Chastain & Associates LLC

Schedule of Rates

Classification	Rate	
Registered Land Surveyor	$140.00	/ hour
Professional Engineer	$145.00	/ hour
Project Surveyor	$100.00	/ hour
Project Engineer	$100.00	/ hour
Engineering Technician	$85.00	/ hour
Field Crew Chief	$100.00	/ hour
1-Man Crew	$130.00	/ hour
2-Man Crew	$150.00	/ hour
Materials		at Cost
Fees / Expenses / Subcontractor		Cost plus 10%
Mileage		IRS Standard Mileage Rate

Materials such as blueprints, field stakes, hubs, lath, and survey markers, will be charged at actual cost.

Expenses and fees, such as interim travel and subsistence, telephone, newspaper publication fees, jurisdictional agency fees (for filing, permits, reviews, recording, etc.), subsurface investigations, laboratory testing, and subcontractor work approved by the client, will be charged at actual cost plus 10% of the reimbursed cost for administration thereof.

The use of GPS or Robotic Survey instrument is included with a one man crew rate.

Rates published by Fisher Engineering or Chastain & Associates, LLC are subject to change.

Effective: January 1, 2020

625-A South Earl Avenue | Lafayette, IN 47904
P: 765.448.1535 | www.fisher-assoc.net

FISHER ENGINEERING
Affiliate of Chastain & Associates LLC

AGREEMENT FOR PROFESSIONAL SERVICES

PROJECT DATA -	DATE OF AGREEMENT:	March 26, 2020 JOB NO.: 7565
	PROJECT NAME:	City of Lafayette - Main & Kossuth
	START DATE:	April 1, 2020
	EST. COMPLETION DATE:	June 30, 2020
	LOCATION:	**Loeb Stadium / Main & Kossuth Intersection**
	CLIENT:	City of Lafayette
	CLIENT CONTACT:	Jeromy Grenard
	BILLING ADDRESS:	20 North 6th Street, Lafayette, 47901
	CLIENT PHONE #:	765.807.1050

SCOPE OF SERVICES- Refer to PROPOSAL FOR PROFESSIONAL SERVICES, dated March 25, 2020
Phase I Land Surveying and Engineering Design services itemized as items 1 through 6
The fee not to exceed the amount quoted below.

FEE BASIS -

☐ Lump Sum Amount:

☒ Estimated Cost (figured on time and materials basis): $47,995.00

CONDITIONS - THE CONDITIONS UNDER WHICH THE ABOVE STATED SERVICES ARE BEING PROVIDED ARE SET OUT ON THE ATTACHED PAGE TITLED "TERMS AND CONDITIONS" AND ARE INCORPORATED HEREIN BY REFERENCE. THE ABOVE INFORMATION IS A SUMMARY OF OUR AGREEMENT FOR PERFORMANCE OF THE WORK DESCRIBED. **PLEASE INDICATE YOUR APPROVAL AND ACCEPTANCE OF THIS CONTRACT BY HAVING AN AUTHORIZED PERSON SIGN BELOW.**

ACCEPTANCE - THE UNDERSIGNED HEREBY STATES THAT HE/SHE IS THE OWNER OR DULY AUTHORIZED AGENT OF THE OWNER, UNDERSTANDS AND AGREES TO THE TERMS AND CONDITIONS AS STATED FOR THIS PROJECT AND DIRECTS THE CONSULTANT TO PROCEED WITH THE WORK AS SHOWN ABOVE AS "SCOPE OF SERVICES" AND WILL COMPENSATE THE CONSULTANT IN ACCORDANCE WITH THE FEE BASIS.

DATE _____ OWNER _____

BY _____

TITLE _____

FISHER ENGINEERING

DATE 3/26/2020 BY Kyle K. Betz

PRINTED Kyle K. Betz

Mailing Address:
FISHER ENGINEERING, 625 S. Earl Avenue, Suite A, Lafayette, IN 47904

CITY OF LAFAYETTE, INDIANA

STANDARD TERMS AND CONDITIONS
PROFESSIONAL SERVICE CONTRACTS

1. **Billing**. On hourly, not to exceed, contracts, services may be billed monthly for the hours and costs expended during that period. Services under fixed fee or lump sum contracts may be billed monthly on the estimate of the percentage of work completed.

2. **Employment**. During the term of the Agreement, the Consultant shall not engage on this project on a full or part-time basis any professional or technical personnel who are, or have been at any time during the period of the Agreement, in the employ of the City, except regularly retired employees.

3. **Ownership of Documents**. All reports, tables, figures, drawings, specifications, boring logs, field data, field notes, laboratory test data, calculations, estimated and other documents prepared by Consultant shall remain the property of the Consultant. The City shall be entitled to copies or reproducible sets of any of the aforesaid.

4. **Insurance**. The Consultant shall at its own expense maintain in effect during the term of the Agreement the following insurance with limits as shown or greater:

A. General Liability (including automobile) – combined single limit of $2,000,000. The City shall be named as Additional Insured and be given a 30 day notice of cancellation, non-renewal or significant change of coverage. Consultant's insurance shall be written on a "primary" basis and the City's insurance program shall be in excess of all of Consultant's available coverage.

B. Worker's Compensation – statutory limit. Workers Compensation shall include a Waiver of Subrogation endorsement in favor of the City.

C. Professional Liability for protection against claims arising out of the performance of professional services caused by negligent error, omission or act in the amount of $2,000,000.

D. The Consultant shall provide Certificates of Insurances indicating the aforesaid coverage.

5. **Successors and Assigns**. Neither the City nor the Consultant shall assign, sublet or transfer their interest in the Agreement without the written consent of the other.

6. **Termination of Agreement**. The Agreement may be terminated by either party should the other party fail to substantially perform in accordance with the terms through no fault of the other upon fifteen (15) days written notice. The Agreement may be terminated by the City for convenience upon thirty (30) days written notice to Consultant. In the event of termination, due to any reason other than the fault of the Consultant, the Consultant shall be paid for services performed to termination date, including reimbursable.

7. **Dispute Resolution**. All claims or disputes of the Consultant and the City arising out of or relating to the Agreement, or the breach thereof, shall first be submitted to non-binding mediation. If a claim or dispute is not resolved by mediation, the party making the claim or alleging a dispute shall have the right to institute any legal or equitable proceedings in the Tippecanoe Superior or Circuit Court. The prevailing party shall be entitled to recover attorney fees and costs.

8. **Indemnities**. Consultant and City each agree to indemnify and hold the other harmless, and their respective officers, employees, agents and representatives from and against liability for all claims, losses, damages or expenses caused by the indemnifying party's negligent acts, errors or omissions. In the event claims, losses and damages or expenses are caused by the joint or concurrent negligence of the City and Consultant, they shall be borne by each party in proportion to its negligence.

9. **E-Verify**. Consultant must enroll in and verify the work eligibility status of all newly hired employees of the Consultant through the E-Verify program operated by the United States Department of Homeland Security. If the E-Verify program ceases to exist, the Consultant will not be required to verify the work eligibility status of newly hired employees through the E-Verify program. The Consultant affirms under penalties for perjury that the Consultant does not knowingly employ an unauthorized alien.

10. **Contracting with Iran**. Consultant certifies that under penalties of perjury that it does not engage in investment activities in Iran as more particularly described in Indiana Code 5-22-16.5.

11. **Tobacco Free Policy**. Consultant, subcontractors and suppliers shall comply with the City of Lafayette's Tobacco Free Workplace Policy while on the job-site.

12. **Compliance with Laws**. The Consultant specifically agrees that in the performance of the services herein enumerated by the Consultant or a subcontractor or anyone acting on behalf of either, that each will comply with all State, Federal and Local Statutes, Ordinances and Regulations.

13. **Changes in Work**. In the event that either the City or Consultant determine that a major change in scope, character or complexity of the work is needed after the work has progressed as directed by the City, both parties in the exercise of their reasonable judgment shall negotiate the changes and the Consultant shall not commence the additional work or the change of the scope of work until a supplemental agreed is executed and the City has provided written notice to the Consultant to proceed.

14. **Delays and Extensions**. The Consultant agrees that no change or claim for damages shall be made by if for any minor delays from any cause whatsoever during the progress of any portion of the services specified in the Agreement. Any such delays shall be compensated for by an extension of time for such period as may be determined by the City, subject to the Consultant's approval. However, it being understood, that permitting the Consultant to proceed

to complete any services, or any part of them after the date to which the time of completion may have been extended, shall in no way operate as a waiver on the part of the City or any of its rights herein.

15. **Standard in Practice**. The Consultant will strive to conduct services under the Agreement in a manner consistent with that level of care and skill ordinarily exercised by members of the professional currently practicing in the same locality under similar conditions as of the date of the Agreement.

16. **Waiver of Contract Breach**. The waiver of one party of any breach of the Agreement or the failure of one party to enforce at any time, or for any period of time, any provisions hereof, shall be limited to the particular instances, shall not operate or be deemed to waive any future breaches of this Agreement and shall not be construed to be a waiver of any provision, except for that particular instance.

17. **Entire Understanding of Agreement**. The Agreement represents and incorporated the entire understanding of the parties hereto, and each party acknowledges that there are no warranties, representations, covenant or understandings of any kind, matter or description whatsoever, made by either party to the other except as expressly set forth herein. City and Consultant hereby agree that any purchase orders, invoices, confirmations, acknowledgments or other similar documents executed or delivered with respect to the subject matter hereof that conflict with the terms of the Agreement shall be null, void and without effect to the extend they conflict with the terms of the Agreement.

18. **Non-Discrimination**. Pursuant to Indiana and Federal law, the Consultant and the Consultant's subcontractors, if any, shall not discriminate against any employee or applicant for employment, to be employed in the performance of the work under the Agreement, with respect to hire, tenure, terms, conditions or privileges of employment or any matter directly or indirectly related to employment because of race, color, religion, sex, disability, national origin or ancestry. Breach of this covenant may be regarded as a material breach of the Agreement.

19. **Amendments**. The Agreement may only be amended, supplemented or modified by written documents executed in the same manner as the Agreement.

20. **Governing Law**. The Agreement and all of the terms and provisions shall be interpreted and construed according to the laws of the State of Indiana. Should any clause, paragraph, or other part of this Agreement be held or declared to be void or illegal, for any reason, by any court having competent jurisdiction, all other clause, paragraph or other part of the Agreement, shall remain in full force and effect.

21. **Public Record**. The Consultant acknowledges that the City will not treat the Agreement as containing confidential information and may post this Agreement on the Indiana Transparency Portal as required by IC § 5-14-3.8-3.5.

CHANGE ORDER

CONSTRUCTION MANAGER-ADVISER EDITION

Owner	☐
Construction Manager	☐
Architect	☐
Contractor	☐
Field	☐
Other	☐

PROJECT: *(Name and address)*
Loeb Stadium
Main Street and Wallace Street
Lafayette, Indiana

TO CONTRACTOR: *(Name and address)*
J.R. Kelly Company, Inc.
3450 Concord Road
Lafayette, IN 47909

CHANGE ORDER NO.: **BP-1-4**

INITIATION DATE: **February 14, 2020**

PROJECT NOS.: **6617**

CONTRACT FOR: **BP #1 - General Trades**

CONTRACT DATE: **June 4, 2019**

The Contract is changed as follows:

6617.035 - Main street remediation.	**Add**	**$36,953.00**
6617.038 - Waterline relocation at the zoo parking lot.	**Add**	**$14,104.00**
	TOTAL	**$51,057.00**

Not valid until signed by the Owner, Construction Manager, Architect and Contractor.

The original (Contract Sum) (Guaranteed Maximum Price) was	**$**	**10,480,000.00**
Net change by previously authorized Change Orders	**$**	**-13,362.00**
The (Contract Sum) (~~Guaranteed Maximum Price~~) prior to this Change Order was	**$**	**10,466,638.00**
The (Contract Sum) (~~Guaranteed Maximum Price~~) will be (increased) (~~decreased~~) (~~unchanged~~) by this Change Order	**$**	**51,057.00**
The new (Contract Sum) (~~Guaranteed Maximum Price~~) including this Change Order will be	**$**	**10,517,695.00**
The Contract Time will be (~~increased~~) (~~decreased~~) (unchanged) by		**(0) days**
The dated of Substantial Completion as of the date of this Change Order therefore is		**Unchanged**

NOTE: This summary does not reflect changes in the Contract Sum, Contract Time or Guaranteed Maximum Price which have been authorized by Construction Change Directive.

Kettelhut Construction, Inc.
CONSTRUCTION MANAGER

740 Sagamore Parkway S., Lafayette, IN 47905
ADDRESS

BY 2/14/2020 DATE

American Structurepoint
ARCHITECT

9025 River Road, Suite 200, Indianapolis, IN 46240
ADDRESS

BY 02.14.2020 DATE

J.R. Kelly Company, Inc.
CONTRACTOR

3450 Concord Road, Lafayette, IN 47909
ADDRESS

Robert Mutzl 2/14/2020
BY DATE

City of Lafayette, Indiana
OWNER

20 N. 6th Street, Lafayette, IN 47901
ADDRESS

Jeremy L. Brenard 4/15/2020
BY DATE

KETTELHUT CONSTRUCTION, INC. General Contractor/Construction Manager

740 Sagamore Parkway South
Lafayette, IN 47905
(765) 447-2181
Fax (765) 447-7122

January 20, 2020

Mr. Dan McCloskey
American Structurepoint, Inc.
9025 River Road, Suite 200
Indianapolis, IN 46240

Re: Loeb Stadium Renovation
Lafayette, Indiana
Kettelhut Project No. 6617

Gentlemen:

Enclosed please find cost documentation from applicable Contractors regarding T&M work, as it pertains to removal of 8" of soil and replacement with 8" of compacted #53 stone as recommended by A&W and authorized by the City of Lafayette on November 19, 2019. We have yet to receive responses from Contractors labeled N/R, but do not anticipate any other costs or credits than those shown below.

1.	BP #1 – General Trades	JR Kelly Co., Inc.	$ 36,953.00
2.	BP #2 – Masonry	James Scharer Masonry, Inc.	N/R
3.	BP #3 – Steel	Almet, Inc.	N/R
4.	BP #4 – Roofing	Horning Roofing & Sheet Metal Co., LLC	N/R
5.	BP #5 – Alum.	Central Indiana Glass & Glazing, Inc.	N/R
6.	BP #6 – Fire Sprinklers	Dalmatian Fire, Division of Shambaugh & Son, L.P.	N/R
7.	BP #7 – Mechanical	D. A. Dodd, LLC	N/R
8.	BP #8 – Electrical	Huston Electric, Inc.	N/R
9.	BP #9 – Sports Lighting	Custer Electric, Inc.	N/R
10.	BP #10 – Scoreboard		
11.	BP #11 – Turf	Sprinturf, Inc.	N/R
12.	BP #12 – Stadium Seat	Irwin Seating Company	N/R
13.	BP #13 – Food Service	C&T Design & Equipment Co.	N/R
			$ 36,953.00

After your review, if this cost data is approved by your firm and the Owner, please advise in order for a Change Order to be initiated.

Sincerely,

KETTELHUT CONSTRUCTION, INC.

D. Alex Gonzalez
Executive Vice President

DAG: jas

Enclosure

cc: Field Office
City of Lafayette w/enclosure
Field Order 6617.035

J. R. KELLY COMPANY
GENERAL CONTRACTORS

~~November 27, 2019~~
January 20, 2020

Kettelhut Construction Inc.
740 Sagamore Parkway South
Lafayette, IN 47905

Attn: Alex Gonzalez

Re: Main Street Soil Remediation Proposal (KCI Field Order 6617.035) REVISED
Loeb Stadium – General Trades

J.R. Kelly Company is pleased to provide T&M cost information for the removal of 8" of original soil and replacement with 8" of compacted #53 stone as recommended by Alt Witzig. As directed in your 11/19/19 email R&W performed this work on a T&M basis. The cost for the work is:

R&W Contracting 11/20 Ticket	~~$16,405~~	$15,435
R&W Contracting 11/21 Ticket	~~$5,087~~	$4,521
R&W Contracting 11/22 Ticket	~~$14,889~~	$14,889
Subtotal	~~$36,381~~	$34,845
JRK OH&P 5%	~~$1,819~~	$1,742
Bond	~~$382~~	$366

TOTAL COST FOR WORK DESCRIBED ABOVE: ~~$38,582~~ **$36,953**

Please issue a Change Order for this work so that we can incorporate this change into our contract and billings. If you have any questions or need additional information please contact our office at your earliest convenience. Thank you for the opportunity to work with you on this project.

Sincerely,

Robert Mutzl P.E.
Executive VP

Attachments: R&W Pricing and T&M Sheets

(765) 772-3991 FAX (765) 772-3996
3450 CONCORD ROAD LAFAYETTE, IN 47909

Request for Change - Loeb Stadium

To: 11/20/2019
Rob Mutzl
JR Kelly Company

From:
R&W Contracting, Inc.
3131 Klondike Road
West Lafayette, IN 47906
765-499-9390

Undercut Main Street Subgrade 8" - Replaced with #53 Stone

Description	Rate	Quantity		Total
Linkbelt 290	200	8	HR	1,600
Case 1150G	110	8	HR	880
GPS Guidance	75	8	HR	600
IR-SD 70 Compactor	75	8	HR	600
Triaxle Dump Truck with Driver (R&W)	100	8	HR	800
Subcontracted Dump Truck With Driver	98	31.5	HR	3,087
Superintendent	70	9	HR	630
Operator	60	24	HR	1,440
Dump Fees	50	23	EA	1,150
#53 Stone (Delivered)	14.25	100	TN	1,425
#53 Stone (Picked Up)	7	260	TN	1,820
Subtotal			$	14,032
P&OH (10%)			$	1,403
Total			**$**	**15,435**

R & W CONTRACTING, INC.
3131 Klondike Rd.
W. Lafayette, IN 47906-5213
Phone (765) 463-1174
Fax (765) 497-7782

Time & Material Report

Date: 11/20/2019
Job #: Loeb Stadium
Supervisors Name: Cody Sandefur

Description of Work Performed: Under cut main St 8" below sub grade, refilled & compacted 53 stone.

Personnel: Operator, Truck Drivers, Laborer, Pump Kid, Flagger

Material: (Attach shipping list or invoice):

HOURS:		RATE	EXTENSION
	EXCAVATOR:		
8	Linkbelt 4300Q	$200	
	Linkbelt 290	$200	
	Komatsu PC 200 LC-6	$150	
	Komatsu PC 138	$100	
	Komatsu PC 78	$75	
	Takehuci TB 145	$50	
	BULLDOZERS		
8	Case 1450B	$110	
	Case 1150G	$110	
8	Case 850B	$75	
	GPS Guidance	$75	
	BACKHOES & SKIDLOADERS		
	Fermac	$50	
	Gehl CTL 75	$65	
	Gehl CTL 70	$65	
	COMPACTORS		
8	IR-SD 70	$75	
	IR-SPF 48	$60	
	Large Plate compactor	$25	
	Small Plate Compactor	$15	
	OTHER EQUIPMENT:		
	Service Truck	$50	
8	Tri-axle dump truck w/ Driver R&W Trucks	$100	
31.5	Other: Subcontractor - Dump Trucks	98	
	LABOR		
9	Field Superintendent	$70	
24	Operator	$60	
	Laborer	$50	
	Traffic Control	$35	

Field Superintendent signiture:
(sign and return copy to GC and R&W Contracting office)

C & S EXCAVATING

822 Main Street
P.O. Box 248
Lafayette, IN 47902
Cell: (765) 479-3185
Office: (765) 743-5988

Contractor Worked for _____

Truck Contractor _____ Truck # _____ Driver _____

Time Started _____ Lunch _____ Time Stopped _____ Hours _____

Month _____ Day of Week _____ Date _____

TICKET NO.	NET WEIGHT	DESCRIPTION	FROM	TO

Driver must have copy signed to be paid. WHITE - OFFICE COPY Foreman _____

C & S EXCAVATING

822 Main Street
P.O. Box 248
Lafayette, IN 47902
Cell: (765) 479-3185
Office: (765) 743-5988

Contractor Worked for R & W

Truck Contractor C & S Truck # 3 Driver MILNES

Time Started 10:30 Lunch _____ Time Stopped 4:30 Hours _____

Month NOVEMBER Day of Week MONDAY Date 11-30-09

TICKET NO.	NET WEIGHT	DESCRIPTION	FROM	TO
R & W	111	#11 STONE	LOGAN	

Driver must have copy signed to be paid. WHITE - OFFICE COPY Foreman

SOLID FINISH CONSTRUCTION, Inc. EXCAVATION & CONCRETE

DRIVER DAILY TIMESHEET

No. 1110

DATE: 11-20-19 PRINT NAME: BRIAN S. McMASTERS EMPLOYEE #: _____

PRINT TRUCKING COMPANY: SOLID FINISH TRUCK #: 74TRI LEASED TO: _____

JOB #: R&D LOCB STA.

START TIME	END TIME	LUNCH	HOURS	PHASE	ITEM #	TONS	TICKET #	MATERIAL
10:00 AM	4:00 PM					NH		DIG OUT
						19.65	145007830	5" STONE

STRAIGHT TIME: 10 OVERTIME: 0 TOTAL HOURS: 10

DAILY MILEAGE START: _____ STOP: _____ FUEL/OIL: _____

DRIVER SIGNATURE: Brian S McMasters SUPERVISOR SIGNATURE: _____

NOTE: WHEN HAULING BY THE TON, ATTACH COPY OF TICKETS. ALL TRAVEL TIME NEEDS TO BE INCLUDED IN THE TOTAL NUMBER OF HOURS. THE FIELD SUPERVISOR MUST SIGN THIS TICKET TO BE PAID.

White-Solid Finish Yellow: Trucking Company Pink: Driver

SOLID FINISH CONSTRUCTION, Inc. EXCAVATION & CONCRETE

DRIVER DAILY TIMESHEET

No. 1082

DATE: [illegible] PRINT NAME: James Miller EMPLOYEE #: _____

PRINT TRUCKING COMPANY: Solid Finish TRUCK #: 77 LEASED TO: R&W

JOB #: Loco

START TIME	END TIME	LUNCH	HOURS	PHASE	ITEM #	TONS	TICKET #	MATERIAL
9:15	4:00p					[illegible]		Dri
								53 [illegible]

STRAIGHT TIME: _____ OVERTIME: _____ TOTAL HOURS: _____

DAILY MILEAGE [illegible] START: _____ STOP: _____ FUEL/OIL: _____

DRIVER SIGNATURE: James Miller SUPERVISOR SIGNATURE: _____

NOTE: WHEN HAULING BY THE TON, ATTACH COPY OF TICKETS. ALL TRAVEL TIME NEEDS TO BE INCLUDED IN THE TOTAL NUMBER OF HOURS. THE FIELD SUPERVISOR MUST SIGN THIS TICKET TO BE PAID.

White-Solid Finish Yellow: Trucking Company Pink: Driver

SOLID FINISH CONSTRUCTION, INC. EXCAVATION & CONCRETE

DRIVER DAILY TIMESHEET

No. 1127

DATE: 1-20-2019 PRINT NAME: [illegible] EMPLOYEE #: _____

PRINT TRUCKING COMPANY: [illegible] TRUCK #: [illegible] LEASED TO: [illegible]

JOB #: _____

START TIME	END TIME	LUNCH	HOURS	PHASE	ITEM #	TONS	TICKET #	MATERIAL
		N-L		[illegible]		MH		D/O
9:00	5:00	N-L		" "		1		153

STRAIGHT TIME: _____ OVERTIME: _____ TOTAL HOURS: _____

DAILY MILEAGE START: _____ STOP: _____ FUEL/OIL: _____

DRIVER SIGNATURE: [illegible] SUPERVISOR SIGNATURE: [illegible]

NOTE: WHEN HAULING BY THE TON, ATTACH COPY OF TICKETS. ALL TRAVEL TIME NEEDS TO BE INCLUDED IN THE TOTAL NUMBER OF HOURS. THE FIELD SUPERVISOR MUST SIGN THIS TICKET TO BE PAID.

White-Solid Finish Yellow: Trucking Company Pink: Driver

Solid Finish Construction, Inc.
4666 East 1175 South
Galveston, IN 46932
574-699-7249

NO. 0870

TIME & MATERIAL DAILY LOG

PROJECT NAME: _____ JOB No: _____

CONTRACTOR: _____

LABOR USED			
DATE	TECHNICIAN NAME	REG. HOURS	OT HOURS

DESCRIPITION OF WORK (Include location(s) of work)

MATERIAL USED	QUANTITY

EQUIPMENT USED	QUANTITY

Contractors Representative: X _____

Print Name: _____

Date: _____

The above work and material has been received and inspected and is accepted as satisfactory and subject to terms and conditions listed below. Terms & Conditions: All invoices net, due & payable immediately upon presentation, unless special arrangements made and approved by our credit department. Maximum legal rate of interest will be charged on all accounts after due date, and, in event collection is necessary, reasonable attorney's fees will be added. Sales tax will be charged wherever applicable.

Hanson **Plant: 5791200**

Monon Stone Quarry
SOURCE 2409 Q# 022197
38 E. Quarry Rd. PH: (219)253-1012
Monon, IN 47959

11/20/2019 11:33:59AM In : **11:28:19AM**

Customer: 4952009 R & W CONTRACTING INC
Order : 183602 D579 - Loeb Stadium 2019-2020
Ship Ref:
Cust Ref: Loeb Stadium Lafayette In.
Product : 01801 INDIANA #53 CAPP
P.O. : 1915 Scott Street
Release ID:

Tkt. No. 1450074794

	UNIT	TOTALS
Material:		
Freight:		
Tax:		
Fee / Fuel:		
Other Chrg:	No	

	Pounds	Tons
Gross	65,900	32.95
Tare	24,680	12.34
Net	41,220	20.61

20.61 Ton

Today: 20.61 Loads: 1

Carrier : 9598387 J&J WILLIAMS TRUCKING LLC
Vehicle : 579EAR21 EARTH TRANSPORT

By acceptance of this ticket (with or without signature), driver accepts on behalf of himself/his employer sole responsibility to ensure that the load received is within the weight limit authorized by law and shall hold seller harmless against any and all claims with respect to same

Received: _____ Cust: _____

Weighmaster: Worrell, Andy P/D Status: **Deliver** Copy 3 Scale: 1

Hanson **Plant: 5791200**

Monon Stone Quarry
SOURCE 2409 Q# 022197
38 E. Quarry Rd. PH: (219)253-1012
Monon, IN 47959

11/20/2019 12:40:09PM In : **12:34:20PM**

Customer: 4952009 R & W CONTRACTING INC
Order : 183602 D579 - Loeb Stadium 2019-2020
Ship Ref:
Cust Ref: Loeb Stadium Lafayette In.
Product : 01801 INDIANA #53 CAPP
P.O. : 1915 Scott Street
Release ID:

Tkt. No. 1450074808

	UNIT	TOTALS
Material:		
Freight:		
Tax:		
Fee / Fuel:		
Other Chrg:	No	

	Pounds	Tons
Gross	67,820	33.91
Tare	24,480	12.24
Net	43,340	21.67

21.67 Ton

Today: 42.28 Loads: 2

Carrier : 9598387 J&J WILLIAMS TRUCKING LLC
Vehicle : 579EAR95 Earth

By acceptance of this ticket (with or without signature), driver accepts on behalf of himself/his employer sole responsibility to ensure that the load received is within the weight limit authorized by law and shall hold seller harmless against any and all claims with respect to same

Received: _____ Cust: _____

Weighmaster: Worrell, Andy P/D Status: **Deliver** Copy 3 Scale: 1

Hanson

Plant: 5791200

Monon Stone Quarry
SOURCE 2409 Q# 022197
38 E. Quarry Rd. PH: (219)253-1012
Monon, IN 47959

11/20/2019 1:21:20PM In : **12:00:00AM**
Customer: 4952009 R & W CONTRACTING INC
Order : 183602 D579 - Loeb Stadium 2019-2020
Ship Ref:
Cust Ref: Loeb Stadium Lafayette In.
Product : 01801 INDIANA #53 CAPP
P.O. : 1915 Scott Street
Release ID:

Tkt. No. 1450074815

	UNIT	TOTALS
Material:		
Freight:		
Tax:		
Fee / Fuel:		
Other Chrg:	No	

	Pounds	Tons
Gross	66,080	33.04
Tare	24,680 *	12.34 *
Net	41,400	20.70
	* P. T.	**20.70** Ton

Today: 62.98 Loads: 3

Carrier : 9598387 J&J WILLIAMS TRUCKING LLC
Vehicle : 579EAR21 EARTH TRANSPORT

By acceptance of this ticket (with or without signature), driver accepts on behalf of himself/his employer sole responsibility to ensure that the load received is within the weight limit authorized by law and shall hold seller harmless against any and all claims with respect to same

Received: _____ Cust: _____

Weighmaster: Worrell, Andy P/D Status: **Deliver**

Copy 1 Scale: 1

Hanson

Plant: 5791200

Monon Stone Quarry
SOURCE 2409 Q# 022197
38 E. Quarry Rd. PH: (219)253-1012
Monon, IN 47959

11/20/2019 2:26:12PM In : **12:00:00AM**
Customer: 4952009 R & W CONTRACTING INC
Order : 183602 D579 - Loeb Stadium 2019-2020
Ship Ref:
Cust Ref: Loeb Stadium Lafayette In.
Product : 01801 INDIANA #53 CAPP
P.O. : 1915 Scott Street
Release ID:

Tkt. No. 1450074827

	UNIT	TOTALS
Material:		
Freight:		
Tax:		
Fee / Fuel:		
Other Chrg:	No	

	Pounds	Tons
Gross	67,980	33.99
Tare	24,480 *	12.24 *
Net	43,500	21.75
	* P. T.	**21.75** Ton

Today: 84.73 Loads: 4

Carrier : 9598387 J&J WILLIAMS TRUCKING LLC
Vehicle : 579EAR95 Earth

By acceptance of this ticket (with or without signature), driver accepts on behalf of himself/his employer sole responsibility to ensure that the load received is within the weight limit authorized by law and shall hold seller harmless against any and all claims with respect to same

Received: _____ Cust: _____

Weighmaster: Worrell, Andy P/D Status: **Deliver**

Copy 1 Scale: 1

Hanson **Plant: 5791200**

Monon Stone Quarry
SOURCE 2409 Q# 022197
38 E. Quarry Rd. PH: (219)253-1012
Monon, IN 47959

11/20/2019 3:03:34PM In : **12:00:00AM**

Customer: 4952009 R & W CONTRACTING INC
Order : 183602 D579 - Loeb Stadium 2019-2020
Ship Ref:
Cust Ref: Loeb Stadium Lafayette In.
Product : 01801 INDIANA #53 CAPP
P.O. : 1915 Scott Street
Release ID:

Tkt. No. 1450074838

	UNIT	TOTALS
Material:		
Freight:		
Tax:		
Fee / Fuel:		
Other Chrg:	No	

	Pounds	Tons
Gross	65,780	32.89
Tare	24,680 *	12.34 *
Net	41,100	20.55

* P.T. **20.55** Ton

Today: 105.28 Loads: 5

Carrier : 9598387 J&J WILLIAMS TRUCKING LLC
Vehicle : 579EAR21 EARTH TRANSPORT

By acceptance of this ticket (with or without signature), driver accepts on behalf of himself/his employer sole responsibility to ensure that the load received is within the weight limit authorized by law and shall hold seller harmless against any and all claims with respect to same

Received: _____ Cust: _____

Weighmaster: Worrell, Andy P/D Status: **Deliver** Copy 3 Scale: 1

Hanson **Plant: 5791200**

Monon Stone Quarry
SOURCE 2409 Q# 022197
38 E. Quarry Rd. PH: (219)253-1012
Monon, IN 47959

11/20/2019 11:14:08AM In : **11:01:21AM**

Customer: 4952009 R & W CONTRACTING INC
Order : 186296 P579 - Loeb Stadium (2019-2020)
Ship Ref:
Cust Ref: Loeb Stadium Lafayette In.
Product : 01801 INDIANA #53 CAPP
P.O. :
Release ID:

Tkt. No. 1450074792

	UNIT	TOTALS
Material:		
Freight:		
Tax:		
Fee / Fuel:		
Other Chrg:	No	

	Pounds	Tons
Gross	67,720	33.86
Tare	28,260	14.13
Net	39,460	19.73

19.73 Ton

Today: 19.73 Loads: 1

Carrier :
Vehicle : 579CNS3 C & S

By acceptance of this ticket (with or without signature), driver accepts on behalf of himself/his employer sole responsibility to ensure that the load received is within the weight limit authorized by law and shall hold seller harmless against any and all claims with respect to same

Received: _____ Cust: _____

Weighmaster: Worrell, Andy P/D Status: **Pickup** Copy 3 Scale: 1

Hanson

Plant:5791200

Monon Stone Quarry
SOURCE 2409 Q# 022197
38 E. Quarry Rd. PH: (219)253-1012
Monon, IN 47959

11/20/2019 11:36:29AM In : **12:00:00AM**
Customer: 4952009 R & W CONTRACTING INC
Order : 186296 P579 - Loeb Stadium (2019-2020)
Ship Ref:
Cust Ref: Loeb Stadium Lafayette In.
Product : 01801 INDIANA #53 CAPP
P.O. :
Release ID:

Tkt. No. 1450074795

	UNIT	TOTALS
Material:		
Freight:		
Tax:		
Fee / Fuel:		
Other Chrg:	No	

	Pounds	Tons
Gross	71,200	35.60
Tare	28,540 *	14.27 *
Net	42,660	21.33

* P. T. 21.33 Ton

Today: 41.06 Loads: 2

By acceptance of this ticket (with or without signature), driver accepts on behalf of himself/his employer sole responsibility to ensure that the load received is within the weight limit authorized by law and shall hold seller harmless against any and all claims with respect to same

Carrier :
Vehicle : 579RNW07 R&W

Received: _____ Cust: _____

Weighmaster: Worrell, Andy P/D Status: **Pickup** Copy 2 Scale: 1

Hanson

Plant: 5791200

Monon Stone Quarry
SOURCE 2409 Q# 022197
38 E. Quarry Rd. PH: (219)253-1012
Monon, IN 47959

11/20/2019 12:06:04PM In : **12:00:00AM**
Customer: 4952009 R & W CONTRACTING INC
Order : 186296 P579 - Loeb Stadium (2019-2020)
Ship Ref:
Cust Ref: Loeb Stadium Lafayette In.
Product : 01801 INDIANA #53 CAPP
P.O. :
Release ID:

Tkt. No. 1450074802

	UNIT	TOTALS
Material:		
Freight:		
Tax:		
Fee / Fuel:		
Other Chrg:	No	

	Pounds	Tons
Gross	66,700 m	33.35 m
Tare	27,200 *	13.60 *
Net	39,500 m	19.75 m

m Manual Weight, * P.T. 19.75 Ton

Today: 79.05 Loads: 4

By acceptance of this ticket (with or without signature), driver accepts on behalf of himself/his employer sole responsibility to ensure that the load received is within the weight limit authorized by law and shall hold seller harmless against any and all claims with respect to same

Carrier :
Vehicle : 579CNS2 C & S

Received: _____ Cust: _____

Weighmaster: Worrell, Andy P/D Status: **Pickup** Copy 3 Scale: 1

Hanson

Plant:5791200

Monon Stone Quarry
SOURCE 2409 Q# 022197
38 E. Quarry Rd. PH: (219)253-1012
Monon, IN 47959

11/20/2019 **1:09:16PM** In : **12:00:00AM**
Customer: 4952009 R & W CONTRACTING INC
Order : 186296 P579 - Loeb Stadium (2019-2020)
Ship Ref:
Cust Ref: Loeb Stadium Lafayette In.
Product : 01801 INDIANA #53 CAPP
P.O. :
Release ID:

Tkt. No. 1450074813

	UNIT	TOTALS
Material:		
Freight:		
Tax:		
Fee / Fuel:		
Other Chrg:	No	

	Pounds	Tons
Gross	67,920	33.96
Tare	28,260 *	14.13 *
Net	39,660	19.83

* P. T. 19.83 Ton

Today: 99.10 Loads: 5

By acceptance of this ticket (with or without signature), driver accepts on behalf of himself/his employer sole responsibility to ensure that the load received is within the weight limit authorized by law and shall hold seller harmless against any and all claims with respect to same

Carrier :
Vehicle : 579CNS3 C & S

Received:_____ Cust:_____

Weighmaster: Worrell, Andy P/D Status: **Pickup** Copy 2 Scale: 1

Hanson

Plant: 5791200

Monon Stone Quarry
SOURCE 2409 Q# 022197
38 E. Quarry Rd. PH: (219)253-1012
Monon, IN 47959

11/20/2019 **1:33:28PM** In : **12:00:00AM**
Customer: 4952009 R & W CONTRACTING INC
Order : 186296 P579 - Loeb Stadium (2019-2020)
Ship Ref:
Cust Ref: Loeb Stadium Lafayette In.
Product : 01801 INDIANA #53 CAPP
P.O. :
Release ID:

Tkt. No. 1450074818

	UNIT	TOTALS
Material:		
Freight:		
Tax:		
Fee / Fuel:		
Other Chrg:	No	

	Pounds	Tons
Gross	71,660	35.83
Tare	28,540 *	14.27 *
Net	43,120	21.56

* P. T. 21.56 Ton

Today: 120.66 Loads: 6

By acceptance of this ticket (with or without signature), driver accepts on behalf of himself/his employer sole responsibility to ensure that the load received is within the weight limit authorized by law and shall hold seller harmless against any and all claims with respect to same

Carrier :
Vehicle : 579RNW07 R&W

Received:_____ Cust:_____

Weighmaster: Worrell, Andy P/D Status: **Pickup** Copy 1 Scale: 1

Hanson

Plant: 5791200

Monon Stone Quarry
SOURCE 2409 Q# 022197
38 E. Quarry Rd. PH: (219)253-1012
Monon, IN 47959

11/20/2019 1:43:41PM In : **12:00:00AM**
Customer: 4952009 R & W CONTRACTING INC
Order : 186296 P579 - Loeb Stadium (2019-2020)
Ship Ref:
Cust Ref: Loeb Stadium Lafayette In.
Product : 01801 INDIANA #53 CAPP
P.O. :
Release ID:

Tkt. No. 1450074820

	UNIT	TOTALS
Material:		
Freight:		
Tax:		
Fee / Fuel:		
Other Chrg:	No	

	Pounds	Tons
Gross	67,140	33.57
Tare	27,200 *	13.60 *
Net	39,940	19.97
	* P. T.	19.97 Ton

Today: 140.63 Loads: 7

By acceptance of this ticket (with or without signature), driver accepts on behalf of himself/his employer sole responsibility to ensure that the load received is within the weight limit authorized by law and shall hold seller harmless against any and all claims with respect to same

Carrier :
Vehicle : 579CNS2 C & S

Received:_____ Cust:_____

Weighmaster: Worrell, Andy P/D Status: **Pickup**

Copy 1 Scale: 1

Hanson

Plant: 5791200

Monon Stone Quarry
SOURCE 2409 Q# 022197
38 E. Quarry Rd. PH: (219)253-1012
Monon, IN 47959

11/20/2019 2:02:13PM In : **12:00:00AM**
Customer: 4952009 R & W CONTRACTING INC
Order : 186296 P579 - Loeb Stadium (2019-2020)
Ship Ref:
Cust Ref: Loeb Stadium Lafayette In.
Product : 01801 INDIANA #53 CAPP
P.O. :
Release ID:

Tkt. No. 1450074824

	UNIT	TOTALS
Material:		
Freight:		
Tax:		
Fee / Fuel:		
Other Chrg:	No	

	Pounds	Tons
Gross	64,740	32.37
Tare	30,220 *	15.11 *
Net	34,520	17.26
	* P. T.	17.26 Ton

Today: 157.89 Loads: 8

By acceptance of this ticket (with or without signature), driver accepts on behalf of himself/his employer sole responsibility to ensure that the load received is within the weight limit authorized by law and shall hold seller harmless against any and all claims with respect to same

Carrier :
Vehicle : 579RNW6 579RNW6

Received:_____ Cust:_____

Weighmaster: Worrell, Andy P/D Status: **Pickup**

Copy 1 Scale: 1

Hanson

Plant: 5791200

Monon Stone Quarry
SOURCE 2409 Q# 022197
38 E. Quarry Rd. PH: (219)253-1012
Monon, IN 47959

11/20/2019 2:46:13PM In: **12:00:00AM**
Customer: 4952009 R & W CONTRACTING INC
Order: 186296 P579 - Loeb Stadium (2019-2020)
Ship Ref:
Cust Ref: Loeb Stadium Lafayette In.
Product: 01801 INDIANA #53 CAPP
P.O.:
Release ID:

Tkt. No. 1450074830

UNIT	TOTALS
Material:	
Freight:	
Tax:	
Fee / Fuel:	
Other Chrg: No	

	Pounds	Tons
Gross	67,480	33.74
Tare	28,180 *	14.09 *
Net	39,300	19.65

* Manual P. T. 19.65 Ton

Today: 177.54 Loads: 9

By acceptance of this ticket (with or without signature), driver accepts on behalf of himself/his employer sole responsibility to ensure that the load received is within the weight limit authorized by law and shall hold seller harmless against any and all claims with respect to same

Carrier:
Vehicle: 579SOL74 solid finish

Received:_____ Cust:_____

Weighmaster: Worrell, Andy P/D Status: **Pickup**

Copy 1 Scale: 1

Hanson

Plant: 5791200

Monon Stone Quarry
SOURCE 2409 Q# 022197
38 E. Quarry Rd. PH: (219)253-1012
Monon, IN 47959

11/20/2019 2:54:39PM In: **2:50:00PM**
Customer: 4952009 R & W CONTRACTING INC
Order: 186296 P579 - Loeb Stadium (2019-2020)
Ship Ref:
Cust Ref: Loeb Stadium Lafayette In.
Product: 01801 INDIANA #53 CAPP
P.O.:
Release ID:

Tkt. No. 1450074835

UNIT	TOTALS
Material:	
Freight:	
Tax:	
Fee / Fuel:	
Other Chrg: No	

	Pounds	Tons
Gross	66,920	33.46
Tare	28,620	14.31
Net	38,300	19.15

19.15 Ton

Today: 196.69 Loads: 10

By acceptance of this ticket (with or without signature), driver accepts on behalf of himself/his employer sole responsibility to ensure that the load received is within the weight limit authorized by law and shall hold seller harmless against any and all claims with respect to same

Carrier:
Vehicle: 579SOL77 SOLID FINISH

Received:_____ Cust:_____

Weighmaster: Worrell, Andy P/D Status: **Pickup**

Copy 1 Scale: 1

Hanson

Plant: 5791200

Monon Stone Quarry
SOURCE 2409 Q# 022197
38 E. Quarry Rd. PH: (219)253-1012
Monon, IN 47959

11/20/2019 3:03:00PM In : **12:00:00AM**

Customer: 4952009 R & W CONTRACTING INC
Order : 186296 P579 - Loeb Stadium (2019-2020)
Ship Ref:
Cust Ref: Loeb Stadium Lafayette In.
Product : 01801 INDIANA #53 CAPP
P.O. :
Release ID:

Tkt. No. 1450074837

	UNIT	TOTALS
Material:		
Freight:		
Tax:		
Fee / Fuel:		
Other Chrg:	No	

	Pounds	Tons
Gross	67,500	33.75
Tare	28,260 *	14.13 *
Net	39,240	19.62

* P. T. **19.62** Ton

Today: 216.31 Loads: 11

By acceptance of this ticket (with or without signature), driver accepts on behalf of himself/his employer sole responsibility to ensure that the load received is within the weight limit authorized by law and shall hold seller harmless against any and all claims with respect to same

Carrier :
Vehicle : 579CNS3 C & S

Received: _____ Cust: _____

Weighmaster: Worrell, Andy P/D Status: **Pickup**

Copy 3 Scale: 1

Hanson

Plant: 5791200

Monon Stone Quarry
SOURCE 2409 Q# 022197
38 E. Quarry Rd. PH: (219)253-1012
Monon, IN 47959

11/20/2019 3:07:26PM In : **12:00:00AM**

Customer: 4952009 R & W CONTRACTING INC
Order : 186296 P579 - Loeb Stadium (2019-2020)
Ship Ref:
Cust Ref: Loeb Stadium Lafayette In.
Product : 01801 INDIANA #53 CAPP
P.O. :
Release ID:

Tkt. No. 1450074839

	UNIT	TOTALS
Material:		
Freight:		
Tax:		
Fee / Fuel:		
Other Chrg:	No	

	Pounds	Tons
Gross	67,380	33.69
Tare	28,860 *	14.43 *
Net	38,520	19.26

* Manual P. T. 19.26 Ton

Today: 235.57 Loads: 12

By acceptance of this ticket (with or without signature), driver accepts on behalf of himself/his employer sole responsibility to ensure that the load received is within the weight limit authorized by law and shall hold seller harmless against any and all claims with respect to same

Carrier :
Vehicle : 579SOL78 SOLID FINISH

Received: _____ Cust: _____

Weighmaster: Worrell, Andy P/D Status: **Pickup**

Copy 1 Scale: 1

Hanson **Plant: 5791200**

Monon Stone Quarry
SOURCE 2409 Q# 022197
38 E. Quarry Rd. PH: (219)253-1012
Monon, IN 47959

11/20/2019 3:10:54PM In : **3:01:46PM**

Customer: 4952009 R & W CONTRACTING INC
Order : 186296 P579 - Loeb Stadium (2019-2020)
Ship Ref:
Cust Ref: Loeb Stadium Lafayette In.
Product : 01801 INDIANA #53 CAPP
P.O. :
Release ID:

Tkt. No. 1450074841

	UNIT	TOTALS
Material:		
Freight:		
Tax:		
Fee / Fuel:		
Other Chrg:	No	

	Pounds	Tons
Gross	66,380	33.19
Tare	28,200	14.10
Net	38,180	19.09

19.09 Ton

Today: 254.66 Loads: 13

Carrier :
Vehicle : 579SOL73 SOLID FINISH

By acceptance of this ticket (with or without signature), driver accepts on behalf of himself/his employer sole responsibility to ensure that the load received is within the weight limit authorized by law and shall hold seller harmless against any and all claims with respect to same

Received: _____ Cust: _____

Weighmaster: Worrell, Andy P/D Status: **Pickup** Copy 3 Scale: 1

Hanson **Plant: 5791200**

Monon Stone Quarry
SOURCE 2409 Q# 022197
38 E. Quarry Rd. PH: (219)253-1012
Monon, IN 47959

11/20/2019 3:32:01PM In : **12:00:00AM**

Customer: 4952009 R & W CONTRACTING INC
Order : 186296 P579 - Loeb Stadium (2019-2020)
Ship Ref:
Cust Ref: Loeb Stadium Lafayette In.
Product : 01801 INDIANA #53 CAPP
P.O. :
Release ID:

Tkt. No. 1450074845

	UNIT	TOTALS
Material:		
Freight:		
Tax:		
Fee / Fuel:		
Other Chrg:	No	

	Pounds	Tons
Gross	66,740	33.37
Tare	27,200 *	13.60 *
Net	39,540	19.77

* P. T. 19.77 Ton

Today: 274.43 Loads: 14

Carrier :
Vehicle : 579CNS2 C & S

By acceptance of this ticket (with or without signature), driver accepts on behalf of himself/his employer sole responsibility to ensure that the load received is within the weight limit authorized by law and shall hold seller harmless against any and all claims with respect to same

Received: _____ Cust: _____

Weighmaster: Worrell, Andy P/D Status: **Pickup** Copy 3 Scale: 1

Request for Change - Loeb Stadium

To: 11/21/2019
Rob Mutzl
JR Kelly Company

From:
R&W Contracting, Inc.
3131 Klondike Road
West Lafayette, IN 47906
765-499-9390

Undercut Main Street Subgrade 8" - Replaced with #53 Stone

Description	Rate	Quantity		Total
Linkbelt 290	200	3	HR	600
Case 1150G	110	3	HR	330
GPS Guidance	75	3	HR	225
IR-SD 70 Compactor	75	3	HR	225
Triaxle Dump Truck with Driver (R&W)	100	0	HR	-
Subcontracted Dump Truck With Driver	98	0	HR	-
Superintendent	70	4	HR	280
Operator	60	9	HR	540
Dump Fees	50	4	EA	200
#53 Stone (Delivered)	14.25	120	TN	1,710
#53 Stone (Picked Up)	7	0	TN	-
Subtotal			$	4,110
P&OH (10%)			$	411
Total			**$**	**4,521**

R & W CONTRACTING, INC.
3131 Klondike Rd.
W. Lafayette, IN 47906-5213
Phone (765) 463-1174
Fax (765) 497-7782

Time & Material Report

Date: 11/21/2019
Job #: Loeb Stadium
Supervisors Name: Cody Sondgeroth

Description of Work Performed: refill/compactal 53's — Under cut Main ST 8" Below subgrade

Personnel: Operators, Truck Drivers, Labor

Material: (Attach shipping list or invoice):

HOURS:		RATE	EXTENSION
	EXCAVATOR:		
3	Linkbelt 4300Q	$200	
	Linkbelt 290	$200	
	Komatsu PC 200 LC-6	$150	
	Komatsu PC 138	$100	
	Komatsu PC 78	$75	
	Takehuci TB 145	$50	
	BULLDOZERS		
	Case 1450B		
3	Case 1150G	$110	
	Case 850B	$110	
3	GPS Guidance	$75	
		$75	
	BACKHOES & SKIDLOADERS		
	Fermac	$50	
	Gehl CTL 75	$65	
	Gehl CTL 70	$65	
	COMPACTORS		
3	IR-SD 70	$75	
	IR-SPF 48	$60	
	Large Plate compactor	$25	
	Small Plate Compactor	$15	
	OTHER EQUIPMENT:		
	Service Truck	$50	
	Tri-axle dump truck wil Driver	$100	
	Other:		
	LABOR		
4	Field Superintendent	$70	
9	Operator	$60	
	Laborer	$50	
	Traffic Control	$35	

Field Superintendent signiture:
(sign and return copy to GC and R&W Contracting office)

SOLID FINISH CONSTRUCTION, Inc EXCAVATION & CONCRETE

DRIVER DAILY TIMESHEET

No. 1028

DATE: _____ PRINT NAME: _____ EMPLOYEE #: _____

PRINT TRUCKING COMPANY: _____ TRUCK #: _____ LEASED TO: _____

JOB #: _____

START TIME	END TIME	LUNCH	HOURS	PHASE	ITEM #	TONS	TICKET #	MATERIAL

STRAIGHT TIME: _____ OVERTIME: _____ TOTAL HOURS: _____

DAILY MILEAGE START: _____ STOP: _____ FUEL/OIL: _____

DRIVER SIGNATURE: _____ SUPERVISOR SIGNATURE: _____

NOTE: WHEN HAULING BY THE TON, ATTACH COPY OF TICKETS. ALL TRAVEL TIME NEEDS TO BE INCLUDED IN THE TOTAL NUMBER OF HOURS. THE FIELD SUPERVISOR MUST SIGN THIS TICKET TO BE PAID.

White-Solid Finish Yellow: Trucking Company Pink: Driver

SOLID FINISH CONSTRUCTION, Inc. EXCAVATION & CONCRETE

DRIVER DAILY TIMESHEET

No. 1095

DATE: 11-21-19 PRINT NAME: Dan Stanley EMPLOYEE #: _____

PRINT TRUCKING COMPANY: SOLIDFINISH TRUCK #: 20 LEASED TO: _____

JOB #: _____ RYW LOCB STADIUM

START TIME	END TIME	LUNCH	HOURS	PHASE	ITEM #	TONS	TICKET #	MATERIAL
8:00	11:30						11	DIRT

STRAIGHT TIME: _____ OVERTIME: _____ TOTAL HOURS: _____

DAILY MILEAGE START: 112921 STOP: _____ FUEL/OIL: _____

DRIVER SIGNATURE: _____ SUPERVISOR SIGNATURE: _____

NOTE: WHEN HAULING BY THE TON, ATTACH COPY OF TICKETS. ALL TRAVEL TIME NEEDS TO BE INCLUDED IN THE TOTAL NUMBER OF HOURS. THE FIELD SUPERVISOR MUST SIGN THIS TICKET TO BE PAID.

White-Solid Finish Yellow: Trucking Company Pink: Driver

Hanson **Plant: 5791200**

11/21/2019 10:41:14AM In : **12:00:00AM**

Monon Stone Quarry
SOURCE 2409 Q# 022197
38 E. Quarry Rd. PH: (219)253-1012
Monon, IN 47959

Customer: 4952009 R & W CONTRACTING INC
Order : 183602 D579 - Loeb Stadium 2019-2020
Ship Ref:
Cust Ref: Loeb Stadium Lafayette In.
Product : 01653 INDIANA #8 AP CAPP
P.O. : 1915 Scott Street
Release ID:

Tkt. No. 1450074882

	UNIT	TOTALS
Material:		
Freight:		
Tax:		
Fee / Fuel:		
Other Chrg:	No	

	Pounds	Tons
Gross	66,680 *	33.34 *
Tare	29,320 *	14.66 *
Net	37,360 *	18.68 *

* Manual Weight 18.68 Ton

Today: 18.68 Loads: 1

Carrier : 9598387 J&J WILLIAMS TRUCKING LLC
Vehicle : 579JJ8 JJ WILLIAMS

By acceptance of this ticket (with or without signature), driver accepts on behalf of himself/his employer sole responsibility to ensure that the load received is within the weight limit authorized by law and shall hold seller harmless against any and all claims with respect to same

Received: _____ Cust: _____

Weighmaster: Worrell, Andy P/D Status: **Deliver**
Correction of 1450074881

Copy 3 Scale: 1

Hanson **Plant: 5791200**

11/21/2019 10:45:25AM In : **12:00:00AM**

Monon Stone Quarry
SOURCE 2409 Q# 022197
38 E. Quarry Rd. PH: (219)253-1012
Monon, IN 47959

Customer: 4952009 R & W CONTRACTING INC
Order : 183602 D579 - Loeb Stadium 2019-2020
Ship Ref:
Cust Ref: Loeb Stadium Lafayette In.
Product : 01653 INDIANA #8 AP CAPP
P.O. : 1915 Scott Street
Release ID:

Tkt. No. 1450074883

	UNIT	TOTALS
Material:		
Freight:		
Tax:		
Fee / Fuel:		
Other Chrg:	No	

	Pounds	Tons
Gross	71,400	35.70
Tare	27,640 *	13.82 *
Net	43,760	21.88

* P. T. 21.88 Ton

Today: 40.56 Loads: 2

Carrier : 9598387 J&J WILLIAMS TRUCKING LLC
Vehicle : 579JJ2 J & J WILLIAMS

By acceptance of this ticket (with or without signature), driver accepts on behalf of himself/his employer sole responsibility to ensure that the load received is within the weight limit authorized by law and shall hold seller harmless against any and all claims with respect to same

Received: _____ Cust: _____

Weighmaster: Worrell, Andy P/D Status: **Deliver**

Copy 3 Scale: 1

Hanson **Plant: 5791200**

Monon Stone Quarry
SOURCE 2409 Q# 022197
38 E. Quarry Rd. PH: (219)253-1012
Monon, IN 47959

11/21/2019 7:03:54AM In : **6:57:47AM**

Customer: 4952009 R & W CONTRACTING INC
Order : 183602 D579 - Loeb Stadium 2019-2020
Ship Ref:
Cust Ref: Loeb Stadium Lafayette In.
Product : 01801 INDIANA #53 CAPP
P.O. : 1915 Scott Street
Release ID:

Tkt. No. 1450074850

	UNIT	TOTALS
Material:		
Freight:		
Tax:		
Fee / Fuel:		
Other Chrg:	No	

	Pounds	Tons
Gross	72,100	36.05
Tare	29,460	14.73
Net	42,640	21.32

21.32 Ton

Today: 63.12 Loads: 3

Carrier : 9598387 J&J WILLIAMS TRUCKING LLC
Vehicle : 579JJ15 JJ WILLIAMS

By acceptance of this ticket (with or without signature), driver accepts on behalf of himself/his employer sole responsibility to ensure that the load received is within the weight limit authorized by law and shall hold seller harmless against any and all claims with respect to same

Received: _____ Cust: _____

Weighmaster: Worrell, Andy P/D Status: **Deliver** Copy 3 Scale: 1

Hanson **Plant: 5791200**

Monon Stone Quarry
SOURCE 2409 Q# 022197
38 E. Quarry Rd. PH: (219)253-1012
Monon, IN 47959

11/21/2019 7:05:22AM In : **6:58:26AM**

Customer: 4952009 R & W CONTRACTING INC
Order : 183602 D579 - Loeb Stadium 2019-2020
Ship Ref:
Cust Ref: Loeb Stadium Lafayette In.
Product : 01801 INDIANA #53 CAPP
P.O. : 1915 Scott Street
Release ID:

Tkt. No. 1450074851

	UNIT	TOTALS
Material:		
Freight:		
Tax:		
Fee / Fuel:		
Other Chrg:	No	

	Pounds	Tons
Gross	67,720	33.86
Tare	29,320	14.66
Net	38,400	19.20

19.20 Ton

Today: 82.32 Loads: 4

Carrier : 9598387 J&J WILLIAMS TRUCKING LLC
Vehicle : 579JJ8 JJ WILLIAMS

By acceptance of this ticket (with or without signature), driver accepts on behalf of himself/his employer sole responsibility to ensure that the load received is within the weight limit authorized by law and shall hold seller harmless against any and all claims with respect to same

Received: _____ Cust: _____

Weighmaster: Worrell, Andy P/D Status: **Deliver** Copy 3 Scale: 1

Hanson **Plant: 5791200**

Monon Stone Quarry
SOURCE 2409 Q# 022197
38 E. Quarry Rd. PH: (219)253-1012
Monon, IN 47959

11/21/2019 7:08:28AM In : **6:59:35AM**

Customer: 4952009 R & W CONTRACTING INC
Order : 183602 D579 - Loeb Stadium 2019-2020
Ship Ref:
Cust Ref: Loeb Stadium Lafayette In.
Product : 01801 INDIANA #53 CAPP
P.O. : 1915 Scott Street
Release ID:

Tkt. No. 1450074852

	UNIT	TOTALS
Material:		
Freight:		
Tax:		
Fee / Fuel:		
Other Chrg:	No	

	Pounds	Tons
Gross	66,700	33.35
Tare	27,560	13.78
Net	39,140	19.57

19.57 Ton

Today: 101.89 Loads: 5

Carrier : 9598387 J&J WILLIAMS TRUCKING LLC
Vehicle : 579JJ16 JJ WILLIAMS

By acceptance of this ticket (with or without signature), driver accepts on behalf of himself/his employer sole responsibility to ensure that the load received is within the weight limit authorized by law and shall hold seller harmless against any and all claims with respect to same

Received: _____ Cust: _____

Weighmaster: Worrell, Andy P/D Status: **Deliver** Copy 3 Scale: 1

Hanson **Plant: 5791200**

Monon Stone Quarry
SOURCE 2409 Q# 022197
38 E. Quarry Rd. PH: (219)253-1012
Monon, IN 47959

11/21/2019 7:09:56AM In : **7:00:12AM**

Customer: 4952009 R & W CONTRACTING INC
Order : 183602 D579 - Loeb Stadium 2019-2020
Ship Ref:
Cust Ref: Loeb Stadium Lafayette In.
Product : 01801 INDIANA #53 CAPP
P.O. : 1915 Scott Street
Release ID:

Tkt. No. 1450074853

	UNIT	TOTALS
Material:		
Freight:		
Tax:		
Fee / Fuel:		
Other Chrg:	No	

	Pounds	Tons
Gross	67,560	33.78
Tare	27,700	13.85
Net	39,860	19.93

19.93 Ton

Today: 121.82 Loads: 6

Carrier : 9598387 J&J WILLIAMS TRUCKING LLC
Vehicle : 579JJ11 579JJ11

By acceptance of this ticket (with or without signature), driver accepts on behalf of himself/his employer sole responsibility to ensure that the load received is within the weight limit authorized by law and shall hold seller harmless against any and all claims with respect to same

Received: _____ Cust: _____

Weighmaster: Worrell, Andy P/D Status: **Deliver** Copy 3 Scale: 1

Request for Change - Loeb Stadium

To: 11/22/2019
Rob Mutzl
JR Kelly Company

From:
R&W Contracting, Inc.
3131 Klondike Road
West Lafayette, IN 47906
765-499-9390

Undercut Main Street Subgrade 8" - Replaced with #53 Stone

Description	Rate	Quantity		Total
Linkbelt 290	200	4	HR	800
Case 1150G	110	4	HR	440
GPS Guidance	75	4	HR	300
Gehl CTL 75	65	3	HR	195
IR-SD 70 Compactor	75	4	HR	300
Triaxle Dump Truck with Driver (R&W)	100	0	HR	-
Subcontracted Dump Truck With Driver	98	30	HR	2,940
Superintendent	70	5	HR	350
Operator	60	15	HR	900
Laborer	50	4	HR	200
Dump Fees	50	23	EA	1,150
#53 Stone (Delivered)	14.25	320	TN	4,560
#53 Stone (Picked Up)	7	200	TN	1,400
Subtotal			$	13,535
P&OH (10%)			$	1,354
Total			**$**	**14,889**

R & W CONTRACTING, INC.
3131 Klondike Rd.
W. Lafayette, IN 47906-5213
Phone (765) 463-1174
Fax (765) 497-7782

Time & Material Report

Date: 11/22/2019
Job #: Cobb Stadium
Supervisors Name: Cody Sondgeroth

Description of Work Performed: refill compacted 53's — Cut Main ST 8" Below sub grade

Personnel: Operators, Truck, Labor

Material: (Attach shipping list or invoice):

HOURS:		RATE	EXTENSION
	EXCAVATOR:		
4	Linkbelt 4300Q	$200	
	Linkbelt 290	$200	
	Komatsu PC 200 LC-6	$150	
	Komatsu PC 138	$100	
	Komatsu PC 78	$75	
	Takehuci TB 145	$50	
	BULLDOZERS		
	Case 1450B	$110	
4	Case 1150G	$110	
	Case 850B	$75	
4	GPS Guidance	$75	
	BACKHOES & SKIDLOADERS		
	Fermac	$50	
3	Gehl CTL 75	$65	
	Gehl CTL 70	$65	
	COMPACTORS		
4	IR-SD 70	$75	
	IR-SPF 48	$60	
	Large Plate compactor	$25	
	Small Plate Compactor	$15	
	OTHER EQUIPMENT:		
	Service Truck	$50	
	Tri-axle dump truck wil Driver	$100	
33	Other: Solid Earth Trucks		
	LABOR		
5	Field Superintendent	$70	
15	Operator	$60	
4	Laborer	$50	
	Traffic Control	$35	

Field Superintendent signiture:
(sign and return copy to GC and R&W Contracting office)

DRIVER DAILY TIMESHEET

No. 1037

DATE: _____ PRINT NAME: _____ EMPLOYEE #: _____

PRINT TRUCKING COMPANY: _____ TRUCK #: _____ LEASED TO: _____

JOB #: _____

START TIME	END TIME	LUNCH	HOURS	PHASE	ITEM #	TONS	TICKET #	MATERIAL

STRAIGHT TIME: _____ OVERTIME: _____ TOTAL HOURS: _____

DAILY MILEAGE START: _____ STOP: _____ FUEL/OIL: _____

DRIVER SIGNATURE: _____ SUPERVISOR SIGNATURE: _____

NOTE: WHEN HAULING BY THE TON, ATTACH COPY OF TICKETS. ALL TRAVEL TIME NEEDS TO BE INCLUDED IN THE TOTAL NUMBER OF HOURS. THE FIELD SUPERVISOR MUST SIGN THIS TICKET TO BE PAID.

White-Solid Finish Yellow: Trucking Company Pink: Driver

SOLID FINISH CONSTRUCTION, Inc. EXCAVATION & CONCRETE

DRIVER DAILY TIMESHEET

No. 1096

DATE: 11-22-19 PRINT NAME: Dan Stanley EMPLOYEE #: _____

PRINT TRUCKING COMPANY: Solid Finish TRUCK #: 70 LEASED TO: _____

JOB #: _____ RTW 8/DCB Stadium

START TIME	END TIME	LUNCH	HOURS	PHASE	ITEM #	TONS	TICKET #	MATERIAL
8:00	4:30	—	8½				111	Dirt
					#8		111	

STRAIGHT TIME: _____ OVERTIME: _____ TOTAL HOURS: _____

DAILY MILEAGE START: 118265 STOP: _____ FUEL/OIL: _____

DRIVER SIGNATURE: _____ SUPERVISOR SIGNATURE: _____

NOTE: WHEN HAULING BY THE TON, ATTACH COPY OF TICKETS. ALL TRAVEL TIME NEEDS TO BE INCLUDED IN THE TOTAL NUMBER OF HOURS. THE FIELD SUPERVISOR MUST SIGN THIS TICKET TO BE PAID.

White-Solid Finish Yellow: Trucking Company Pink: Driver

SOLID FINISH CONSTRUCTION, Inc EXCAVATION & CONCRETE

DRIVER DAILY TIMESHEET

No. 1106

DATE: 11-21-19 PRINT NAME: Kenneth A. Harkins EMPLOYEE #: _____

PRINT TRUCKING COMPANY: Solid Finish TRUCK #: 72 LEASED TO: R[illegible]

JOB #: _____ Loeb Stadium - Lafayette

START TIME	END TIME	LUNCH	HOURS	PHASE	ITEM #	TONS	TICKET #	MATERIAL
8:00 AM	10 00	N/L		Bernells Pt	1		DIRT	[illegible]

STRAIGHT TIME: _____ OVERTIME: _____ TOTAL HOURS: _____

DAILY MILEAGE START: _____ STOP: _____ FUEL/OIL: _____

DRIVER SIGNATURE: _____ SUPERVISOR SIGNATURE: _____

NOTE: WHEN HAULING BY THE TON, ATTACH COPY OF TICKETS. ALL TRAVEL TIME NEEDS TO BE INCLUDED IN THE TOTAL NUMBER OF HOURS. THE FIELD SUPERVISOR MUST SIGN THIS TICKET TO BE PAID.

White-Solid Finish Yellow: Trucking Company Pink: Driver

SOLID FINISH CONSTRUCTION, Inc. EXCAVATION & CONCRETE

DRIVER DAILY TIMESHEET

No. 1107

DATE: 11 [illegible] PRINT NAME: [illegible] EMPLOYEE #: _____

PRINT TRUCKING COMPANY: [illegible] TRUCK #: [illegible] LEASED TO: [illegible]

JOB #: _____ [illegible]

START TIME	END TIME	LUNCH	HOURS	PHASE	ITEM #	TONS	TICKET #	MATERIAL
[illegible]	4:00PM			[illegible]	1111		[illegible]	[illegible]
							11	[illegible]

STRAIGHT TIME: _____ OVERTIME: _____ TOTAL HOURS: _____

DAILY MILEAGE START: _____ STOP: _____ FUEL/OIL: _____

DRIVER SIGNATURE: _____ SUPERVISOR SIGNATURE: _____

NOTE: WHEN HAULING BY THE TON, ATTACH COPY OF TICKETS. ALL TRAVEL TIME NEEDS TO BE INCLUDED IN THE TOTAL NUMBER OF HOURS. THE FIELD SUPERVISOR MUST SIGN THIS TICKET TO BE PAID.

White-Solid Finish Yellow: Trucking Company Pink: Driver

Solid Finish Construction, Inc.
4666 East 1175 South
Galveston, IN 46932
574-699-7249

NO. 0874

TIME & MATERIAL DAILY LOG

PROJECT NAME: _____ JOB No: _____

CONTRACTOR: _____

LABOR USED			
DATE	TECHNICIAN NAME	REG. HOURS	OT HOURS

DESCRIPTION OF WORK (Include location(s) of work)

MATERIAL USED	QUANTITY

EQUIPMENT USED	QUANTITY

Contractors Representative: X

Print Name:

Date:

The above work and material has been received and inspected and is accepted as satisfactory and subject to terms and conditions listed below. Terms & Conditions: All invoices net, due & payable immediately upon presentation, unless special arrangements made and approved by our credit department. Maximum legal rate of interest will be charged on all accounts after due date, and, in event collection is necessary, reasonable attorney's fees will be added. Sales tax will be charged wherever applicable.

Hanson **Plant: 5791200**

11/22/2019 7:09:52AM In: **7:03:51AM**

Monon Stone Quarry
SOURCE 2409 Q# 022197
38 E. Quarry Rd. PH: (219)253-1012
Monon, IN 47959

Customer: 4952009 R & W CONTRACTING INC
Order: 183602 D579 - Loeb Stadium 2019-2020
Ship Ref:
Cust Ref: Loeb Stadium Lafayette In.
Product: 01801 INDIANA #53 CAPP
P.O.: 1915 Scott Street
Release ID:

Tkt. No. 1450074934

	UNIT	TOTALS
Material:		
Freight:		
Tax:		
Fee / Fuel:		
Other Chrg:	No	

	Pounds	Tons
Gross	71,940	35.97
Tare	27,900	13.95
Net	44,040	22.02

22.02 Ton

Today: 22.02 Loads: 1

Carrier: 9598387 J&J WILLIAMS TRUCKING LLC
Vehicle: 579JLD34 579JLD34

By acceptance of this ticket (with or without signature), driver accepts on behalf of himself/his employer sole responsibility to ensure that the load received is within the weight limit authorized by law and shall hold seller harmless against any and all claims with respect to same

Received: _____ Cust: _____

Weighmaster: Worrell, Andy P/D Status: **Deliver** Copy 3 Scale: 1

Hanson **Plant: 5791200**

11/22/2019 7:11:31AM In: **12:00:00AM**

Monon Stone Quarry
SOURCE 2409 Q# 022197
38 E. Quarry Rd. PH: (219)253-1012
Monon, IN 47959

Customer: 4952009 R & W CONTRACTING INC
Order: 183602 D579 - Loeb Stadium 2019-2020
Ship Ref:
Cust Ref: Loeb Stadium Lafayette In.
Product: 01801 INDIANA #53 CAPP
P.O.: 1915 Scott Street
Release ID:

Tkt. No. 1450074935

	UNIT	TOTALS
Material:		
Freight:		
Tax:		
Fee / Fuel:		
Other Chrg:	No	

	Pounds	Tons
Gross	67,180	33.59
Tare	26,380 *	13.19 *
Net	40,800	20.40

* P. T. 20.40 Ton

Today: 42.42 Loads: 2

Carrier: 9598387 J&J WILLIAMS TRUCKING LLC
Vehicle: 579JLD73 J L D TRUCKING

By acceptance of this ticket (with or without signature), driver accepts on behalf of himself/his employer sole responsibility to ensure that the load received is within the weight limit authorized by law and shall hold seller harmless against any and all claims with respect to same

Received: _____ Cust: _____

Weighmaster: Worrell, Andy P/D Status: **Deliver** Copy 3 Scale: 1

Hanson

Plant: 5791200

Monon Stone Quarry
SOURCE 2409 Q# 022197
38 E. Quarry Rd. PH: (219)253-1012
Monon, IN 47959

11/22/2019 7:12:10AM In: **7:05:42AM**
Customer: 4952009 R & W CONTRACTING INC
Order: 183602 D579 - Loeb Stadium 2019-2020
Ship Ref:
Cust Ref: Loeb Stadium Lafayette In.
Product: 01801 INDIANA #53 CAPP
P.O.: 1915 Scott Street
Release ID:

Tkt. No. 1450074936

	UNIT	TOTALS
Material:		
Freight:		
Tax:		
Fee / Fuel:		
Other Chrg:	No	

	Pounds	Tons
Gross	66,660	33.33
Tare	25,380	12.69
Net	41,280	20.64

20.64 Ton

Today: 63.06 Loads: 3

Carrier: 9598387 J&J WILLIAMS TRUCKING LLC
Vehicle: 579JLD70 J L D TRUCKING

By acceptance of this ticket (with or without signature), driver accepts on behalf of himself/his employer sole responsibility to ensure that the load received is within the weight limit authorized by law and shall hold seller harmless against any and all claims with respect to same

Received: _____ Cust: _____

Weighmaster: Worrell, Andy P/D Status: **Deliver**

Copy 1 Scale: 1

Hanson

Plant: 5791200

Monon Stone Quarry
SOURCE 2409 Q# 022197
38 E. Quarry Rd. PH: (219)253-1012
Monon, IN 47959

11/22/2019 7:13:27AM In: **7:06:31AM**
Customer: 4952009 R & W CONTRACTING INC
Order: 183602 D579 - Loeb Stadium 2019-2020
Ship Ref:
Cust Ref: Loeb Stadium Lafayette In.
Product: 01801 INDIANA #53 CAPP
P.O.: 1915 Scott Street
Release ID:

Tkt. No. 1450074937

	UNIT	TOTALS
Material:		
Freight:		
Tax:		
Fee / Fuel:		
Other Chrg:	No	

	Pounds	Tons
Gross	66,300	33.15
Tare	25,580	12.79
Net	40,720	20.36

20.36 Ton

Today: 83.42 Loads: 4

Carrier: 9598387 J&J WILLIAMS TRUCKING LLC
Vehicle: 579JLD78 JLD TRUCKING

By acceptance of this ticket (with or without signature), driver accepts on behalf of himself/his employer sole responsibility to ensure that the load received is within the weight limit authorized by law and shall hold seller harmless against any and all claims with respect to same

Received: _____ Cust: _____

Weighmaster: Worrell, Andy P/D Status: **Deliver**

Copy 3 Scale: 1

Hanson

Plant: 5791200

Monon Stone Quarry
SOURCE 2409 Q# 022197
38 E. Quarry Rd. PH: (219)253-1012
Monon, IN 47959

11/22/2019 7:14:47AM In : 7:07:15AM
Customer: 4952009 R & W CONTRACTING INC
Order : 183602 D579 - Loeb Stadium 2019-2020
Ship Ref:
Cust Ref: Loeb Stadium Lafayette In.
Product : 01801 INDIANA #53 CAPP
P.O. : 1915 Scott Street
Release ID:

Tkt. No. 1450074938

	UNIT	TOTALS
Material:		
Freight:		
Tax:		
Fee / Fuel:		
Other Chrg:	No	

	Pounds	Tons
Gross	68,540	34.27
Tare	28,100	14.05
Net	40,440	20.22

20.22 Ton

Today: 103.64 Loads: 5

Carrier : 9598387 J&J WILLIAMS TRUCKING LLC
Vehicle : 579JLD48 579JLD48

By acceptance of this ticket (with or without signature), driver accepts on behalf of himself/his employer sole responsibility to ensure that the load received is within the weight limit authorized by law and shall hold seller harmless against any and all claims with respect to same

Received: _____ Cust: _____

Weighmaster: Worrell, Andy P/D Status: **Deliver**

Copy 1 Scale: 1

Hanson

Plant: 5791200

Monon Stone Quarry
SOURCE 2409 Q# 022197
38 E. Quarry Rd. PH: (219)253-1012
Monon, IN 47959

11/22/2019 7:17:48AM In : 7:07:55AM
Customer: 4952009 R & W CONTRACTING INC
Order : 183602 D579 - Loeb Stadium 2019-2020
Ship Ref:
Cust Ref: Loeb Stadium Lafayette In.
Product : 01801 INDIANA #53 CAPP
P.O. : 1915 Scott Street
Release ID:

Tkt. No. 1450074939

	UNIT	TOTALS
Material:		
Freight:		
Tax:		
Fee / Fuel:		
Other Chrg:	No	

	Pounds	Tons
Gross	67,500	33.75
Tare	26,640	13.32
Net	40,860	20.43

20.43 Ton

Today: 124.07 Loads: 6

Carrier : 9598387 J&J WILLIAMS TRUCKING LLC
Vehicle : 579JLD55 JLD

By acceptance of this ticket (with or without signature), driver accepts on behalf of himself/his employer sole responsibility to ensure that the load received is within the weight limit authorized by law and shall hold seller harmless against any and all claims with respect to same

Received: _____ Cust: _____

Weighmaster: Worrell, Andy P/D Status: **Deliver**

Copy 1 Scale: 1

Hanson

Plant: 5791200

Monon Stone Quarry
SOURCE 2409 Q# 022197
38 E. Quarry Rd. PH: (219)253-1012
Monon, IN 47959

11/22/2019 7:20:52AM In: **7:04:38AM**
Customer: 4952009 R & W CONTRACTING INC
Order: 183602 D579 - Loeb Stadium 2019-2020
Ship Ref:
Cust Ref: Loeb Stadium Lafayette In.
Product: 01801 INDIANA #53 CAPP
P.O.: 1915 Scott Street
Release ID:

Tkt. No. 1450074940

UNIT	TOTALS
Material:	
Freight:	
Tax:	
Fee / Fuel:	
Other Chrg: No	

	Pounds	Tons
Gross	65,620	32.81
Tare	26,060	13.03
Net	39,560	19.78

19.78 Ton

Today: 143.85 Loads: 7

Carrier: 9598387 J&J WILLIAMS TRUCKING LLC
Vehicle: 579JLD72 JLD TRUCKING

By acceptance of this ticket (with or without signature), driver accepts on behalf of himself/his employer sole responsibility to ensure that the load received is within the weight limit authorized by law and shall hold seller harmless against any and all claims with respect to same

Received: _____ Cust: _____

Weighmaster: Worrell, Andy P/D Status: **Deliver**

Copy 1 Scale: 1

Hanson

Plant:5791200

Monon Stone Quarry
SOURCE 2409 Q# 022197
38 E. Quarry Rd. PH: (219)253-1012
Monon, IN 47959

11/22/2019 8:13:54AM In: **12:00:00AM**
Customer: 4952009 R & W CONTRACTING INC
Order: 183602 D579 - Loeb Stadium 2019-2020
Ship Ref:
Cust Ref: Loeb Stadium Lafayette In.
Product: 01801 INDIANA #53 CAPP
P.O.: 1915 Scott Street
Release ID:

Tkt. No. 1450074956

UNIT	TOTALS
Material:	
Freight:	
Tax:	
Fee / Fuel:	
Other Chrg: No	

	Pounds	Tons
Gross	72,800	36.40
Tare	28,760 *	14.38 *
Net	44,040	22.02

* P. T. 22.02 Ton

Today: 165.87 Loads: 8

Carrier: 9598387 J&J WILLIAMS TRUCKING LLC
Vehicle: 579JJ5 JJ WILLIAMS

By acceptance of this ticket (with or without signature), driver accepts on behalf of himself/his employer sole responsibility to ensure that the load received is within the weight limit authorized by law and shall hold seller harmless against any and all claims with respect to same

Received: _____ Cust: _____

Weighmaster: Worrell, Andy P/D Status: **Deliver**

Copy 2 Scale: 1

Hanson

Plant: 5791200

Monon Stone Quarry
SOURCE 2409 Q# 022197
38 E. Quarry Rd. PH: (219)253-1012
Monon, IN 47959

11/22/2019 9:08:06AM In : **12:00:00AM**
Customer: 4952009 R & W CONTRACTING INC
Order : 183602 D579 - Loeb Stadium 2019-2020
Ship Ref:
Cust Ref: Loeb Stadium Lafayette In.
Product : 01801 INDIANA #53 CAPP
P.O. : 1915 Scott Street
Release ID:

Tkt. No. 1450074967

	UNIT	TOTALS
Material:		
Freight:		
Tax:		
Fee / Fuel:		
Other Chrg:	No	

	Pounds	Tons
Gross	72,860	36.43
Tare	27,900 *	13.95 *
Net	44,960	22.48

* P. T. 22.48 Ton

Today: 188.35 Loads: 9

Carrier : 9598387 J&J WILLIAMS TRUCKING LLC
Vehicle : 579JLD34 579JLD34

By acceptance of this ticket (with or without signature), driver accepts on behalf of himself/his employer sole responsibility to ensure that the load received is within the weight limit authorized by law and shall hold seller harmless against any and all claims with respect to same

Received:_____ Cust: _____

Weighmaster: Worrell, Andy P/D Status: **Deliver**

Copy 1 Scale: 1

Hanson

Plant: 5791200

Monon Stone Quarry
SOURCE 2409 Q# 022197
38 E. Quarry Rd. PH: (219)253-1012
Monon, IN 47959

11/22/2019 9:15:22AM In : **12:00:00AM**
Customer: 4952009 R & W CONTRACTING INC
Order : 183602 D579 - Loeb Stadium 2019-2020
Ship Ref:
Cust Ref: Loeb Stadium Lafayette In.
Product : 01801 INDIANA #53 CAPP
P.O. : 1915 Scott Street
Release ID:

Tkt. No. 1450074969

	UNIT	TOTALS
Material:		
Freight:		
Tax:		
Fee / Fuel:		
Other Chrg:	No	

	Pounds	Tons
Gross	67,900	33.95
Tare	28,100 *	14.05 *
Net	39,800	19.90

* P. T. 19.90 Ton

Today: 208.25 Loads: 10

Carrier : 9598387 J&J WILLIAMS TRUCKING LLC
Vehicle : 579JLD48 579JLD48

By acceptance of this ticket (with or without signature), driver accepts on behalf of himself/his employer sole responsibility to ensure that the load received is within the weight limit authorized by law and shall hold seller harmless against any and all claims with respect to same

Received:_____ Cust: _____

Weighmaster: Worrell, Andy P/D Status: **Deliver**

Copy 1 Scale: 1

Hanson **Plant: 5791200**

11/22/2019 9:28:20AM In : **12:00:00AM**

Monon Stone Quarry
SOURCE 2409 Q# 022197
38 E. Quarry Rd. PH: (219)253-1012
Monon, IN 47959

Customer: 4952009 R & W CONTRACTING INC
Order : 183602 D579 - Loeb Stadium 2019-2020
Ship Ref:
Cust Ref: Loeb Stadium Lafayette In.
Product : 01801 INDIANA #53 CAPP
P.O. : 1915 Scott Street
Release ID:

Tkt. No. 1450074974

	UNIT	TOTALS
Material:		
Freight:		
Tax:		
Fee / Fuel:		
Other Chrg:	No	

	Pounds	Tons
Gross	66,980	33.49
Tare	26,640 *	13.32 *
Net	40,340	20.17

* P. T. 20.17 Ton

Today: 228.42 Loads: 11

Carrier : 9598387 J&J WILLIAMS TRUCKING LLC
Vehicle : 579JLD55 JLD

By acceptance of this ticket (with or without signature), driver accepts on behalf of himself/his employer sole responsibility to ensure that the load received is within the weight limit authorized by law and shall hold seller harmless against any and all claims with respect to same

Received: _____ Cust: _____

Weighmaster: Worrell, Andy P/D Status: **Deliver** Copy 3 Scale: 1

Hanson **Plant: 5791200**

11/22/2019 9:29:45AM In : **12:00:00AM**

Monon Stone Quarry
SOURCE 2409 Q# 022197
38 E. Quarry Rd. PH: (219)253-1012
Monon, IN 47959

Customer: 4952009 R & W CONTRACTING INC
Order : 183602 D579 - Loeb Stadium 2019-2020
Ship Ref:
Cust Ref: Loeb Stadium Lafayette In.
Product : 01801 INDIANA #53 CAPP
P.O. : 1915 Scott Street
Release ID:

Tkt. No. 1450074975

	UNIT	TOTALS
Material:		
Freight:		
Tax:		
Fee / Fuel:		
Other Chrg:	No	

	Pounds	Tons
Gross	67,620	33.81
Tare	26,380 *	13.19 *
Net	41,240	20.62

* P. T. 20.62 Ton

Today: 249.04 Loads: 12

Carrier : 9598387 J&J WILLIAMS TRUCKING LLC
Vehicle : 579JLD73 J L D TRUCKING

By acceptance of this ticket (with or without signature), driver accepts on behalf of himself/his employer sole responsibility to ensure that the load received is within the weight limit authorized by law and shall hold seller harmless against any and all claims with respect to same

Received: _____ Cust: _____

Weighmaster: Worrell, Andy P/D Status: **Deliver** Copy 3 Scale: 1

Hanson

Plant: 5791200

Monon Stone Quarry
SOURCE 2409 Q# 022197
38 E. Quarry Rd. PH: (219)253-1012
Monon, IN 47959

11/22/2019 9:30:43AM In : **12:00:00AM**

Customer: 4952009 R & W CONTRACTING INC
Order : 183602 D579 - Loeb Stadium 2019-2020
Ship Ref:
Cust Ref: Loeb Stadium Lafayette In.
Product : 01801 INDIANA #53 CAPP
P.O. : 1915 Scott Street
Release ID:

Tkt. No. 1450074976

	UNIT	TOTALS
Material:		
Freight:		
Tax:		
Fee / Fuel:		
Other Chrg:	No	

	Pounds	Tons
Gross	65,660	32.83
Tare	25,380 *	12.69 *
Net	40,280	20.14

* P. T. **20.14** Ton

Today: 269.18 Loads: 13

Carrier : 9598387 J&J WILLIAMS TRUCKING LLC
Vehicle : 579JLD70 J L D TRUCKING

By acceptance of this ticket (with or without signature), driver accepts on behalf of himself/his employer sole responsibility to ensure that the load received is within the weight limit authorized by law and shall hold seller harmless against any and all claims with respect to same

Received: _____ Cust: _____

Weighmaster: Worrell, Andy P/D Status: **Deliver** Copy 3 Scale: 1

Hanson

Plant:5791200

Monon Stone Quarry
SOURCE 2409 Q# 022197
38 E. Quarry Rd. PH: (219)253-1012
Monon, IN 47959

11/22/2019 9:49:57AM In : **12:00:00AM**

Customer: 4952009 R & W CONTRACTING INC
Order : 183602 D579 - Loeb Stadium 2019-2020
Ship Ref:
Cust Ref: Loeb Stadium Lafayette In.
Product : 01801 INDIANA #53 CAPP
P.O. : 1915 Scott Street
Release ID:

Tkt. No. 1450074984

	UNIT	TOTALS
Material:		
Freight:		
Tax:		
Fee / Fuel:		
Other Chrg:	No	

	Pounds	Tons
Gross	72,040	36.02
Tare	28,760 *	14.38 *
Net	43,280	21.64

* P. T. **21.64** Ton

Today: 290.82 Loads: 14

Carrier : 9598387 J&J WILLIAMS TRUCKING LLC
Vehicle : 579JJ5 JJ WILLIAMS

By acceptance of this ticket (with or without signature), driver accepts on behalf of himself/his employer sole responsibility to ensure that the load received is within the weight limit authorized by law and shall hold seller harmless against any and all claims with respect to same

Received: _____ Cust: _____

Weighmaster: Worrell, Andy P/D Status: **Deliver** Copy 2 Scale: 1

Hanson **Plant: 5791200**

11/22/2019 9:51:13AM In : **12:00:00AM**

Monon Stone Quarry
SOURCE 2409 Q# 022197
38 E. Quarry Rd. PH: (219)253-1012
Monon, IN 47959

Customer: 4952009 R & W CONTRACTING INC
Order : 183602 D579 - Loeb Stadium 2019-2020
Ship Ref:
Cust Ref: Loeb Stadium Lafayette In.
Product : 01801 INDIANA #53 CAPP
P.O. : 1915 Scott Street
Release ID:

Tkt. No. 1450074985

	UNIT	TOTALS
Material:		
Freight:		
Tax:		
Fee / Fuel:		
Other Chrg:	No	

	Pounds	Tons
Gross	65,620	32.81
Tare	25,580 *	12.79 *
Net	40,040	20.02

* P. T. **20.02** Ton

Today: 310.84 Loads: 15

Carrier : 9598387 J&J WILLIAMS TRUCKING LLC
Vehicle : 579JLD78 JLD TRUCKING

By acceptance of this ticket (with or without signature), driver accepts on behalf of himself/his employer sole responsibility to ensure that the load received is within the weight limit authorized by law and shall hold seller harmless against any and all claims with respect to same

Received: _____ Cust: _____

Weighmaster: Worrell, Andy P/D Status: **Deliver**

Copy 3 Scale: 1

Hanson **Plant: 5791200**

11/22/2019 10:56:20AM In : **12:00:00AM**

Monon Stone Quarry
SOURCE 2409 Q# 022197
38 E. Quarry Rd. PH: (219)253-1012
Monon, IN 47959

Customer: 4952009 R & W CONTRACTING INC
Order : 183602 D579 - Loeb Stadium 2019-2020
Ship Ref:
Cust Ref: Loeb Stadium Lafayette In.
Product : 01801 INDIANA #53 CAPP
P.O. : 1915 Scott Street
Release ID:

Tkt. No. 1450075001

	UNIT	TOTALS
Material:		
Freight:		
Tax:		
Fee / Fuel:		
Other Chrg:	No	

	Pounds	Tons
Gross	68,820	34.41
Tare	27,900 *	13.95 *
Net	40,920	20.46

* P. T. **20.46** Ton

Today: 331.30 Loads: 16

Carrier : 9598387 J&J WILLIAMS TRUCKING LLC
Vehicle : 579JLD34 579JLD34

By acceptance of this ticket (with or without signature), driver accepts on behalf of himself/his employer sole responsibility to ensure that the load received is within the weight limit authorized by law and shall hold seller harmless against any and all claims with respect to same

Received: _____ Cust: _____

Weighmaster: Worrell, Andy P/D Status: **Deliver**

Copy 3 Scale: 1

Hanson **Plant: 5791200**

11/22/2019 1:00:49PM In : **12:51:19PM**

Monon Stone Quarry
SOURCE 2409 Q# 022197
38 E. Quarry Rd. PH: (219)253-1012
Monon, IN 47959

Customer: 4952009 R & W CONTRACTING INC
Order : 186296 P579 - Loeb Stadium (2019-2020)
Ship Ref:
Cust Ref: Loeb Stadium Lafayette In.
Product : 01801 INDIANA #53 CAPP
P.O. :
Release ID:

Tkt. No. 1450075038

	UNIT	TOTALS
Material:		
Freight:		
Tax:		
Fee / Fuel:		
Other Chrg:	No	

	Pounds	Tons
Gross	66,760	33.38
Tare	28,500	14.25
Net	38,260	19.13

19.13 Ton

Today: 19.13 Loads: 1

By acceptance of this ticket (with or without signature), driver accepts on behalf of himself/his employer sole responsibility to ensure that the load received is within the weight limit authorized by law and shall hold seller harmless against any and all claims with respect to same

Carrier :
Vehicle : 579SOL72 SOLID FINISH

Received: _____ Cust: _____

Weighmaster: Worrell. Andy P/D Status: **Pickup**

Copy 3 Scale: 1

Hanson **Plant: 5791200**

11/22/2019 1:04:10PM In : **12:56:35PM**

Monon Stone Quarry
SOURCE 2409 Q# 022197
38 E. Quarry Rd. PH: (219)253-1012
Monon, IN 47959

Customer: 4952009 R & W CONTRACTING INC
Order : 186296 P579 - Loeb Stadium (2019-2020)
Ship Ref:
Cust Ref: Loeb Stadium Lafayette In.
Product : 01801 INDIANA #53 CAPP
P.O. :
Release ID:

Tkt. No. 1450075040

	UNIT	TOTALS
Material:		
Freight:		
Tax:		
Fee / Fuel:		
Other Chrg:	No	

	Pounds	Tons
Gross	66,600	33.30
Tare	28,720	14.36
Net	37,880	18.94

18.94 Ton

Today: 38.07 Loads: 2

By acceptance of this ticket (with or without signature), driver accepts on behalf of himself/his employer sole responsibility to ensure that the load received is within the weight limit authorized by law and shall hold seller harmless against any and all claims with respect to same

Carrier :
Vehicle : 579SOL73 SOLID FINISH

Received: _____ Cust: _____

Weighmaster: Worrell. Andy P/D Status: **Pickup**

Copy 3 Scale: 1

Hanson

Plant:5791200

Monon Stone Quarry
SOURCE 2409 Q# 022197
38 E. Quarry Rd. PH: (219)253-1012
Monon, IN 47959

11/22/2019 1:32:22PM In : **1:26:12PM**
Customer: 4952009 R & W CONTRACTING INC
Order : 186296 P579 - Loeb Stadium (2019-2020)
Ship Ref:
Cust Ref: Loeb Stadium Lafayette In.
Product : 01801 INDIANA #53 CAPP
P.O. :
Release ID:

Tkt. No. 1450075051

	UNIT	TOTALS
Material:		
Freight:		
Tax:		
Fee / Fuel:		
Other Chrg:	No	

	Pounds	Tons
Gross	66,540	33.27
Tare	28,920	14.46
Net	37,620	18.81

18.81 Ton

Today: 56.88 Loads: 3

By acceptance of this ticket (with or without signature), driver accepts on behalf of himself/his employer sole responsibility to ensure that the load received is within the weight limit authorized by law and shall hold seller harmless against any and all claims with respect to same

Carrier :
Vehicle : 579SOL75 SOLID FINISH

Received:_____ Cust: _____

Weighmaster: Worrell, Andy P/D Status: **Pickup** Copy 2 Scale: 1

Hanson

Plant:5791200

Monon Stone Quarry
SOURCE 2409 Q# 022197
38 E. Quarry Rd. PH: (219)253-1012
Monon, IN 47959

11/22/2019 1:33:46PM In : **12:00:00AM**
Customer: 4952009 R & W CONTRACTING INC
Order : 186296 P579 - Loeb Stadium (2019-2020)
Ship Ref:
Cust Ref: Loeb Stadium Lafayette In.
Product : 01801 INDIANA #53 CAPP
P.O. :
Release ID:

Tkt. No. 1450075052

	UNIT	TOTALS
Material:		
Freight:		
Tax:		
Fee / Fuel:		
Other Chrg:	No	

	Pounds	Tons
Gross	65,620	32.81
Tare	28,880 *	14.44 *
Net	36,740	18.37

* P. T. **18.37** Ton

Today: 75.25 Loads: 4

By acceptance of this ticket (with or without signature), driver accepts on behalf of himself/his employer sole responsibility to ensure that the load received is within the weight limit authorized by law and shall hold seller harmless against any and all claims with respect to same

Carrier :
Vehicle : 579SOL70 SOLID FINISH

Received:_____ Cust: _____

Weighmaster: Worrell, Andy P/D Status: **Pickup** Copy 2 Scale: 1

Hanson

Plant: 5791200

Monon Stone Quarry
SOURCE 2409 Q# 022197
38 E. Quarry Rd. PH: (219)253-1012
Monon, IN 47959

11/22/2019 2:39:13PM In : **12:00:00AM**
Customer: 4952009 R & W CONTRACTING INC
Order : 186296 P579 - Loeb Stadium (2019-2020)
Ship Ref:
Cust Ref: Loeb Stadium Lafayette In.
Product : 01801 INDIANA #53 CAPP
P.O. :
Release ID:

Tkt. No. 1450075065

	UNIT	TOTALS
Material:		
Freight:		
Tax:		
Fee / Fuel:		
Other Chrg:	No	

	Pounds	Tons
Gross	72,560	36.28
Tare	28,540 *	14.27 *
Net	44,020	22.01

* P. T. **22.01** Ton

Today: 97.26 Loads: 5

By acceptance of this ticket (with or without signature), driver accepts on behalf of himself/his employer sole responsibility to ensure that the load received is within the weight limit authorized by law and shall hold seller harmless against any and all claims with respect to same

Carrier :
Vehicle : 579RNW07 R&W

Received:_____ Cust: _____

Weighmaster: Worrell, Andy P/D Status: **Pickup**

Copy 1 Scale: 1

Hanson

Plant:5791200

Monon Stone Quarry
SOURCE 2409 Q# 022197
38 E. Quarry Rd. PH: (219)253-1012
Monon, IN 47959

11/22/2019 2:45:51PM In : **12:00:00AM**
Customer: 4952009 R & W CONTRACTING INC
Order : 186296 P579 - Loeb Stadium (2019-2020)
Ship Ref:
Cust Ref: Loeb Stadium Lafayette In.
Product : 01801 INDIANA #53 CAPP
P.O. :
Release ID:

Tkt. No. 1450075067

	UNIT	TOTALS
Material:		
Freight:		
Tax:		
Fee / Fuel:		
Other Chrg:	No	

	Pounds	Tons
Gross	67,480 m	33.74 m
Tare	28,500 *	14.25 *
Net	38,980 m	19.49 m

m Manual Weight, * P.T. **19.49** Ton

Today: 116.75 Loads: 6

By acceptance of this ticket (with or without signature), driver accepts on behalf of himself/his employer sole responsibility to ensure that the load received is within the weight limit authorized by law and shall hold seller harmless against any and all claims with respect to same

Carrier :
Vehicle : 579SOL72 SOLID FINISH

Received:_____ Cust: _____

Weighmaster: Worrell, Andy P/D Status: **Pickup**

Copy 2 Scale: 1

Hanson **Plant: 5791200**

Monon Stone Quarry
SOURCE 2409 Q# 022197
38 E. Quarry Rd. PH: (219)253-1012
Monon, IN 47959

11/22/2019 2:52:10PM In: **12:00:00AM**

Customer: 4952009 R & W CONTRACTING INC
Order: 186296 P579 - Loeb Stadium (2019-2020)
Ship Ref:
Cust Ref: Loeb Stadium Lafayette In.
Product: 01801 INDIANA #53 CAPP
P.O.:
Release ID:

Tkt. No. 1450075069

	UNIT	TOTALS
Material:		
Freight:		
Tax:		
Fee / Fuel:		
Other Chrg:	No	

	Pounds	Tons
Gross	66,820	33.41
Tare	28,860 *	14.43 *
Net	37,960	18.98

* Manual P. T. **18.98** Ton

Today: 135.73 Loads: 7

By acceptance of this ticket (with or without signature), driver accepts on behalf of himself/his employer sole responsibility to ensure that the load received is within the weight limit authorized by law and shall hold seller harmless against any and all claims with respect to same

Carrier:
Vehicle: 579SOL78 SOLID FINISH

Received: _____ Cust: _____

Weighmaster: Worrell, Andy P/D Status: **Pickup**

Copy 3 Scale: 1

Hanson **Plant:5791200**

Monon Stone Quarry
SOURCE 2409 Q# 022197
38 E. Quarry Rd. PH: (219)253-1012
Monon, IN 47959

11/22/2019 3:19:42PM In: **12:00:00AM**

Customer: 4952009 R & W CONTRACTING INC
Order: 186296 P579 - Loeb Stadium (2019-2020)
Ship Ref:
Cust Ref: Loeb Stadium Lafayette In.
Product: 01801 INDIANA #53 CAPP
P.O.:
Release ID:

Tkt. No. 1450075077

	UNIT	TOTALS
Material:		
Freight:		
Tax:		
Fee / Fuel:		
Other Chrg:	No	

	Pounds	Tons
Gross	67,140	33.57
Tare	28,920 *	14.46 *
Net	38,220	19.11

* P. T. **19.11** Ton

Today: 154.84 Loads: 8

By acceptance of this ticket (with or without signature), driver accepts on behalf of himself/his employer sole responsibility to ensure that the load received is within the weight limit authorized by law and shall hold seller harmless against any and all claims with respect to same

Carrier:
Vehicle: 579SOL75 SOLID FINISH

Received: _____ Cust: _____

Weighmaster: Worrell, Andy P/D Status: **Pickup**

Copy 2 Scale: 1

Hanson

Plant:5791200

Monon Stone Quarry
SOURCE 2409 Q# 022197
38 E. Quarry Rd. PH: (219)253-1012
Monon, IN 47959

11/22/2019 3:20:16PM In : 12:00:00AM
Customer: 4952009 R & W CONTRACTING INC
Order : 186296 P579 - Loeb Stadium (2019-2020)
Ship Ref:
Cust Ref: Loeb Stadium Lafayette In.
Product : 01801 INDIANA #53 CAPP
P.O. :
Release ID:

Tkt. No. 1450075078

	UNIT	TOTALS
Material:		
Freight:		
Tax:		
Fee / Fuel:		
Other Chrg:	No	

	Pounds	Tons
Gross	66,780	33.39
Tare	28,880 *	14.44 *
Net	37,900	18.95

* P. T. 18.95 Ton

Today: 173.79 Loads: 9

By acceptance of this ticket (with or without signature), driver accepts on behalf of himself/his employer sole responsibility to ensure that the load received is within the weight limit authorized by law and shall hold seller harmless against any and all claims with respect to same

Carrier :
Vehicle : 579SOL70 SOLID FINISH

Received: _____ Cust: _____

Weighmaster: Worrell. Andy P/D Status: **Pickup** Copy 2 Scale: 1

Hanson

Plant: 5791200

Monon Stone Quarry
SOURCE 2409 Q# 022197
38 E. Quarry Rd. PH: (219)253-1012
Monon, IN 47959

11/22/2019 9:42:30AM In : 9:32:04AM
Customer: 4952009 R & W CONTRACTING INC
Order : 186296 P579 - Loeb Stadium (2019-2020)
Ship Ref:
Cust Ref: Loeb Stadium Lafayette In.
Product : 01653 INDIANA #8 AP CAPP
P.O. :
Release ID:

Tkt. No. 1450074981

	UNIT	TOTALS
Material:		
Freight:		
Tax:		
Fee / Fuel:		
Other Chrg:	No	

	Pounds	Tons
Gross	66,780	33.39
Tare	28,880	14.44
Net	37,900	18.95

18.95 Ton

Today: 18.95 Loads: 1

By acceptance of this ticket (with or without signature), driver accepts on behalf of himself/his employer sole responsibility to ensure that the load received is within the weight limit authorized by law and shall hold seller harmless against any and all claims with respect to same

Carrier :
Vehicle : 579SOL70 SOLID FINISH

Received: _____ Cust: _____

Weighmaster: Worrell. Andy P/D Status: **Pickup** Copy 3 Scale: 1

KETTELHUT CONSTRUCTION, INC. General Contractor/Construction Manager

740 Sagamore Parkway South
Lafayette, IN 47905
(765) 447-2181
Fax (765) 447-7122

January 21, 2020

Mr. Dan McCloskey
American Structurepoint, Inc.
9025 River Road, Suite 200
Indianapolis, IN 46240

Re: Loeb Stadium Renovation
Lafayette, Indiana
Kettelhut Project No. 6617

Gentlemen:

Enclosed please find cost documentation from applicable Contractors regarding relocation of the 8" waterline that was in conflict with the new sanitary sewer located in the zoo parking lot. We have yet to receive responses from Contractors labeled N/R, but do not anticipate any other costs or credits than those shown below.

1.	BP #1 – General Trades	JR Kelly Co., Inc.	$ 14,104.00
2.	BP #2 – Masonry	James Scharer Masonry, Inc.	N/R
3.	BP #3 – Steel	Almet, Inc.	N/R
4.	BP #4 – Roofing	Horning Roofing & Sheet Metal Co., LLC	N/R
5.	BP #5 – Alum.	Central Indiana Glass & Glazing, Inc.	N/R
6.	BP #6 – Fire Sprinklers	Dalmatian Fire, Division of Shambaugh & Son, L.P.	N/R
7.	BP #7 – Mechanical	D. A. Dodd, LLC	N/R
8.	BP #8 – Electrical	Huston Electric, Inc.	N/R
9.	BP #9 – Sports Lighting	Custer Electric, Inc.	N/R
10.	BP #10 – Scoreboard		
11.	BP #11 – Turf	Sprinturf, Inc.	N/R
12.	BP #12 – Stadium Seat	Irwin Seating Company	N/R
13.	BP #13 – Food Service	C&T Design & Equipment Co.	N/R
			$ 14,104.00

After your review, if this cost data is approved by your firm and the Owner, please advise in order for a Change Order to be initiated.

Sincerely,

KETTELHUT CONSTRUCTION, INC.

D. Alex Gonzalez
Executive Vice President

DAG: jas

Enclosure

cc: Field Office
City of Lafayette w/enclosure
Field Order 6617.038

J.R. KELLY COMPANY
GENERAL CONTRACTORS

January 20, 2020

Kettelhut Construction Inc.
740 Sagamore Parkway South
Lafayette, IN 47905

Attn: Alex Gonzalez

Re: Zoo Parking Lot Waterline Relocation Proposal (RFI #64 KCI Field Order 6617.038)
Loeb Stadium – General Trades

J.R. Kelly Company is pleased to provide T&M cost information for the relocation of the 8" waterline that was in conflict with the new sanitary sewer located in the Zoo Parking lot (just east of the future ramp retaining wall – see JRK RFI #41 / project RFI #64 dated 1/8/20 for more information). As directed in the RFI response R&W relocated the line on a T&M basis. The cost for the work is:

R&W Contracting Cost	$13,299
JRK OH&P 5%	$665
Bond	$140

TOTAL COST FOR WORK DESCRIBED ABOVE: $14,104

Please issue a Change Order for this work so that we can incorporate this change into contract. If you have any questions or need additional information please contact our office at your earliest convenience. Thank you for the opportunity to work with you on this project.

Sincerely,

Robert Mutzl P.E.
Executive VP

Attachments: R&W Pricing and T&M Sheets

(765) 772-3991 FAX (765) 772-3996
3450 CONCORD ROAD LAFAYETTE, IN 47909

Request for Change - Loeb Stadium

To: 1/16/2020
Rob Mutzl
JR Kelly Company

From:
R&W Contracting, Inc.
3131 Klondike Road
West Lafayette, IN 47906
765-499-9390

Relocated Water Line in Zoo Parking to Avoid Sanitary Sewer Conflict

Description	Rate	Quantity		Total
Linkbelt 290	200	9	HR	1,800
Gehl CTL 75	65	10	HR	650
Service Truck	50	2	HR	100
Triaxle Dump Truck with Driver (R&W)	100	2	HR	200
Superintendent	70	9	HR	630
Operator	60	19	HR	1,140
Laborer	50	14	HR	700
#8 Stone (Delivered)	15.75	60	TN	945
8" Ductile Iron Pipe	22.95	80	FT	1,836
8" Gate Valve	1010	2	EA	2,020
Valve Box	85	2	EA	170
Valve Box Aligner	6	2	EA	12
8" 90° Elbow	118	1	EA	118
8" 45° Elbow	96	2	EA	192
8" 22.5° Elbow	94	1	EA	94
8" 11.25° Elbow	94	2	EA	188
8" Tee	175	1	EA	175
8" One-Lok Megalug	55	16	EA	880
8" Solid Sleeve	120	2	EA	240
Subtotal				$ 12,090
P&OH (10%)				$ 1,209
Total				**$ 13,299**

R & W CONTRACTING, INC.
3131 Klondike Rd.
W. Lafayette, IN 47906-5213
Phone (765) 463-1174
Fax (765) 497-7782

Time & Material Report

Date: 11/5/2020
Job #: Lab Stadium
Supervisors Name: Cody Sondgeroth

Description of Work Performed: Relocated Water main in 200 parking Lot.

Personnel: Operators, Laborers,

Material: (Attach shipping list or invoice):

HOURS:		RATE	EXTENSION
	EXCAVATOR:		
8	Linkbelt 4300Q	$200	
	Linkbelt 290	$200	
	Komatsu PC 200 LC-6	$150	
	Komatsu PC 138	$100	
	Komatsu PC 78	$75	
	Takehuci TB 145	$50	
	BULLDOZERS		
	Case 1450B	$110	
	Case 1150G	$110	
	Case 850B	$75	
	GPS Guidance	$75	
	BACKHOES & SKIDLOADERS		
8	Fermac	$50	
	Gehl CTL 75	$65	
	Gehl CTL 70	$65	
	COMPACTORS		
	IR-SD 70	$75	
	IR-SPF 48	$60	
	Large Plate compactor	$25	
	Small Plate Compactor	$15	
	OTHER EQUIPMENT:		
2	Service Truck	$50	
	Tri-axle dump truck wil Driver	$100	
	Other:_____		
	LABOR		
8	Field Superintendent	$70	
16	Operator	$60	
14	Laborer	$50	
	Traffic Control	$35	

Field Superintendent signiture:
(sign and return copy to GC and R&W Contracting office)

R & W CONTRACTING, INC.
3131 Klondike Rd.
W. Lafayette, IN 47906-5213
Phone (765) 463-1174
Fax (765) 497-7782

Time & Material Report

Date: 1/16/2020
Job #: Loch
Supervisors Name: Cody Sondgeroth

Description of Work Performed: Finished backfill from water line relocate, 3 Load 8's stone, 3 loads haul off dirt.

Personnel: Operator, Truck

Material: (Attach shipping list or invoice):

HOURS:		RATE	EXTENSION
	EXCAVATOR:		
1	Linkbelt 4300Q	$200	
	Linkbelt 290	$200	
	Komatsu PC 200 LC-6	$150	
	Komatsu PC 138	$100	
	Komatsu PC 78	$75	
	Takehuci TB 145	$50	
	BULLDOZERS		
	Case 1450B	$110	
	Case 1150G	$110	
	Case 850B	$75	
	GPS Guidance	$75	
	BACKHOES & SKIDLOADERS		
2	Fermac	$50	
	Gehl CTL 75	$65	
	Gehl CTL 70	$65	
	COMPACTORS		
	IR-SD 70	$75	
	IR-SPF 48	$60	
	Large Plate compactor	$25	
	Small Plate Compactor	$15	
	OTHER EQUIPMENT:		
2	Service Truck	$50	
	Tri-axle dump truck wil Driver	$100	
	Other:		
	LABOR		
1	Field Superintendent	$70	
3	Operator	$60	
	Laborer	$50	
	Traffic Control	$35	

Field Superintendent signiture:
(sign and return copy to GC and R&W Contracting office)

Hanson

Plant:5791200

Monon Stone Quarry
SOURCE 2409 Q# 022197
38 E. Quarry Rd. PH: (219)253-1012
Monon, IN 47959

1/16/2020 **11:03:38AM** In : **12:00:00AM**
Customer: 4952009 R & W CONTRACTING INC
Order : 183602 D579 - Loeb Stadium 2019-2020
Ship Ref:
Cust Ref: Loeb Stadium Lafayette In.
Product : 01653 INDIANA #8 AP CAPP
P.O. : 1915 Scott Street
Release ID:

Tkt. No. 1450076544

	UNIT	TOTALS
Material:		
Freight:		
Tax:		
Fee / Fuel:		
Other Chrg:	No	

	Pounds	Tons
Gross	67,380	33.69
Tare	27,400 *	13.70 *
Net	39,980	19.99

* P. T. **19.99** Ton

Today: 59.02 Loads: 3

Carrier : 9726051 AMERICAN PAVING & ASPHAI
Vehicle : 579AP18 AMERICAN PAVING

By acceptance of this ticket (with or without signature), driver accepts on behalf of himself/his employer sole responsibility to ensure that the load received is within the weight limit authorized by law and shall hold seller harmless against any and all claims with respect to same

Received:_____ Cust: _____

Weighmaster: Worrell, Andy P/D Status: **Deliver** Copy 2 Scale: 1

Hanson

Plant:5791200

Monon Stone Quarry
SOURCE 2409 Q# 022197
38 E. Quarry Rd. PH: (219)253-1012
Monon, IN 47959

1/16/2020 **7:24:12AM** In : **7:17:32AM**
Customer: 4952009 R & W CONTRACTING INC
Order : 183602 D579 - Loeb Stadium 2019-2020
Ship Ref:
Cust Ref: Loeb Stadium Lafayette In.
Product : 01653 INDIANA #8 AP CAPP
P.O. : 1915 Scott Street
Release ID:

Tkt. No. 1450076540

	UNIT	TOTALS
Material:		
Freight:		
Tax:		
Fee / Fuel:		
Other Chrg:	No	

	Pounds	Tons
Gross	66,680	33.34
Tare	27,400	13.70
Net	39,280	19.64

19.64 Ton

Today: 19.64 Loads: 1

Carrier : 9726051 AMERICAN PAVING & ASPHAI
Vehicle : 579AP18 AMERICAN PAVING

By acceptance of this ticket (with or without signature), driver accepts on behalf of himself/his employer sole responsibility to ensure that the load received is within the weight limit authorized by law and shall hold seller harmless against any and all claims with respect to same

Received:_____ Cust: _____

Weighmaster: Worrell, Andy P/D Status: **Deliver** Copy 2 Scale: 1

Hanson

Plant:5791200

Monon Stone Quarry
SOURCE 2409 Q# 022197
38 E. Quarry Rd. PH: (219)253-1012
Monon, IN 47959

1/16/2020 **9:07:20AM** In : **12:00:00AM**
Customer: 4952009 R & W CONTRACTING INC
Order : 183602 D579 - Loeb Stadium 2019-2020
Ship Ref:
Cust Ref: Loeb Stadium Lafayette In.
Product : 01653 INDIANA #8 AP CAPP
P.O. : 1915 Scott Street
Release ID:

Tkt. No. 1450076542

	UNIT	TOTALS
Material:		
Freight:		
Tax:		
Fee / Fuel:		
Other Chrg:	No	

	Pounds	Tons
Gross	66,180	33.09
Tare	27,400 *	13.70 *
Net	38,780	19.39

* P. T. **19.39** Ton

Today: 39.03 Loads: 2

Carrier : 9726051 AMERICAN PAVING & ASPHAI
Vehicle : 579AP18 AMERICAN PAVING

By acceptance of this ticket (with or without signature), driver accepts on behalf of himself/his employer sole responsibility to ensure that the load received is within the weight limit authorized by law and shall hold seller harmless against any and all claims with respect to same

Received:_____ Cust: _____

Weighmaster: Worrell, Andy P/D Status: **Deliver** Copy 2 Scale: 1

From:TEAM E. J. PRESCOTT, To:7654977782 ACCOUNTS PAYABLE Msg#1274426.0.1 01/15/2020 22:52 Page 3 of 6

Page No.	1
Invoice No.	5657892
Inv. Date:	1/14/20
Order No.	5657892
Cust. No.	5638
Branch No.	190

REMIT TO
TEAM EJP Lafayette, IN.
E.J. PRESCOTT INC.
P.O. BOX 350002
BOSTON, MA 02241-0502

WAREHOUSE
TEAM EJP Lafayette, IN.
400 Hamman Street
Lafayette, IN 47905
Telephone: 765-449-2723

SOLD TO
R & W CONTRACTING INC
3131 KLONDIKE ROAD
WEST LAFAYETTE, IN 47906

SHIP TO
Customer Pickup

Customer P.O. No.	Job Name	Job No.	Sls	Due Date	Ship Date	Shipping Method
	LOEB		109	2/13/20	1/14/20	Pickup

Ln	Product No. / Description	U/M	Qty.	Price	Disc%	Extended
1	20355 FST 8 FST DUCTILE PIPE PC350	FT	80	22.9500		1,836.00
2	39469 2 8 MJ DI RS VALVE OL	EA	1	1010.0000		1,010.00
3	39336 3 6 MJ DI RS VALVE OL	EA	1	675.0000		675.00
4	33660 600D 8 MJ DI 90 BEND CL	EA	1	118.0000		118.00
5	33625 600D 8X6 MJ DI TEE CL	EA	1	145.0000		145.00
6	33670 600D 8 MJ DI 45 BEND CL	EA	2	96.0000		192.00
7	44280 8 ONE-LOK PACK DI W/BLUE B&N	EA	14	55.0000		770.00
8	44200 6 ONE-LOK PACK DI W/BLUE B&N	EA	3	42.0000		126.00
9	45037 600 26/36 VALVE BOX SCR W/CVR 664S	EA	2	85.0000		170.00
10	45158 BOX-SEAT VALVE BOX ALIGNER "QWP"	EA	2	6.0000		12.00
11	33810 600D 8X12 MJ DI SOLID SLEEVE CL	EA	2	120.0000		240.00

PLEASE USE THE REMIT TO ADDRESS BELOW TO MAIL YOUR PAYMENT FOR FASTEST CREDIT TO YOUR ACCOUNT.
P.O. BOX 350002 BOSTON, MA. 02241-0502

Amount	5,294.00
Tax Amt	.00
Freight	.00
Other Chg	.00
TOTAL DUE	5,294.00

From:TEAM E. J. PRESCOTT, To:7654977782 ACCOUNTS PAYABLE 01/16/2020 22:47 Page 1 of 1 Msg#1274787.0.1

REMIT TO
TEAM EJP Lafayette, IN.
E.J. PRESCOTT INC.
P.O. BOX 350002
BOSTON, MA 02241-0502

WARE HOUSE
TEAM EJP Lafayette, IN.
400 Hamman Street
Lafayette, IN 47905
Telephone: 765-449-2723

Page No.	1
Invoice No.	5658148
Inv. Date:	1/15/20
Order No.	5658148
Cust. No.	5638
Branch No.	190

SOLD TO
R & W CONTRACTING INC
3131 KLONDIKE ROAD
WEST LAFAYETTE, IN 47906

SHIP TO
Customer Pickup

Customer P.O. No.	Job Name	Job No.	Sls	Due Date	Ship Date	Shipping Method
	LOEB		109	2/14/20	1/15/20	Pickup

Ln	Product No. / Description		U/M	Qty.	Price	Disc%	Extended
1	39336 3	6 MJ DI RS VALVE OL	EA	1-	675.0000		675.00-
2	44200	6 ONE-LOK PACK DI W/BLUE B&N	EA	3-	42.0000		126.00-
3	39469 2	8 MJ DI RS VALVE OL	EA	1	1010.0000		1,010.00
4	44280	8 ONE-LOK PACK DI W/BLUE B&N	EA	2	55.0000		110.00
5	33690 600D	8 MJ DI 11 1/4 BEND CL	EA	2	94.0000		188.00
6	33625 600D	8X6 MJ DI TEE CL	EA	1-	145.0000		145.00-
7	33615 600D	8 MJ DI TEE CL	EA	1	175.0000		175.00

PLEASE USE THE REMIT TO ADDRESS BELOW TO MAIL YOUR PAYMENT FOR FASTEST CREDIT TO YOUR ACCOUNT.
P.O. BOX 350002 BOSTON, MA. 02241-0502

Amount	537.00
Tax Amt	.00
Freight	.00
Other Chg	.00
TOTAL DUE	537.00

FROM:TEAM E. J. PRESCOTT, TO:7654977782 ACCOUNTS PAYABLE MSG#1274788.0.1 01/15/2020 22:46 Page 1 of 1

Page No.	1
Invoice No.	5658337
Inv. Date:	1/15/20
Order No.	5658337
Cust. No.	5638
Branch No.	190

REMIT TO
TEAM EJP Lafayette, IN.
E.J. PRESCOTT INC.
P.O. BOX 350002
BOSTON, MA
02241-0502

WARE HOUSE
TEAM EJP Lafayette, IN.
400 Hamman Street
Lafayette, IN
47905
Telephone: 765-449-2723

SOLD TO
R & W CONTRACTING INC
3131 KLONDIKE ROAD
WEST LAFAYETTE, IN
47906

SHIP TO
Customer Pickup

Customer P.O. No.	Job Name	Job No.	Sls	Due Date	Ship Date	Shipping Method
	LOEB		109	2/14/20	1/15/20	Pickup

Ln	Product No. / Description	U/M	Qty.	Price	Disc%	Extended
1	33680 600D 8 MJ DI 22 1/2 BEND CL	EA	1	94.0000		94.00

PLEASE USE THE REMIT TO ADDRESS BELOW TO MAIL YOUR PAYMENT FOR FASTEST CREDIT TO YOUR ACCOUNT.
P.O. BOX 350002 BOSTON, MA. 02241-0502

Amount	94.00
Tax Amt	.00
Freight	.00
Other Chg	.00
TOTAL DUE	94.00

Approved by the Board of Public Works and Safety on the _____day of _____, 2020.

_____
Gary Henriott, President

_____
Cindy Murray, member

_____
Norm Childress, member

_____
Ronald Shriner, member

_____
Amy Moulton, member

ATTEST:

_____
Mindy Miller, Deputy Clerk

Date: _____

CHANGE ORDER

CONSTRUCTION MANAGER-ADVISER EDITION

Owner	☐
Construction Manager	☐
Architect	☐
Contractor	☐
Field	☐
Other	☐

PROJECT: *(Name and address)*	**Loeb Stadium** **Main Street and Wallace Street** **Lafayette, Indiana**	CHANGE ORDER NO.:	**BP-1-5**
		INITIATION DATE:	**March 26, 2020**
TO CONTRACTOR: *(Name and address)*	**J.R. Kelly Company, Inc.** **3450 Concord Road** **Lafayette, IN 47909**	PROJECT NOS.:	**6617**
		CONTRACT FOR:	**BP #1 - General Trades**
		CONTRACT DATE:	**June 4, 2019**

The Contract is changed as follows:

6617.036 - American Structurepoint Proposal Request #5, as it pertains to the press level drainage.	**Add**	**$443.00**
6617.040 - American Structurepoint Proposal Request #7, as it pertains to field level drainage.	**Add**	**$5,471.00**
6617.042 - American Structurepoint Proposal Request #8, as it pertains to door hardware changes	**Deduct**	**-$2,788.00**
6617.045 - Foul pole foundation changse as indicated inAmerican Structurpoint response to RFI #70.	**Add**	**$987.00**
	TOTAL	**$4,113.00**

Not valid until signed by the Owner, Construction Manager, Architect and Contractor.

The original (Contract Sum) (Guaranteed Maximum Price) was……..	$	**10,480,000.00**
Net change by previously authorized Change Orders……..	$	**37,695.00**
The (Contract Sum) (~~Guaranteed Maximum Price~~) prior to this Change Order was…….	$	**10,517,695.00**
The (Contract Sum) (~~Guaranteed Maximum Price~~) will be (increased) ~~(decreased) (unchanged~~) by this Change Order……..……..……..	$	**4,113.00**
The new (Contract Sum) (~~Guaranteed Maximum Price~~) including this Change Order will be……	$	**10,521,808.00**
The Contract Time will be (~~increased~~) (~~decreased~~) (unchanged) by …….		**(0) days**
The dated of Substantial Completion as of the date of this Change Order therefore is ……...……..……		**Unchanged**

NOTE: This summary does not reflect changes in the Contract Sum, Contract Time or Guaranteed Maximum Price which have been authorized by Construction Change Directive.

Kettelhut Construction, Inc.	American StructurePoint Inc.
CONSTRUCTION MANAGER	ARCHITECT
740 Sagamore Parkway S., Lafayette, IN 47905	157 East Maryland Street, Indianapolis, IN 46204
ADDRESS	ADDRESS
D. Allyn Gamb 03/30/2020	Dan McClay 03.30.2020
BY DATE	BY DATE
J.R. Kelly Company, Inc.	City of Lafayette - Engineering
CONTRACTOR	OWNER
3450 Concord Road, Lafayette, IN 47909	20 N. 6th Street, Lafayette, IN 47901
ADDRESS	ADDRESS
Robert Mutzl 3/30/20	Jeremy L. Grenard 4/15/2020
BY DATE	BY DATE

KETTELHUT CONSTRUCTION, INC. General Contractor/Construction Manager

740 Sagamore Parkway South
Lafayette, IN 47905
(765) 447-2181
Fax (765) 447-7122

January 22, 2020

Mr. Dan McCloskey
American Structurepoint, Inc.
9025 River Road, Suite 200
Indianapolis, IN 46240

Re: Loeb Stadium Renovation
Lafayette, Indiana
Kettelhut Project No. 6617

Gentlemen:

Enclosed please find cost documentation from applicable Contractors regarding American Structurepoint Proposal Request No. 6, as it pertains to adding storm pipe and deck drains. We have yet to receive responses from Contractors labeled N/R, but do not anticipate any other costs or credits than those shown below.

1.	BP #1 – General Trades	JR Kelly Co., Inc.	$ 443.00
2.	BP #2 – Masonry	James Scharer Masonry, Inc.	N/R
3.	BP #3 – Steel	Almet, Inc.	N/R
4.	BP #4 – Roofing	Horning Roofing & Sheet Metal Co., LLC	N/R
5.	BP #5 – Alum.	Central Indiana Glass & Glazing, Inc.	N/R
6.	BP #6 – Fire Sprinklers	Dalmatian Fire, Division of Shambaugh & Son, L.P.	N/R
7.	BP #7 – Mechanical	D. A. Dodd, LLC	$ 20,067.00
8.	BP #8 – Electrical	Huston Electric, Inc.	N/R
9.	BP #9 – Sports Lighting	Custer Electric, Inc.	N/R
10.	BP #10 – Scoreboard		
11.	BP #11 – Turf	Sprinturf, Inc.	N/R
12.	BP #12 – Stadium Seat	Irwin Seating Company	N/R
13.	BP #13 – Food Service	C&T Design & Equipment Co.	N/R
			$ 20,510.00

After your review, if this cost data is approved by your firm and the Owner, please advise in order for a Change Order to be initiated.

Sincerely,

KETTELHUT CONSTRUCTION, INC.

D. Alex Gonzalez
Executive Vice President

DAG: jas

Enclosure

cc: Field Office
City of Lafayette w/enclosure
Field Order 6617.036

AMERICAN STRUCTUREPOINT INC.

7260 Shadeland Station, Indianapolis, Indiana 46256
TEL 317.547.5580 FAX 317.543.0270

www.structurepoint.com

Proposal Request No. 006

Project Name: Loeb Stadium
Project Number: 2015.02410
Date: 11/16/2019

OWNER:
City of Lafayette, Indiana – Board of Public Works and Safety
20 North 6th Street
Lafayette, IN 47901

ARCHITECT / STRUCTURAL ENGINEER / CIVIL ENGINEER
American Structurepoint, Inc.
9025 River Road, Suite 200
Indianapolis, Indiana 46240
317.547.5580

MECHANICAL / PLUMBING / ELECTRICAL ENGINEER
Applied Engineering Services, Inc.
5975 Castle Creek Parkway N Drive, Suite 300
Indianapolis, IN 46250
317.810.4141

This Proposal Request is for informational and pricing purposes only and shall not be interpreted as instruction to perform the proposed Work indicated herein. Contractor shall detail all costs associated with the Work, itemized at a minimum by labor, material, overhead and profit. Specify whether the change in Work is an ADD, DEDUCT or NO CHANGE to the contract. After receiving pricing, the Architect shall direct the Contractor regarding how to proceed. If, and only if, the Work outlined in this Proposal Request causes no change in Contract sum or time, the Contractor may then proceed with the Work listed herein, at which point, said Work shall become part of the Contract Documents and modify the original Contract Documents and all prior changes as applicable. Requirements of the original Contract Documents and previous changes remain in effect except as modified by this Proposal Request.

The extent of this Proposal Request is as follows:

DOCUMENT MODIFICATIONS

DRAWINGS

A. See clouded revisions on the attached drawings.
   1. Drawing P300.B add storm pipe below MECH/ELEC room 119.
   2. Drawing P302.B add storm pipe serving Deck Drains where shown.
   3. Drawing P303.B add Deck Drains DD-2 where shown on the Press Level Concourse.
   4. Drawing P601 "Drainage Fixture Schedule" DD-2 drain has change to similar to a J R Smith 1610.

END OF PROPOSAL REQUEST.

J.R. KELLY COMPANY
GENERAL CONTRACTORS

December 13, 2019

Kettelhut Construction Inc.
740 Sagamore Parkway South
Lafayette, IN 47905

Attn: Alex Gonzalez

Re: PR #006 Added Press Level Drains Proposal
Loeb Stadium – General Trades

J.R. Kelly Company is pleased to provide pricing associated with the changes shown in PR #006. During our conversations we were told that D.A. Dodd will provide and set all piping and the drains themselves into the steel decking. D.A. Dodd will also seal the drains at the deck so keep concrete from leaking through around the pipe. Thus our only work would be to install tape on the drains to protect them while we are placing and finishing the concrete. Our pricing includes installing and removing protective tape and then cleaning any concrete from the drain grate as needed. We have been told that the drains will not be recessed much (if any at all). So our pricing assumes that we are only dishing the concrete for a 12" diameter area around the drain at most. The drawings indicate that we are adding (7) seven drains at the press level. The cost associated with this work is:

JR Kelly Material	$0
JR Kelly Labor (1 mnhr each)	$399
10% OH&P	$40
Bond	$4
TOTAL LUMP COST FOR CHANGE ...	**$443***

*Note that if D.A. Dodd installs and removes protective tape and we do not need to provide any dishing of the concrete at the drains then there will be no added cost for us on this PR.

Our proposal is valid for 30 days. Please issue a Change Order for this work if you would like for us to incorporate this change into our work. If you have any questions or need additional information please contact our office at your earliest convenience. Thank you for the opportunity to work with you on this project.

Sincerely,

Robert Mutzl P.E.
Executive VP

(765) 772-3991 FAX (765) 772-3996
3450 CONCORD ROAD LAFAYETTE, IN 47909

lab17-036

KETTELHUT CONSTRUCTION, INC. General Contractor/Construction Manager

740 Sagamore Parkway South
Lafayette, IN 47905
(765) 447-2181
Fax (765) 447-7122

March 4, 2020

Mr. Dan McCloskey
American Structurepoint, Inc.
9025 River Road, Suite 200
Indianapolis, IN 46240

Re: Loeb Stadium Renovation
Lafayette, Indiana
Kettelhut Project No. 6617

Gentlemen:

Enclosed please find cost documentation from applicable Contractors regarding PR #007, as it pertains to field drainage changes. We have yet to receive responses from Contractors labeled N/R, but do not anticipate any other costs or credits than those shown below.

1.	BP #1 – General Trades	JR Kelly Co., Inc.	$ 5,471.00
2.	BP #2 – Masonry	James Scharel Masonry, Inc.	N/R
3.	BP #3 – Steel	Almet, Inc.	N/R
4.	BP #4 – Roofing	Horning Roofing & Sheet Metal Co., LLC	N/R
5.	BP #5 – Alum.	Central Indiana Glass & Glazing, Inc.	N/R
6.	BP #6 – Fire Sprinklers	Dalmatian Fire, Division of Shambaugh & Son, L.P.	N/R
7.	BP #7 – Mechanical	D. A. Dodd, LLC	$ 308.00
8.	BP #8 – Electrical	Huston Electric, Inc.	N/R
9.	BP #9 – Sports Lighting	Custer Electric, Inc.	N/R
10.	BP #10 – Scoreboard		
11.	BP #11 – Turf	Sprinturf, Inc.	$ 0.00
12.	BP #12 – Stadium Seat	Irwin Seating Company	N/R
13.	BP #13 – Food Service	C&T Design & Equipment Co.	N/R
			$ 5,779.00

After your review, if this cost data is approved by your firm and the Owner, please advise in order for a Change Order to be initiated.

Sincerely,

KETTELHUT CONSTRUCTION, INC.

D. Alex Gonzalez
Executive Vice President

DAG: jas

Enclosure

cc: Field Office
City of Lafayette w/enclosure
Field Order 6617.040

AMERICAN STRUCTUREPOINT INC.

7260 Shadeland Station, Indianapolis, Indiana 46256
TEL 317.547.5580 FAX 317.543.0270

www.structurepoint.com

Proposal Request No. 007

Project Name: Loeb Stadium
Project Number: 2015.02410
Date: 02/03/2020

OWNER:
City of Lafayette, Indiana – Board of Public Works and Safety
20 North 6th Street
Lafayette, IN 47901

ARCHITECT / STRUCTURAL ENGINEER / CIVIL ENGINEER
American Structurepoint, Inc.
9025 River Road, Suite 200
Indianapolis, Indiana 46240
317.547.5580

MECHANICAL / PLUMBING / ELECTRICAL ENGINEER
Applied Engineering Services, Inc.
5975 Castle Creek Parkway N Drive, Suite 300
Indianapolis, IN 46250
317.810.4141

This Proposal Request is for informational and pricing purposes only and shall not be interpreted as instruction to perform the proposed Work indicated herein. Contractor shall detail all costs associated with the Work, itemized at a minimum by labor, material, overhead and profit. Specify whether the change in Work is an ADD, DEDUCT or NO CHANGE to the contract. After receiving pricing, the Architect shall direct the Contractor regarding how to proceed. If, and only if, the Work outlined in this Proposal Request causes no change in Contract sum or time, the Contractor may then proceed with the Work listed herein, at which point, said Work shall become part of the Contract Documents and modify the original Contract Documents and all prior changes as applicable. Requirements of the original Contract Documents and previous changes remain in effect except as modified by this Proposal Request.

The extent of this Proposal Request is as follows:

DOCUMENT MODIFICATIONS

PROJECT MANUAL

A. No Change

DRAWINGS

A. See clouded revisions on the attached drawings.
   1. C302 – Grading Plan – Updated Grading for Terrace Area at Home Bullpen
   2. C402, C404, C405 – Utility Plan – Updated Drainage at Terrace near Home Bullpen, showing additional underdrains at bullpen and dugout areas.

END OF PROPOSAL REQUEST.

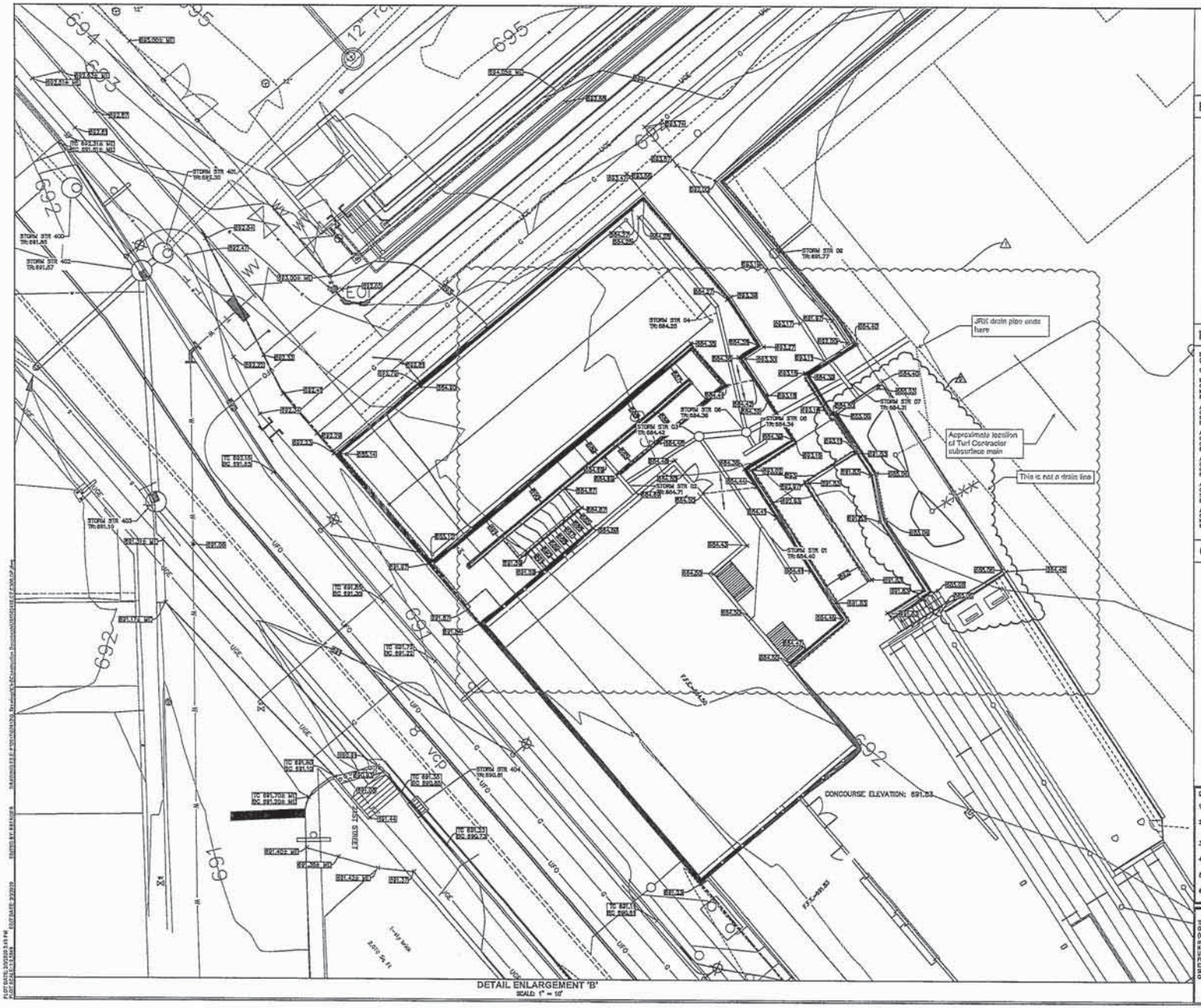

SCALE: 1"=10'

EXISTING LEGEND

BENCHMARK DATA

GRADING LEGEND

GRADING WALL DETAIL
N79
TW TOP OF WALL
FGW FINISH GRADE AT UPPER SIDE OF WALL
FGL FINISH GRADE AT LOWER SIDE OF WALL

GENERAL NOTES

1. CONTRACTOR SHALL PROTECT AND NOT DESTROY THE PROPERTY CORNER MONUMENTS DURING CONSTRUCTION.
2. CONTRACTOR TO VERIFY LOCATION, SIZE AND DEPTH OF EXISTING UTILITIES PRIOR TO CONNECTIONS AND CONSTRUCTION. CONTACT ENGINEER IF VARIATION EXISTS.
3. WATER SLIDE INFORMATION IS SHOWN FOR REFERENCE FROM SCOUT ASSOCIATES.
4. WATER MAIN IMPROVEMENTS SHOWN PER PLAN BY TRESSLER.
5. STORM SEWER AND WALLACE AVENUE IMPROVEMENTS SHOWN PER PLAN BY STRUCTUREPOINT.
6. SEE SHEET C002 GENERAL NOTES FOR MORE INFORMATION.

!! CAUTION !!

THE LOCATIONS OF ALL EXISTING UNDERGROUND UTILITIES SHOWN ON THIS PLAN ARE BASED UPON ABOVE GROUND EVIDENCE (including, but not limited to, manholes, inlets, valves, and marks made upon the ground by others) AND ARE SPECULATIVE IN NATURE. THERE MAY ALSO BE OTHER EXISTING UNDERGROUND UTILITIES FOR WHICH THERE IS NO ABOVE GROUND EVIDENCE OR FOR WHICH NO ABOVE GROUND EVIDENCE WAS OBSERVED. THE EXACT LOCATIONS OF SAID EXISTING UNDERGROUND UTILITIES SHALL BE VERIFIED BY THE CONTRACTOR PRIOR TO ANY AND ALL CONSTRUCTION.

CALL TOLL FREE:
"811" OR 1-800-382-5544
-- INDIANA UNDERGROUND --

CITY OF LAFAYETTE
20 N. 6TH STREET
LAFAYETTE, IN, 47901
CONTACT: Jeremy Stewart

AMERICAN STRUCTUREPOINT INC.
7260 Shadeland Station | Indianapolis, Indiana 46256
TEL 317.543.0180 | FAX 317.543.0270
www.structurepoint.com

LOEB STADIUM

Main Street &
Wallace Avenue
City of Lafayette, Indiana

SURVEY & DRAWING REGISTERED No. 11100062 STATE OF INDIANA PROFESSIONAL ENGINEER

CERTIFIED BY

ISSUANCE INDEX
DATE:
06/13/2019
PROJECT PHASE:
CONSTRUCTION SET

REVISION SCHEDULE		
NO.	DESCRIPTION	DATE
1	ASI001	09/14/17
2	RFI 043	10/25/19
3	RFI 034	11/21/19
4	REV 4 ASI002	01/08/20
5	PR007	02/03/20

Project Number 2015.02410

GRADING PLAN ENLARGEMENT 'B'

C302

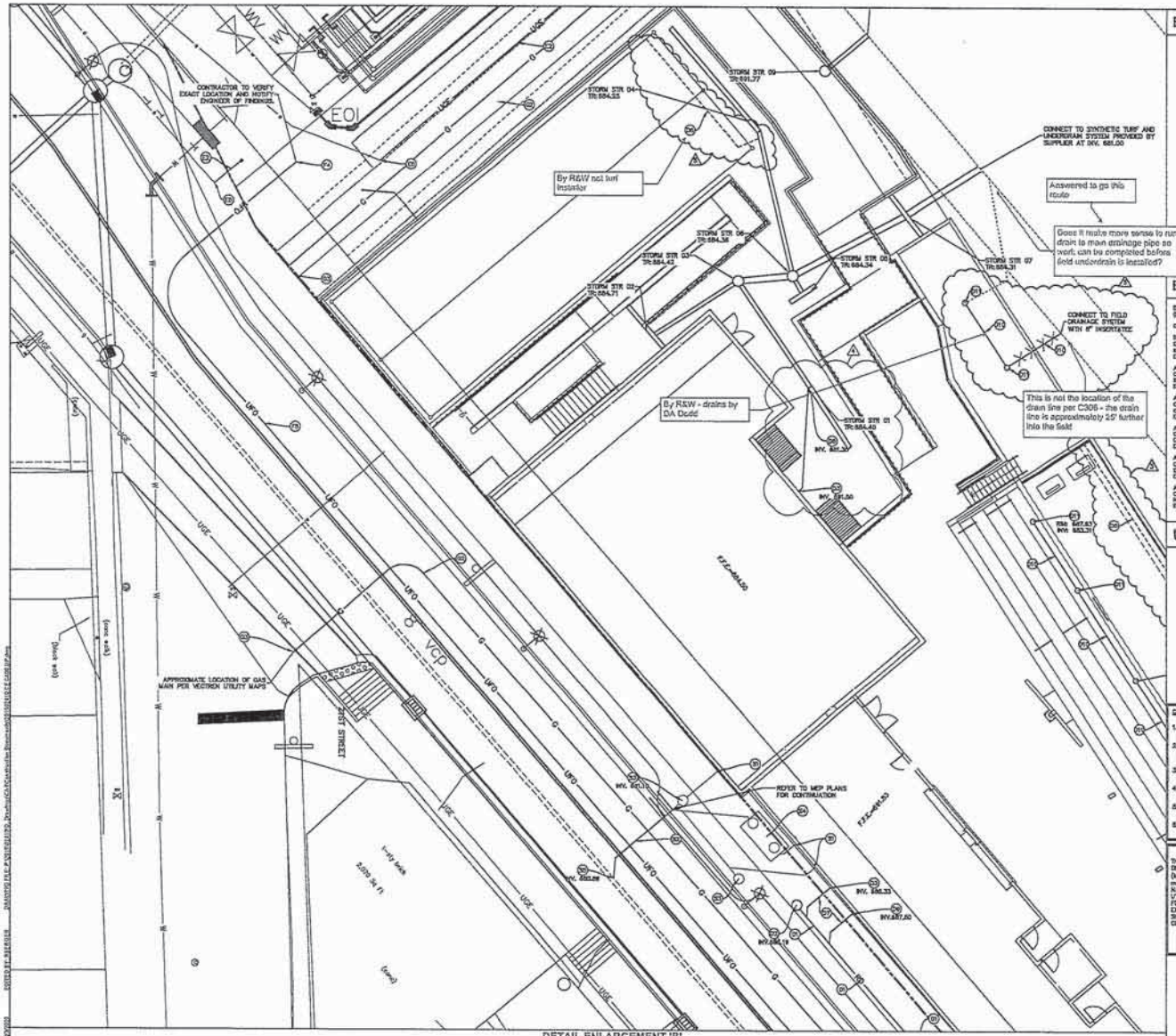

EXISTING LEGEND

AIR CONDITIONER; BOOKE TEE CURB INLET; BOOKVAC INLET; BUSH; CURB INLET; CLEAN OUT; DOMINATION POLE; DRAINAGE MANHOLE; ELECTRIC MANHOLE; ELECTRIC METER BOX; ELECTRIC PEDESTAL; ELECTRIC SERVICE BOX; FLAG POLE; FIRE HYDRANT; GROUND LIGHT; GAS METER; GAS VALVE; GUY WIRE; HOSE BIB; INLET; LIGHT POLE; MAILBOX; MANHOLE; MONITORING WELL; PIPE; POST; APPROXIMATE SANITARY MH LATERAL LOCATION FROM LAFAYETTE DIS; POWER POLE; SATELLITE; SPRINKLER CONTROL VALVE BOX; SANITARY MANHOLE; STAND PIPE; STORM; TELEPHONE MANHOLE; TELEPHONE MARKER SIGN; TELEPHONE POLE; TRANSFORMER; TREE; TRAFFIC POLE; VENT; WATER METER; WATER MANHOLE; WATER VALVE; YARD LIGHT; OVERHEAD GRADE LINE; OVERHEAD ELECTRIC LINE; OVERHEAD TELEPHONE LINE; BURIED ELECTRIC LINE; BURIED GAS LINE; BURIED FIBER OPTIC LINE; BURIED TELEPHONE LINE; BURIED WATER LINE; BURIED STORMSEWER UTILITY LINE; TOP OF PIPE ELEVATION; INVERT ELEVATION; PLASTIC PIPE; REINFORCED CONCRETE PIPE; CLAY PIPE

BENCHMARK DATA

VERTICAL INFORMATION (DATUM NAVD 88)

CONTROL BASED ON OPUS SOLUTION #S3-033433350

BM BASIC #100
CAPPED REBAR ON SW SIDE OF MAIN STREET, 400' SOUTH OF ℄ MEMORIAL STREET, 3' BEHIND WALK.
ELEV =675.88

AS TBM 1
CHISELED SQUARE ON NORTH CORNER OF YELLOW LIGHT BASE, SOUTHWEST SIDE OF MAIN STREET ACROSS FROM FROZEN CUSTARD.
ELEV =676.62

AS TBM 2
CHISELED "X" ON EAST BOLT OF FIRE HYDRANT, SOUTHWEST SIDE OF MAIN STREET, 680' NORTH OF ℄ MEMORIAL STREET.
ELEV =676.19

AS TBM 3
CHISELED SQUARE ON SOUTH CORNER OF TRANS PAD AT NW SIDE OF COLLINSEAN PARK PUMP STATION BUILDING.
ELEV =702.23

AS TBM 4
CHISELED "X" ON SOUTHEAST BOLT OF FIRE HYDRANT, NORTHWEST SIDE OF VILLAGE AVENUE, ACROSS FROM REA #2427.
ELEV =696.11

AS TBM 5
CHISELED SQUARE ON WEST CORNER OF TRANS PAD AT NORTHWEST CORNER OF BASEBALL FIELD BLEACHERS.
ELEV =694.07

UTILITY LEGEND

CTO — ELECTRIC / TELECOMMUNICATIONS LINE
W — WATER LINE
FP — FIRE PROTECTION LINE
RD — ROOF DRAIN LINE
G — GAS LINE
SS — SANITARY LINE
SD — SEWER STORM SEWER
4" DUAL WALL HDPE PAVEMENT UNDERDRAIN @ 0.25% MIN. SLOPE
GAS METER
ELECTRICAL TRANSFORMER
VALVE
WATER METER PIT
FIRE HYDRANT W/ ASSEMBLY

GENERAL NOTES

1. CONTRACTOR SHALL PROTECT AND NOT DESTROY THE PROPERTY CORNER MONUMENTS DURING CONSTRUCTION.
2. CONTRACTOR TO VERIFY LOCATION, SIZE AND DEPTH OF EXISTING UTILITIES PRIOR TO COMMENCING ANY CONSTRUCTION. CONTACT ENGINEER IF VARIATION EXISTS.
3. WATER SLIDE INFORMATION IS SHOWN FOR REFERENCE FROM SCHMIDT ASSOCIATES.
4. WATER MAIN IMPROVEMENTS SHOWN PER PLAN BY NICHOLSON.
5. STORM SEWER AND WALLACE AVENUE IMPROVEMENTS SHOWN PER PLAN BY STRUCTUREPOINT.
6. SEE SHEET C002 GENERAL NOTES FOR MORE INFORMATION.

!! CAUTION !!

THE LOCATIONS OF ALL EXISTING UNDERGROUND UTILITIES SHOWN ON THIS PLAN ARE BASED UPON ABOVE GROUND EVIDENCE (including, but not limited to, manholes, inlets, valves, and marks made upon the ground by others) AND ARE SPECULATIVE IN NATURE. THERE MAY ALSO BE OTHER EXISTING UNDERGROUND UTILITIES FOR WHICH THERE IS NO ABOVE GROUND EVIDENCE OR FOR WHICH NO ABOVE GROUND EVIDENCE WAS OBSERVED. THE EXACT LOCATIONS OF SAID EXISTING UNDERGROUND UTILITIES SHALL BE VERIFIED BY THE CONTRACTOR PRIOR TO ANY AND ALL CONSTRUCTION.

CALL TOLL FREE
"811" OR 1-800-382-5544
– INDIANA UNDERGROUND –

SCALE: 1"=10'

O KEYNOTES

SANITARY SEWER

S1. CONNECT TO PROPOSED BUILDING (REFER TO MEP PLANS FOR CONTINUATION)
S2. 8" PVC SDR-26 SANITARY LATERAL @ 1.04% MIN. SLOPE
S3. SANITARY CLEAN OUT
S4. GREASE INTERCEPTOR/OIL AND GRIT SEPARATOR (COMMERCIAL) PER CITY OF LAFAYETTE DETAILS (REFER TO MEP DRAWINGS)
S5. CONNECT TO EXISTING SANITARY SEWER MAIN

DRAINAGE/STORM SEWER

D1. 12" HDPE PIPE @ 0.25% MIN. SLOPE
D2. STORM CLEANOUT
D3. CONNECT TO PROPOSED BUILDING (REFER TO MEP PLANS FOR CONTINUATION)
D4. CONNECT TO EXISTING STORM STRUCTURE
D5. CONNECT TO PROPOSED STORM STRUCTURE
D6. 4" DUAL WALL HDPE PAVEMENT UNDERDRAIN @ 0.25% MIN. SLOPE
D7. 8" HDPE PIPE @ 1.0% MIN. SLOPE
D8. 8" HDPE PIPE @ 1.82% MIN. SLOPE
D9. CONNECT TO PROPOSED DOWNSPOUT BELOW GRADE (REFER TO ARCHITECTURAL PLANS FOR CONTINUATION)
D10. 6" HDPE PIPE AT 0.6% MIN. SLOPE
D11. 8" X 8" X 4" TEE (REFER TO MEP PLANS FOR EXISTING DETAILS)
D12. CONNECT TO PROPOSED UNDERDRAIN SYSTEM (REFER TO FIELD TURF SPECS)
D13. 6" ECONOMAIRAN SERIES 98 TRENCH DRAIN

WATERLINE

W1. FIRE DEPARTMENT CONNECTION
W2. 4" WATER SERVICE LINE
W3. 6" C900 PVC WATER LINE
W4. PIV
W5. TEE WITH THRUST BLOCKS
W6. BEND WITH THRUST BLOCKS
W7. CONNECT TO EXISTING WATER SERVICE LINE STUB-OUT
W8. CONNECT TO PROPOSED BUILDING (REFER TO MEP PLANS FOR CONTINUATION)

GAS

G1. GAS METER (REFER TO MEP PLANS FOR CONTINUATION.
G2. PROPOSED GAS SERVICE LINE
G3. CONNECT TO EXISTING GAS LINE (COORDINATE WITH UTILITY PROVIDER)

ELECTRIC / TELEPHONE / CABLE

E1. TRANSFORMER PAD (PER UTILITY STANDARDS
E2. ELECTRIC / TELEPHONE / CABLE SERVICE LINE
E3. CONNECT TO PROPOSED TRANSFORMER (COORDINATE WITH LOCAL UTILITY FOR PRIMARY SERVICE TO THE TRANSFORMER)
E4. CONNECT TO BUILDING (REFER TO MEP PLANS FOR CONTINUATION)
E5. CONNECT TO EXISTING ELECTRIC LINE
E6. PROPOSED RELOCATED TELEPHONE MANHOLE
E7. CONNECT TO EXISTING TELEPHONE LINE

FIBER OPTIC

F1. CONNECT TO PROPOSED BUILDING (REFER TO MEP PLANS FOR CONTINUATION)
F2. PROPOSED FIBER OPTIC SERVICE LINE
F3. CONNECT TO RELOCATED FIBER OPTIC LINE (COORDINATE WITH UTILITY PROVIDER)
F4. CONNECT TO EXISTING FIBER OPTIC LINE (COORDINATE WITH UTILITY PROVIDER)
F5. PROPOSED RELOCATED FIBER OPTIC LINE (REFER TO ZAYO PLANS FOR EXACT LOCATION)

MISCELLANEOUS

M1. POTENTIAL UTILITY CONFLICT (ALL WATER/SANITARY/STORM CROSSINGS TO HAVE A MINIMUM OF 18" VERTICAL CLEARANCE. CONTACT ENGINEER IF CONFLICTS EXIST. RELOCATE EXISTING UTILITIES AS REQUIRED.
M2. CONTRACTOR TO FIELD VERIFY LOCATION, DEPTH AND SIZE OF EXISTING UTILITIES TO ENSURE CONFLICTS DO NOT EXIST WITH PROPOSED UTILITIES.
M3. PROPOSED UTILITY CROSSING (ALL WATER/SANITARY/STORM CROSSINGS TO HAVE A MINIMUM OF 18" VERTICAL CLEARANCE. CONTACT ENGINEER IF CONFLICTS EXIST. RELOCATE EXISTING UTILITIES AS REQUIRED.

UTILITY CONTACTS

UTILITY	COMPANY	CONTACT	PHONE NO.
CABLE TELEVISION	COMCAST	JERRY SHUTTERS	(765) 455-5535
ELECTRIC	DUKE	BEN DAVIS	(765) 448-4012
GAS	VECTREN	STEVEN HINTON	(765) 448-8610
SANITARY SEWER	CITY OF LAFAYETTE	PETE CORBIN JR.	(765) 807-1500
TELEPHONE	FRONTIER COMMUNICATIONS	UPC BORGMEIER	(765) 423-3288
WATER	CITY OF LAFAYETTE	STEVE MOORE	(765) 807-1712

CITY OF LAFAYETTE
20 N. 6TH STREET
LAFAYETTE, IN, 47901
CONTACT: Jeremy Gerard

AMERICAN STRUCTUREPOINT INC.
7260 Shadeland Station | Indianapolis, Indiana 46256
TEL 317.547.5580 | FAX 317.543.0270
www.structurepoint.com

LOEB STADIUM

Main Street &
Wallace Avenue
City of Lafayette, Indiana

GREGORY SCHMIDT REGISTERED No. 11100062 STATE OF INDIANA PROFESSIONAL ENGINEER

CERTIFIED BY

ISSUANCE INDEX
DATE:
06/12/2019
PROJECT PHASE:
CONSTRUCTION SET

REVISION SCHEDULE		
NO.	DESCRIPTION	DATE
1	ASI001	09/14/17
2	RFI 043	10/25/19
3	RFI 034	11/21/19
4	REV 4 ASI002	01/08/20
5	PR007	02/03/20

Project Number 2015.02410

UTILITY PLAN ENLARGEMENT 'B'

C402

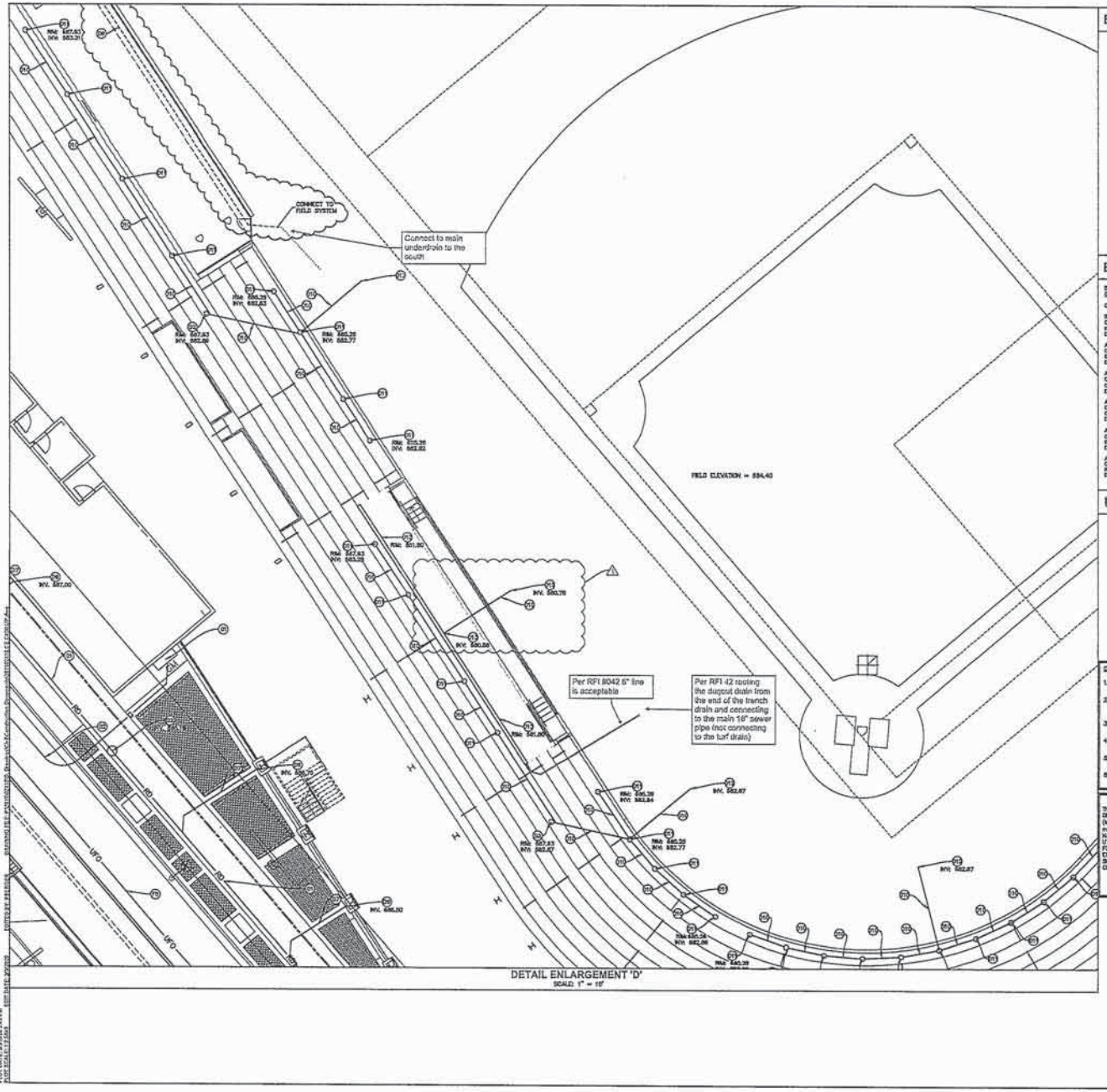

EXISTING LEGEND

AIR CONDITIONER
BEHIND THE CURB INLET
MODINE INLET
BUSH
CURB INLET
CLEAN OUT
COMBINATION POLE
DRAINAGE MANHOLE
ELECTRIC HANDHOLE
ELECTRIC METER BOX
ELECTRIC PEDESTAL
ELECTRIC SPRIES BOX
FLAG POLE
FIRE HYDRANT
GROUND LIGHT
GAS METER
GAS VALVE
GUY WIRE
HOSE BIB
INLET
LID
LIGHT POLE
MAILBOX
MANHOLE
MONITORING WELL
POLE
POST
APPROXIMATE SANITARY SEWER LATERAL LOCATION FROM LAFAYETTE GIS
POWER POLE
SATELLITE
SPRINKLER CONTROL VALVE
SIGN
SANITARY MANHOLE
STAND PIPE
STUMP
TELEPHONE HANDHOLE
TELEPHONE MARKER SIGN
TELEPHONE POLE
TRANSFORMER
TREE
TRAFFIC POLE
VENT
WATER METER
WATER MANHOLE
WATER VALVE
YARD LIGHT
OVERHEAD BRAGE LINE
OVERHEAD ELECTRIC LINE
OVERHEAD TELEPHONE LINE
BURIED ELECTRIC LINE
BURIED GAS LINE
BURIED FIBER OPTIC LINE
BURIED TELEPHONE LINE
BURIED WATER LINE
TOP OF CURB ELEVATION
INVERT ELEVATION
PLASTIC PIPE
REINFORCED CONCRETE PIPE
CLAY PIPE

BENCHMARK DATA

HORIZONTAL INFORMATION
(DATUM NAD 83)

CONTROL BASED ON GPS3 SOLUTION #13-6354350

BM BASE #100
CAPPED REBAR ON SW SIDE OF MAIN STREET, 4.00' SOUTH OF ℄ FOUNTAIN SQUARE'S 3' SEWING WALL.
ELEV =672.69

AS TBM 1
CHISELED SQUARE ON NORTH CORNER OF YELLOW LIGHT BASE, SOUTHWEST SIDE OF MAIN STREET ACROSS FROM FROZEN CUSTARD.
ELEV =668.08

AS TBM 2
CHISELED "X" ON EAST BOLT OF FIRE HYDRANT, SOUTHWEST SIDE OF MAIN STREET, 0.60' NORTH OF ℄ PERDUE STREET.
ELEV =668.18

AS TBM 3
CHISELED SQUARE ON SOUTH CORNER OF TRANS PAD AT NW SIDE OF COLUMBIAN PARK PUMP STATION BUILDING.
ELEV =702.22

AS TBM 4
CHISELED "X" ON SOUTHEAST BOLT OF FIRE HYDRANT, NORTHWEST SIDE OF WALLACE AVENUE, ACROSS FROM REB. #5427.
ELEV =691.31

AS TBM 5
CHISELED SQUARE ON WEST CORNER OF TRANS PAD AT NORTHWEST CORNER OF BASEBALL FIELD BLEACHERS.
ELEV =694.87

UTILITY LEGEND

ETC — ELECTRIC / TELECOMMUNICATIONS LINE
W — WATER LINE
FP — FIRE PROTECTION LINE
RD — ROOF DRAIN LINE
G — GAS LINE
SS — SANITARY LINE
SD — SENIOR STORM SEWER
4" DUAL WALL HDPE PAVEMENT UNDERDRAIN @ 0.25% MIN. SLOPE
GAS METER
ELECTRICAL TRANSFORMER
VALVE
WATER METER PIT
FIRE HYDRANT W/ ASSEMBLY

GENERAL NOTES

1. CONTRACTOR SHALL PROTECT AND NOT DISTURB THE PROPOSED CORNER MONUMENTS DURING CONSTRUCTION.
2. CONTRACTOR TO VERIFY LOCATION, SIZE AND DEPTH OF EXISTING UTILITIES PRIOR TO COMMENCING ANY CONSTRUCTION. CONTACT ENGINEER IF VARIATION EXISTS.
3. WATER SLIDE INFORMATION IS SHOWN FOR REFERENCE FROM SCHMIDT ASSOCIATES.
4. WATER MAIN IMPROVEMENTS SHOWN PER PLAN BY WESS2.0.
5. STORM SEWER AND WALLACE AVENUE IMPROVEMENTS SHOWN PER PLAN BY STRUCTUREPOINT.
6. SEE SHEET C002 GENERAL NOTES FOR MORE INFORMATION.

!! CAUTION !!

THE LOCATIONS OF ALL EXISTING UNDERGROUND UTILITIES SHOWN ON THIS PLAN ARE BASED UPON ABOVE GROUND EVIDENCE (including, but not limited to, manhole lids, valves, and marks made upon the ground by others) AND ARE SPECULATIVE IN NATURE. THERE MAY ALSO BE OTHER EXISTING UNDERGROUND UTILITIES FOR WHICH THERE IS NO ABOVE GROUND EVIDENCE OR FOR WHICH NO ABOVE GROUND EVIDENCE WAS OBSERVED. THE EXACT LOCATIONS OF SAID EXISTING UNDERGROUND UTILITIES SHALL BE VERIFIED BY THE CONTRACTOR PRIOR TO ANY AND ALL CONSTRUCTION.

CALL TOLL FREE
"811" OR 1-800-382-5544
– INDIANA UNDERGROUND –

SCALE: 1"=10'

O KEYNOTES

SANITARY SEWER

S1. CONNECT TO PROPOSED BUILDING (REFER TO MEP PLANS FOR CONTINUATION)
S2. 8" PVC SDR-26 SANITARY LATERAL @ 1.04% MIN. SLOPE
S3. SANITARY CLEAN OUT
S4. GREASE INTERCEPTOR/OIL AND GRIT SEPARATOR (COMMERCIAL) PER CITY OF LAFAYETTE DETAILS (REFER TO MEP DRAWINGS)
S5. CONNECT TO EXISTING SANITARY SEWER MAIN

DRAINAGE/STORM SEWER

D1. 12" HDPE PIPE @ 0.30% MIN. SLOPE
D2. STORM CLEANOUT
D3. CONNECT TO PROPOSED BUILDING (REFER TO MEP PLANS FOR CONTINUATION)
D4. CONNECT TO EXISTING STORM STRUCTURE
D5. CONNECT TO PROPOSED STORM STRUCTURE
D6. 4" DUAL WALL HDPE PAVEMENT UNDERDRAIN @ 0.25% MIN. SLOPE
D7. 8" HDPE PIPE @ 1.0% MIN. SLOPE
D8. 8" HDPE PIPE @ 1.80% MIN. SLOPE
D9. CONNECT TO PROPOSED DOWNSPOUT BELOW GRADE (REFER TO ARCHITECTURAL PLANS FOR CONTINUATION)
D10. 8" HDPE PIPE AT 0.8% MIN. SLOPE
D11. 8" X 8" X 4" TEE (REFER TO MEP PLANS FOR CASTING DETAILS)
D12. CONNECT TO PROPOSED UNDERDRAIN SYSTEM (REFER TO FIELD TURF SPECS)
D13. 8" ECONODRAIN SERIES @8 TRENCH DRAIN

WATERLINE

W1. FIRE DEPARTMENT CONNECTION
W2. 4" WATER SERVICE LINE
W3. 8" C900 PVC WATER LINE
W4. PIV
W5. TEE WITH THRUST BLOCKS
W6. BEND WITH THRUST BLOCKS
W7. CONNECT TO EXISTING WATER SERVICE LINE STUB-OUT
W8. CONNECT TO PROPOSED BUILDING (REFER TO MEP PLANS FOR CONTINUATION)

GAS

G1. GAS METER (REFER TO MEP PLANS FOR CONTINUATION.
G2. PROPOSED GAS SERVICE LINE
G3. CONNECT TO EXISTING GAS LINE (COORDINATE WITH UTILITY PROVIDER)

ELECTRIC / TELEPHONE / CABLE

E1. TRANSFORMER PAD (PER UTILITY STANDARDS
E2. ELECTRIC / TELEPHONE / CABLE SERVICE LINE
E3. CONNECT TO PROPOSED TRANSFORMER (COORDINATE WITH LOCAL UTILITY FOR PRIMARY SERVICE TO THE TRANSFORMER)
E4. CONNECT TO BUILDING (REFER TO MEP PLANS FOR CONTINUATION)
E5. CONNECT TO EXISTING ELECTRIC LINE
E6. PROPOSED RELOCATED TELEPHONE HANDHOLE
E7. CONNECT TO EXISTING TELEPHONE LINE

FIBER OPTIC

F1. CONNECT TO PROPOSED BUILDING (REFER TO MEP PLANS FOR CONTINUATION)
F2. PROPOSED FIBER OPTIC SERVICE LINE
F3. CONNECT TO RELOCATED FIBER OPTIC LINE (COORDINATE WITH UTILITY PROVIDER)
F4. CONNECT TO EXISTING FIBER OPTIC LINE (COORDINATE WITH UTILITY PROVIDER)
F5. PROPOSED RELOCATED FIBER OPTIC LINE (REFER TO DATA PLANS FOR EXACT LOCATION)

MISCELLANEOUS

M1. POTENTIAL UTILITY CONFLICT (ALL WATER/SANITARY/STORM CROSSINGS TO HAVE A MINIMUM OF 18" VERTICAL CLEARANCE. CONTACT ENGINEER IF CONFLICTS EXIST. RELOCATE EXISTING UTILITIES AS REQUIRED.
M2. CONTRACTOR TO FIELD VERIFY LOCATION, DEPTH AND SIZE OF EXISTING UTILITIES TO ENSURE CONFLICTS DO NOT EXIST WITH PROPOSED UTILITIES.
M3. PROPOSED UTILITY CROSSING (ALL WATER/SANITARY/STORM CROSSINGS TO HAVE A MINIMUM OF 18" VERTICAL CLEARANCE. CONTACT ENGINEER IF CONFLICTS EXIST. RELOCATE EXISTING UTILITIES AS REQUIRED.

UTILITY CONTACTS

UTILITY	COMPANY	CONTACT	PHONE NO.
CABLE TELEVISION	COMCAST	JERRY SHUTTOTS	(765) 456-5636
ELECTRIC	DUKE	BEN DAMS	(765) 449-4012
GAS	VECTRON	STEVEN HINTON	(765) 449-3610
SANITARY SEWER	CITY OF LAFAYETTE	PETE CORBIN JR.	(765) 807-1300
TELEPHONE	FRONTIER COMMUNICATIONS	MIKE BOEBINGER	(765) 423-3288
WATER	CITY OF LAFAYETTE	STEVE MOORE	(765) 807-1713

CITY OF LAFAYETTE
20 N. 6TH STREET
LAFAYETTE, IN. 47901
CONTACT: Jeremy Gerard

AMERICAN STRUCTUREPOINT INC.
7260 Shadeland Station | Indianapolis, Indiana 46256
TEL 317.547.5580 | FAX 317.543.5370
www.structurepoint.com

LOEB STADIUM

Main Street &
Wallace Avenue
City of Lafayette, Indiana

REGISTERED No. 11100062 STATE OF INDIANA PROFESSIONAL ENGINEER

CERTIFIED BY

ISSUANCE INDEX
DATE:
06/12/2019
PROJECT PHASE:
CONSTRUCTION SET

REVISION SCHEDULE		
NO.	DESCRIPTION	DATE
1	ASI001	09/14/17
2	RFI 043	10/25/18
3	RFI 034	11/21/18
4	REV 4 ASI002	01/08/20
5	PR007	02/03/20

Project Number 2015.02410

STADIUM SEATING DRAINAGE

C404

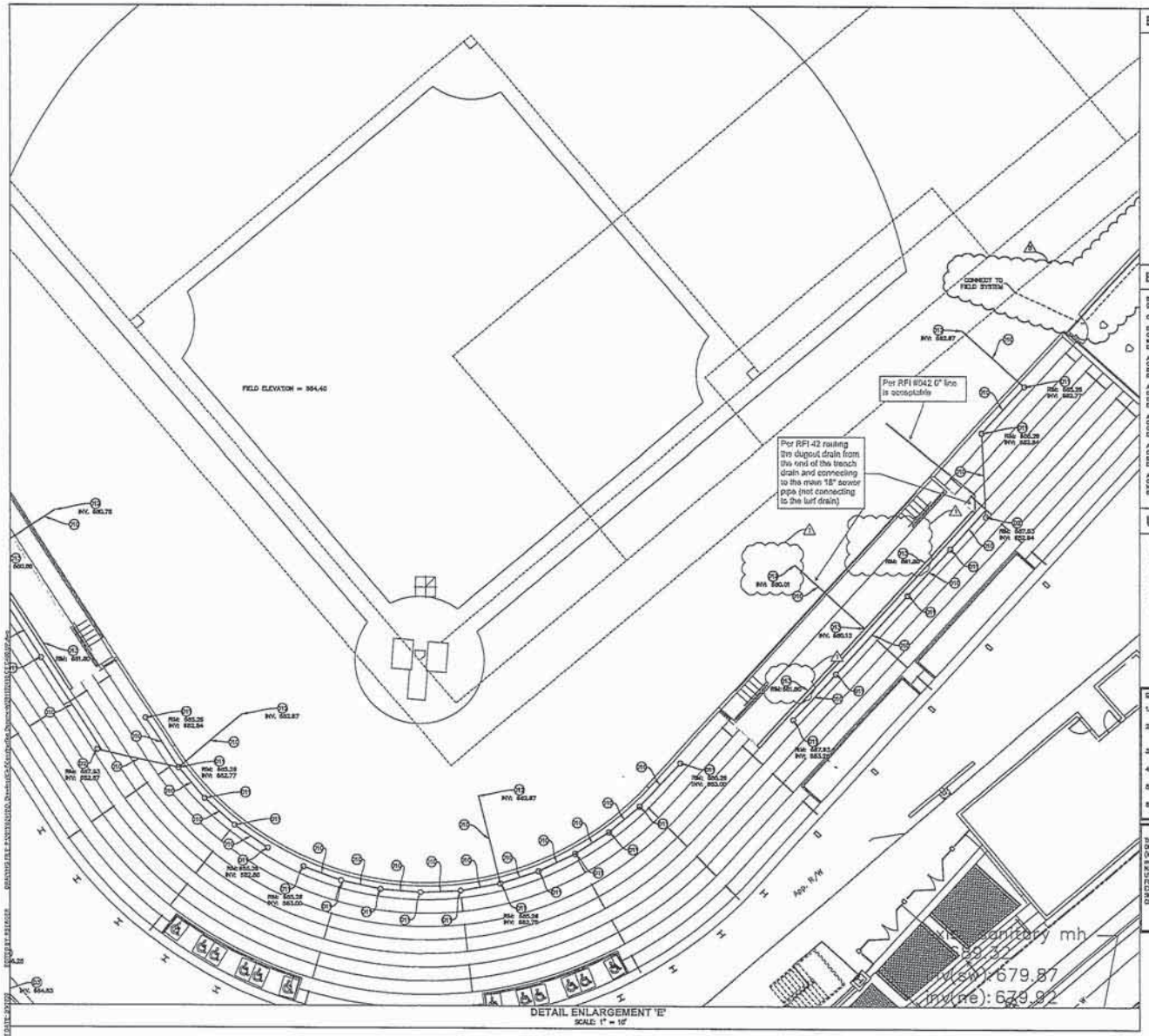

DETAIL ENLARGEMENT 'E'
SCALE: 1" = 10'

EXISTING LEGEND

AIR CONDITIONER
BOARD THE SIDE WALK
BEEHIVE INLET
BUSH
CURB INLET
CLEAN OUT
COMBINATION POLE
DRAINAGE MANHOLE
ELECTRIC MANHOLE
ELECTRIC METER BOX
ELECTRIC PEDESTAL
ELECTRIC SPRICE BOX
FLAG POLE
FIRE HYDRANT
GROUND LIGHT
GAS METER
GAS VALVE
GUY WIRE
HOSE BIB
INLET
LID
LIGHT POLE
MAILBOX
MANHOLE
MONITORING WELL
PHC
POST
APPROXIMATE SANITARY LATERAL LOCATION FROM LAFAYETTE GIS
POWER POLE
SATELLITE
SPRINKLER CONTROL VALVE
SIGN
SANITARY MANHOLE
STAND PIPE
STORM
TELEPHONE MANHOLE
TELEPHONE BARRIER SIGN
TELEPHONE POLE
TRANSFORMER
TREE
TRAFFIC POLE
VENT
WATER METER
WATER MANHOLE
WATER VALVE
YARD LIGHT
OVERHEAD GRADE LINE
OVERHEAD ELECTRIC LINE
OVERHEAD TELEPHONE LINE
BURIED ELECTRIC LINE
BURIED GAS LINE
BURIED FIBER OPTIC LINE
BURIED TELEPHONE LINE
BURIED WATER LINE
BURIED UNKNOWN UTILITY LINE
TOP OF RIM ELEVATION
INVERT ELEVATION
PLASTIC PIPE
REINFORCED CONCRETE PIPE
CLAY PIPE

BENCHMARK DATA

BENCHMARK INFORMATION
(DATUM NAVD 88)

CONTROL BASED ON GPS3 SOLUTION #18-453-03350

BM BASE #100
CAPPED REBAR ON SW SIDE OF MAIN STREET, 400' SOUTH OF ℄ MISSOURI STREET, 3' BEHIND WALK.
ELEV =670.58

AS TBM 1
CHISELED SQUARE ON NORTH CORNER OF YELLOW LIGHT BASE, SOUTHWEST SIDE OF MAIN STREET ACROSS FROM FRISBIE CLOTHIERS.
ELEV =626.08

AS TBM 2
CHISELED "X" ON EAST BOLT OF FIRE HYDRANT, SOUTHWEST SIDE OF MAIN STREET, 400' NORTH OF ℄ MISSOURI STREET.
ELEV =635.18

AS TBM 3
CHISELED SQUARE ON SOUTH CORNER OF TRANS PAD AT NW SIDE OF COLLISEUM PARK PUMP STATION BUILDING.
ELEV =702.22

AS TBM 4
CHISELED "X" ON SOUTHEAST BOLT OF FIRE HYDRANT, NORTHWEST SIDE OF WALLACE AVENUE, ACROSS FROM PEG #3427.
ELEV =695.11

AS TBM 5
CHISELED SQUARE ON WEST CORNER OF TRANS PAD AT NORTHWEST CORNER OF BASEBALL FIELD GRANDSTAND.
ELEV =694.87

UTILITY LEGEND

ELECTRIC / TELECOMMUNICATIONS LINE
WATER LINE
FIRE PROTECTION LINE
ROOF DRAIN LINE
GAS LINE
SANITARY LINE
SEWER STORM SEWER
4" DUAL WALL HDPE PAVEMENT UNDERDRAIN @ 0.25% MIN. SLOPE
GAS METER
ELECTRICAL TRANSFORMER
VALVE
WATER METER PIT
FIRE HYDRANT W/ ASSEMBLY

GENERAL NOTES:

1. CONTRACTOR SHALL PROTECT AND NOT DESTROY THE PROPERTY CORNER MONUMENTS DURING CONSTRUCTION.
2. CONTRACTOR TO VERIFY LOCATION, SIZE AND DEPTH OF EXISTING UTILITIES PRIOR TO COMMENCING ANY CONSTRUCTION. CONTACT ENGINEER IF VARIATION EXISTS.
3. WATER SLIDE INFORMATION IS SHOWN FOR REFERENCE FROM SCHMIDT ASSOCIATES.
4. WATER MAIN IMPROVEMENTS SHOWN PER PLAN BY WESSLER.
5. STORM SEWER AND WALLACE AVENUE IMPROVEMENTS SHOWN PER PLAN BY STRUCTUREPOINT.
6. SEE SHEET C002 GENERAL NOTES FOR MORE INFORMATION.

!! CAUTION !!

THE LOCATIONS OF ALL EXISTING UNDERGROUND UTILITIES SHOWN ON THIS PLAN ARE BASED UPON ABOVE GROUND EVIDENCE (including, but not limited to, manholes, inlets, valves, and marks made upon the ground by others) AND ARE SPECULATIVE IN NATURE. THERE MAY ALSO BE OTHER EXISTING UNDERGROUND UTILITIES FOR WHICH THERE IS NO ABOVE GROUND EVIDENCE OR FOR WHICH NO ABOVE GROUND EVIDENCE WAS OBSERVED. THE EXACT LOCATIONS OF SAID EXISTING UNDERGROUND UTILITIES SHALL BE VERIFIED BY THE CONTRACTOR PRIOR TO ANY AND ALL CONSTRUCTION.

CALL TOLL FREE
"811" OR 1-800-382-5544
– INDIANA UNDERGROUND –

0' 10' 20'
SCALE: 1"=10'

O KEYNOTES

SANITARY SEWER

S1. CONNECT TO PROPOSED BUILDING (REFER TO MEP PLANS FOR CONTINUATION)
S2. 6" PVC SDR-26 SANITARY LATERAL @ 1.04% MIN. SLOPE
S3. SANITARY CLEAN OUT
S4. GREASE INTERCEPTOR/OIL AND GRIT SEPARATOR (COMMERCIAL) PER CITY OF LAFAYETTE DETAILS (REFER TO MEP DRAWINGS)
S5. CONNECT TO EXISTING SANITARY SEWER MAIN

DRAINAGE/STORM SEWER

D1. 12" HDPE PIPE @ 0.25% MIN. SLOPE
D2. STORM CLEANOUT
D3. CONNECT TO PROPOSED BUILDING (REFER TO MEP PLANS FOR CONTINUATION)
D4. CONNECT TO EXISTING STORM STRUCTURE
D5. CONNECT TO PROPOSED STORM STRUCTURE
D6. 4" DUAL WALL HDPE PAVEMENT UNDERDRAIN @ 0.25% MIN. SLOPE
D7. 8" HDPE PIPE @ 1.0% MIN. SLOPE
D8. 6" HDPE PIPE @ 1.00% MIN. SLOPE
D9. CONNECT TO PROPOSED DOWNSPOUT BOOT BELOW GRADE (REFER TO ARCHITECTURAL PLANS FOR CONTINUATION)
D10. 6" HDPE PIPE AT 0.5% MIN. SLOPE
D11. 8" X 8" X 4" TEE (REFER TO MEP PLANS FOR CASING DETAILS)
D12. CONNECT TO PROPOSED UNDERDRAIN SYSTEM (REFER TO FIELD TURF SPECS)
D13. 6" ECONODRAIN SERIES @6 TRENCH DRAIN

WATERLINE

W1. FIRE DEPARTMENT CONNECTION
W2. 4" WATER SERVICE LINE
W3. 8" C900 PVC WATER LINE
W4. PIV
W5. TEE WITH THRUST BLOCKS
W6. BEND WITH THRUST BLOCKS
W7. CONNECT TO EXISTING WATER SERVICE LINE STUB-OUT
W8. CONNECT TO PROPOSED BUILDING (REFER TO MEP PLANS FOR CONTINUATION)

GAS

G1. GAS METER (REFER TO MEP PLANS FOR CONTINUATION.
G2. PROPOSED GAS SERVICE LINE
G3. CONNECT TO EXISTING GAS LINE (COORDINATE WITH UTILITY PROVIDER)

ELECTRIC / TELEPHONE / CABLE

E1. TRANSFORMER PAD (PER UTILITY STANDARDS
E2. ELECTRIC / TELEPHONE / CABLE SERVICE LINE
E3. CONNECT TO PROPOSED TRANSFORMER (COORDINATE WITH LOCAL UTILITY FOR PRIMARY SERVICE TO THE TRANSFORMER)
E4. CONNECT TO BUILDING (REFER TO MEP PLANS FOR CONTINUATION)
E5. CONNECT TO EXISTING ELECTRIC LINE
E6. PROPOSED RELOCATED TELEPHONE HANDHOLE
E7. CONNECT TO EXISTING TELEPHONE LINE

FIBER OPTIC

F1. CONNECT TO PROPOSED BUILDING (REFER TO MEP PLANS FOR CONTINUATION)
F2. PROPOSED FIBER OPTIC SERVICE LINE
F3. CONNECT TO RELOCATED FIBER OPTIC LINE (COORDINATE WITH UTILITY PROVIDER)
F4. CONNECT TO EXISTING FIBER OPTIC LINE (COORDINATE WITH UTILITY PROVIDER)
F5. PROPOSED RELOCATED FIBER OPTIC LINE (REFER TO ZAYO PLANS FOR EXACT LOCATION)

MISCELLANEOUS

M1. POTENTIAL UTILITY CONFLICT (ALL WATER/SANITARY/STORM CROSSINGS TO HAVE A MINIMUM OF 18" VERTICAL CLEARANCE. CONTACT ENGINEER IF CONFLICTS EXIST. RELOCATE EXISTING UTILITIES AS REQUIRED.
M2. CONTRACTOR TO FIELD VERIFY LOCATION, DEPTH AND SIZE OF EXISTING UTILITIES TO ENSURE CONFLICTS DO NOT EXIST WITH PROPOSED UTILITIES.
M3. PROPOSED UTILITY CROSSING (ALL WATER/SANITARY/STORM CROSSINGS TO HAVE A MINIMUM OF 18" VERTICAL CLEARANCE. CONTACT ENGINEER IF CONFLICTS EXIST. RELOCATE EXISTING UTILITIES AS REQUIRED.

UTILITY CONTACTS

UTILITY	COMPANY	CONTACT	PHONE NO.
CABLE TELEVISION	COMCAST	JERRY SHUTTERS	(765) 400-5635
ELECTRIC	DUKE	BEN DAVIS	(765) 446-4052
GAS	VECTREN	STEVEN HINTON	(765) 448-5810
SANITARY SEWER	CITY OF LAFAYETTE	PETE CORBIN JR.	(765) 807-1500
TELEPHONE	FRONTIER COMMUNICATIONS	MIKE BOESINGER	(765) 423-3288
WATER	CITY OF LAFAYETTE	STEVE MOORE	(765) 807-1713

CITY OF LAFAYETTE
20 N. 6TH STREET
LAFAYETTE, IN. 47901
CONTACT: Jeremy Gressel

AMERICAN STRUCTUREPOINT INC.
7260 Shadeland Station | Indianapolis, Indiana 46256
TEL 317.543.5580 | FAX 317.543.5579
www.structurepoint.com

LOEB STADIUM

Main Street &
Wallace Avenue
City of Lafayette, Indiana

BRANDY N. SCHMIDT
REGISTERED
No. 11100062
STATE OF INDIANA
PROFESSIONAL ENGINEER

CERTIFIED BY

ISSUANCE INDEX
DATE:
06/12/2019
PROJECT PHASE:
CONSTRUCTION SET

REVISION SCHEDULE		
NO.	DESCRIPTION	DATE
1	ASI001	09/14/17
2	RFI 043	10/25/19
3	RFI 034	11/21/19
4	REV 4 ASI002	01/08/20
5	PR007	02/03/20

Project Number 2015.02410

STADIUM SEATING DRAINAGE

C405

J. R. KELLY COMPANY
GENERAL CONTRACTORS

March 2, 2020

Kettelhut Construction Inc.
740 Sagamore Parkway South
Lafayette, IN 47905

Attn: Alex Gonzalez

Re: PR #007 (Field Drainage Changes) Proposal
Loeb Stadium – General Trades

J.R. Kelly Company is pleased to provide pricing associated with the changes shown in PR #007 (as described and noted on the attached documents). According to our previous discussions we are including the new underdrains at the batting cage and both bullpens along with the underground piping for the field terrace area. We have not included the actual drains for the field terrace area (during discussions the drains were assigned to DA Dodd). The cost associated with this work is:

R&W Contracting	$5,159
JR Kelly 5% OH&P	$258
Bond	$54
TOTAL LUMP COST FOR CHANGE ...	**$5,471**

Our proposal is valid for 30 days. Please issue a Change Order for this work if you would like for us to incorporate this change into our work. If you have any questions or need additional information please contact our office at your earliest convenience. Thank you for the opportunity to work with you on this project.

Sincerely,

Robert Mutzl P.E.
Executive VP

Attachment: R&W Proposal and PR 7 with Notes

(765) 772-3991 FAX (765) 772-3996
3450 CONCORD ROAD LAFAYETTE, IN 47909

Request for Change - Loeb Stadium

To: 2/28/2020
Rob Mutzl
JR Kelly Company

From:
R&W Contracting, Inc.
3131 Klondike Road
West Lafayette, IN 47906
765-499-9390

PR 07 - Batting Cage Underdrain / Field Terrace Drainage / Bull Pen Underdrains

Description	Rate	Quantity			Total
Komatsu PC 78	75	8	HR		600
Takehuci TL 10	70	8	HR		560
Superintendent	70	8	HR		560
Operator	60	16	HR		960
Laborer	50	8	HR		400
8" HDPE N-12 Dual Wall	2.3	47	LF		108
4" HDPE N-12 Dual Wall	1.2	216	LF		259
18" Repair Coupler	32	2	EA		64
18"x4" HDPE Tee	125	2	EA		250
8"x4" HDPE Tee	67	3	EA		201
8" 90° HDPE Elbow	31	1	EA		31
8" 45° HDPE Elbow	31	1	EA		31
4" 45° HDPE Elbow	12	3	EA		36
#8 Stone (Delivered)	15.75	40	TN		630
Subtotal				$	4,690
P&OH (10%)				$	469
Total				**$**	**5,159**

R & W CONTRACTING INC
3131 KLONDIKE ROAD
WEST LAFAYETTE, IN

47906

TEAM EJP Lafayette, IN.
400 Hamman Street
Lafayette, IN

47905

Telephone: 765-449-2723

2/28/20 Bid ID: 5418163 LOEB DUAL WALL FITTINGS

Quantity	Sell Per	Description	Unit Price	Extended Price
20	FT	8 ADS N12 PIPE SOIL-TITE	2.30	46.00
20	FT	4 ADS N12 PIPE SOIL-TITE	1.20	24.00
1	EA	18X4 ADS N12 TEE	125.00	125.00
1	EA	8X4 ADS N12 TEE WYE SOIL-TITE 8" X 4" ADS N-12 TEE	67.00	67.00
1	EA	8 ADS N12 90 ELBOW SOIL-TITE 8" ADS N-12 BEND 90	31.00	31.00
1	EA	8 ADS N12 45 BEND SOIL-TITE	31.00	31.00
1	EA	4 ADS N12 45 ELBOW SOIL-TITE 4" ADS N-12 BEND 45	12.00	12.00
1	EA	18 ADS SPLIT COUPLER	32.45	32.45

Subtotal:	368.45
Tax:	.00
Bid Total:	368.45

KETTELHUT CONSTRUCTION, INC. General Contractor/Construction Manager

740 Sagamore Parkway South
Lafayette, IN 47905
(765) 447-2181
Fax (765) 447-7122

March 17, 2020

Mr. Dan McCloskey
American Structurepoint, Inc.
9025 River Road, Suite 200
Indianapolis, IN 46240

Re: Loeb Stadium Renovation
Lafayette, Indiana
Kettelhut Project No. 6617

Gentlemen:

Enclosed please find cost documentation from applicable Contractors regarding Proposal Request No. 008, as it pertains to hardware changes. We have yet to receive responses from Contractors labeled N/R, but do not anticipate any other costs or credits than those shown below.

1.	BP #1 – General Trades	JR Kelly Co., Inc.	<$ 2,788.00>
2.	BP #2 – Masonry	James Scharer Masonry, Inc.	N/R
3.	BP #3 – Steel	Almet, Inc.	N/R
4.	BP #4 – Roofing	Horning Roofing & Sheet Metal Co., LLC	N/R
5.	BP #5 – Alum.	Central Indiana Glass & Glazing, Inc.	<$ 198.00>
6.	BP #6 – Fire Sprinklers	Dalmatian Fire, Division of Shambaugh & Son, L.P.	N/R
7.	BP #7 – Mechanical	D. A. Dodd, LLC	N/R
8.	BP #8 – Electrical	Huston Electric, Inc.	<$ 1,049.00>
9.	BP #9 – Sports Lighting	Custer Electric, Inc.	N/R
10.	BP #10 – Scoreboard		
11.	BP #11 – Turf	Sprinturf, Inc.	N/R
12.	BP #12 – Stadium Seat	Irwin Seating Company	N/R
13.	BP #13 – Food Service	C&T Design & Equipment Co.	N/R
			<$ 4,035.00>

After your review, if this cost data is approved by your firm and the Owner, please advise in order for a Change Order to be initiated.

Sincerely,

KETTELHUT CONSTRUCTION, INC.

D. Alex Gonzalez
Executive Vice President

DAG: jas

Enclosure

cc: Field Office
City of Lafayette w/enclosure
Field Order 6617.042

J.R. KELLY COMPANY
GENERAL CONTRACTORS

March 2, 2020

Kettelhut Construction Inc.
740 Sagamore Parkway South
Lafayette, IN 47905

Attn: Alex Gonzalez

Re: PR #008 (Door Hardware Changes) Proposal
Loeb Stadium – General Trades

J.R. Kelly Company is pleased to provide pricing associated with the changes shown in PR #008 (as described and noted on the attached documents). According to your email clarification this morning the intent for the G001, G002 and G003 gates (that show electronic access hardware on the revised hardware specifications) is for the single Card Reader included for Gate 004 to operate all four gates simultaneously. Please also note that the changes to the hardware for doors 010B, 011B, 012A and 018A were all provided and accepted under PR 005 and thus are not included in this pricing. As a last note, all electrical wiring for the card readers and access system are to be included in the electrical contractor's scope. Thus Huston Electric should be providing pricing for any electrical work associated with the changes and is not included in our pricing. The cost associated with the work described in the PR is:

Mulhaupts	($2,760)
Bond	($28)
TOTAL LUMP DEDUCT FOR CHANGE …	**$2,788**

Our proposal is valid for 30 days. Please issue a Change Order for this work if you would like for us to incorporate this change into our work. If you have any questions or need additional information please contact our office at your earliest convenience. Thank you for the opportunity to work with you on this project.

Sincerely,

Robert Mutzl P.E.
Executive VP

Attachment: Mulhaupt's Proposal

(765) 772-3991 FAX (765) 772-3996
3450 CONCORD ROAD LAFAYETTE, IN 47909

8227 Northwest Blvd. #270
Indianapolis, IN 46278

Phone: (317) 228-9470
Fax: (317) 228-9479

209 North 5th Street
Lafayette, IN 47901

Phone: (765) 423-2610
Fax: (765) 423-2622

Mulhaupt's
INCORPORATED

FOUNDED 1876

"Today's Innovators for Tomorrow's Solutions"

Date: February 13, 2020
To: J.R. Kelly Company Inc
Attention: Rob Mutzl
Project: 19114 Loeb Stadium
Reference: Change Order – PR# 008
Quoted by: Richard Woodhead – 765-807-5908 – richardw@mulhaupts.com

The following changes may result in an add or deduct to the contract amount of this project. These prices do not include sales tax unless listed separately below and are F.O.B. jobsite. Pricing valid for 60 days. Price excludes installation, glass & glazing. No material will be ordered until a signed copy of this change request is received by this office.

Changes included in this price quotation:

1) Change doors 002 and 004 to passage set vs. card access.
DEDUCT: <$1,140.00>

2) Doors 010B and 011B change to push pulls.
DEDUCT GIVEN AND TAKEN UNDER PR# 5

3) Change doors 002A and 113 to keyed lockset vs. card access.
DEDUCT: <$1,080.00>

4) Change doors 012A and 018A to keyed lockset vs. card access.
DEDUCT GIVEN AND TAKEN UNDER PR# 5

5) Deduct at opening 201B and 213B to card reader only.
DEDUCT: <$216.00>

6) Deduct at openings G001, G002, and G003 to card reader only.
DEDUCT: <$324.00>

TOTAL = ($2,760) ⟶

By signing below and returning this change request, you authorize Mulhaupt's, Inc. to proceed on the above work and agree to the price set above. Note that this will change your contract value accordingly. Please forward your formal change order.

Authorized by: _____ *Title:* _____ *Date:* _____
Signature

KETTELHUT CONSTRUCTION, INC. General Contractor/Construction Manager

740 Sagamore Parkway South
Lafayette, IN 47905
(765) 447-2181
Fax (765) 447-7122

March 2, 2020

Mr. Dan McCloskey
American Structurepoint, Inc.
9025 River Road, Suite 200
Indianapolis, IN 46240

Re: Loeb Stadium Renovation
Lafayette, Indiana
Kettelhut Project No. 6617

Revision #1

Gentlemen:

Enclosed please find cost documentation from applicable Contractors regarding changes to the foul poles as indicated in the response to RFI #70. We have yet to receive responses from Contractors labeled N/R, but do not anticipate any other costs or credits than those shown below.

1.	BP #1 – General Trades	JR Kelly Co., Inc.	$ 987.00
2.	BP #2 – Masonry	James Scharer Masonry, Inc.	N/R
3.	BP #3 – Steel	Almet, Inc.	N/R
4.	BP #4 – Roofing	Horning Roofing & Sheet Metal Co., LLC	N/R
5.	BP #5 – Alum.	Central Indiana Glass & Glazing, Inc.	N/R
6.	BP #6 – Fire Sprinklers	Dalmatian Fire, Division of Shambaugh & Son, L.P.	N/R
7.	BP #7 – Mechanical	D. A. Dodd, LLC	N/R
8.	BP #8 – Electrical	Huston Electric, Inc.	N/R
9.	BP #9 – Sports Lighting	Custer Electric, Inc.	N/R
10.	BP #10 – Scoreboard		
11.	BP #11 – Turf	Sprinturf, Inc.	N/R
12.	BP #12 – Stadium Seat	Irwin Seating Company	N/R
13.	BP #13 – Food Service	C&T Design & Equipment Co.	N/R
			$ 987.00

After your review, if this cost data is approved by your firm and the Owner, please advise in order for a Change Order to be initiated.

Sincerely,

KETTELHUT CONSTRUCTION, INC.

D. Alex Gonzalez
Executive Vice President

DAG: jas

Enclosure

cc: Field Office
City of Lafayette w/enclosure
Field Order 6617.045

J.R. KELLY COMPANY
GENERAL CONTRACTORS

February 24, 2020

Kettelhut Construction Inc.
740 Sagamore Parkway South
Lafayette, IN 47905

Attn: Alex Gonzalez

Re: RFI 70 Foul Pole Changes Proposal - REVISED
Loeb Stadium – General Trades

J.R. Kelly Company is pleased to provide pricing associated with the changes to the foul poles as shown in the answers to RFI #70. The RFI response changed the left field foul pole to being mounted on top of the outfield wall and the right field pole to being mounted to the side of one of the pilasters on top of the outfield wall. These changes require the addition of a pilaster to the left field wall per American Structurepoint detail SSK-001 (ASK-003) ~~and required Sportsfield Specialties to provide custom foul poles~~. The cost associated with this work is:

~~Sportsfield Specialties~~		~~$1,135~~	
Anchor Bolt	-Install	$64	
Add'l Rebar	-Material	$110	
	-Install	$55	
Pilaster Forming	- Material	$160	
	-Labor	$499	
	Subtotal	~~$2,023~~	$888
	10% OH&P	~~$202~~	$89
	Bond	~~$22~~	$10
TOTAL LUMP COST FOR CHANGE ...		**~~$2,247~~**	**$987**

Our proposal is valid for 30 days. Please issue a Change Order for this work if you would like for us to incorporate this change into our work. If you have any questions or need additional information please contact our office at your earliest convenience. Thank you for the opportunity to work with you on this project.

Sincerely,

Robert Mutzl P.E.
Executive VP

Attachment: Back-up Proposals

(765) 772-3991 FAX (765) 772-3996
3450 CONCORD ROAD LAFAYETTE, IN 47909

Carter-Water South Bend, IN
910 W. Ireland Road
South Bend, IN 46614
(574) 231-9000

Rebar Quote

Project Name:	Loeb Stadium - Extra Wall Pilaster
Project Location:	Lafayette, IN
Pages Used For Estimate:	SSK-001
Drawings Dated:	1/22/2020
Addendums:	

Quote Date:	2/11/2020
Bid Date:	2/11/2020
Quote #:	20-061

Any additional waivers of subrogation or additional insured status may result in additional fees/costs not included on this quote. If a supply bond is requested, the cost will be billed to the contractor. Sales tax is NOT included in this quote. Freight charges may apply. Terms are NET 30.

This Quotation will expire **30 days** from Quote Date.

Base Bid:

	Quantity	Unit		Ext. Price
Building Foundations:		Tons		
Includes -				
Total Net Price:				
	Quantity	**Unit**		**Ext. Price**
Masonry:		Tons		
Includes -	N/A			
Total Net Price:				
	Quantity	**Unit**		**Ext. Price**
Site Work:	200	Pounds	$	110.00
Includes -	Pier Verticals & Pier Ties			
Total Net Price:			$	110.00

All rebar quoted above to be delivered in 1 truckload.
Any additional loads may be subject to a minimum of $100.00 shipping charge.

AMERICAN STRUCTUREPOINT INC.

SSK-001
PAGE: 1 OF 1

DATE: 01/22/2020
BY: DAB
RE: 2015.02410 LOEB STADIUM

FOUL POLE BASE PILASTER

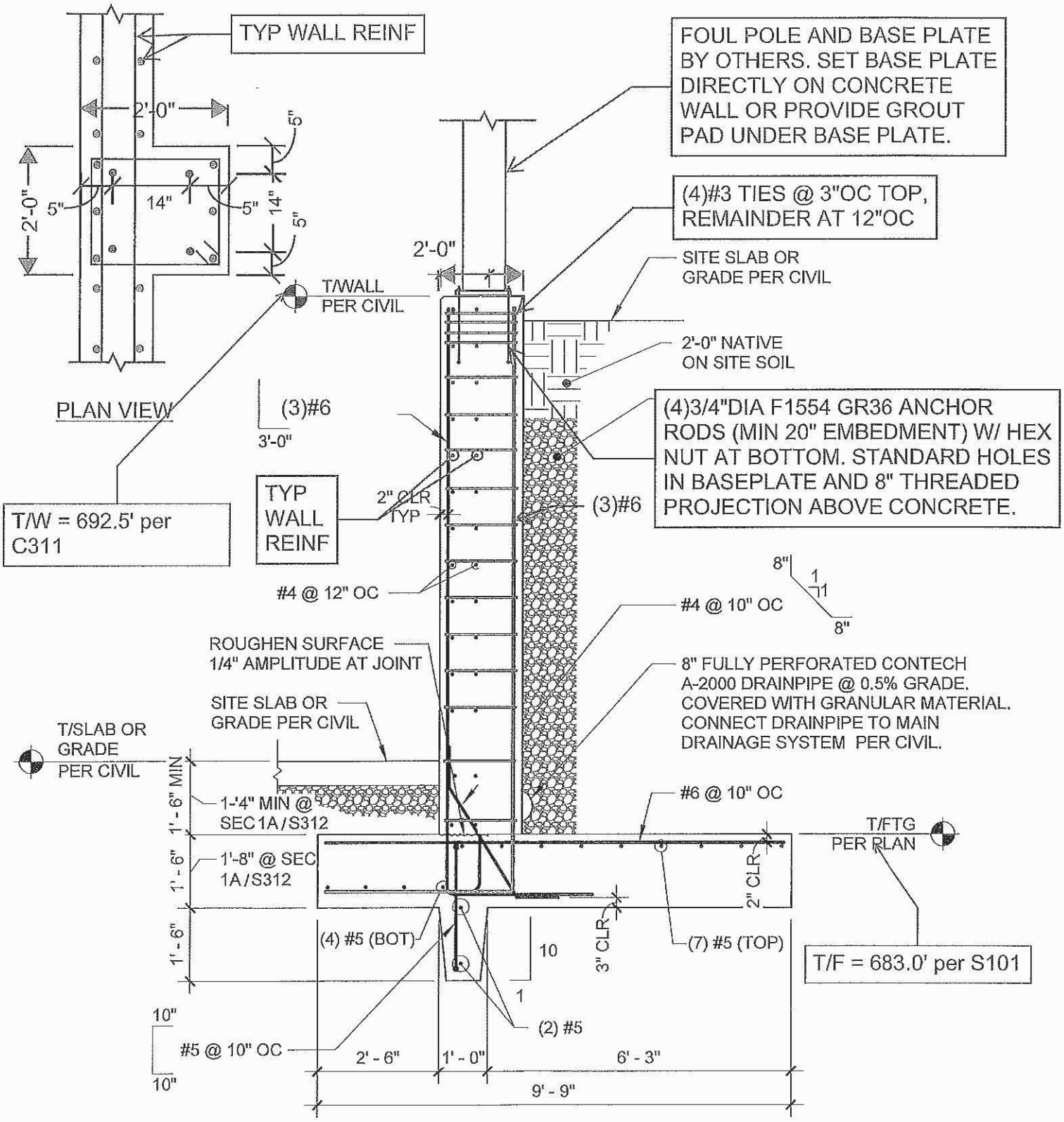

RETAINING WALL SECTION

1A / S312 — 1 / S312

N.T.S.

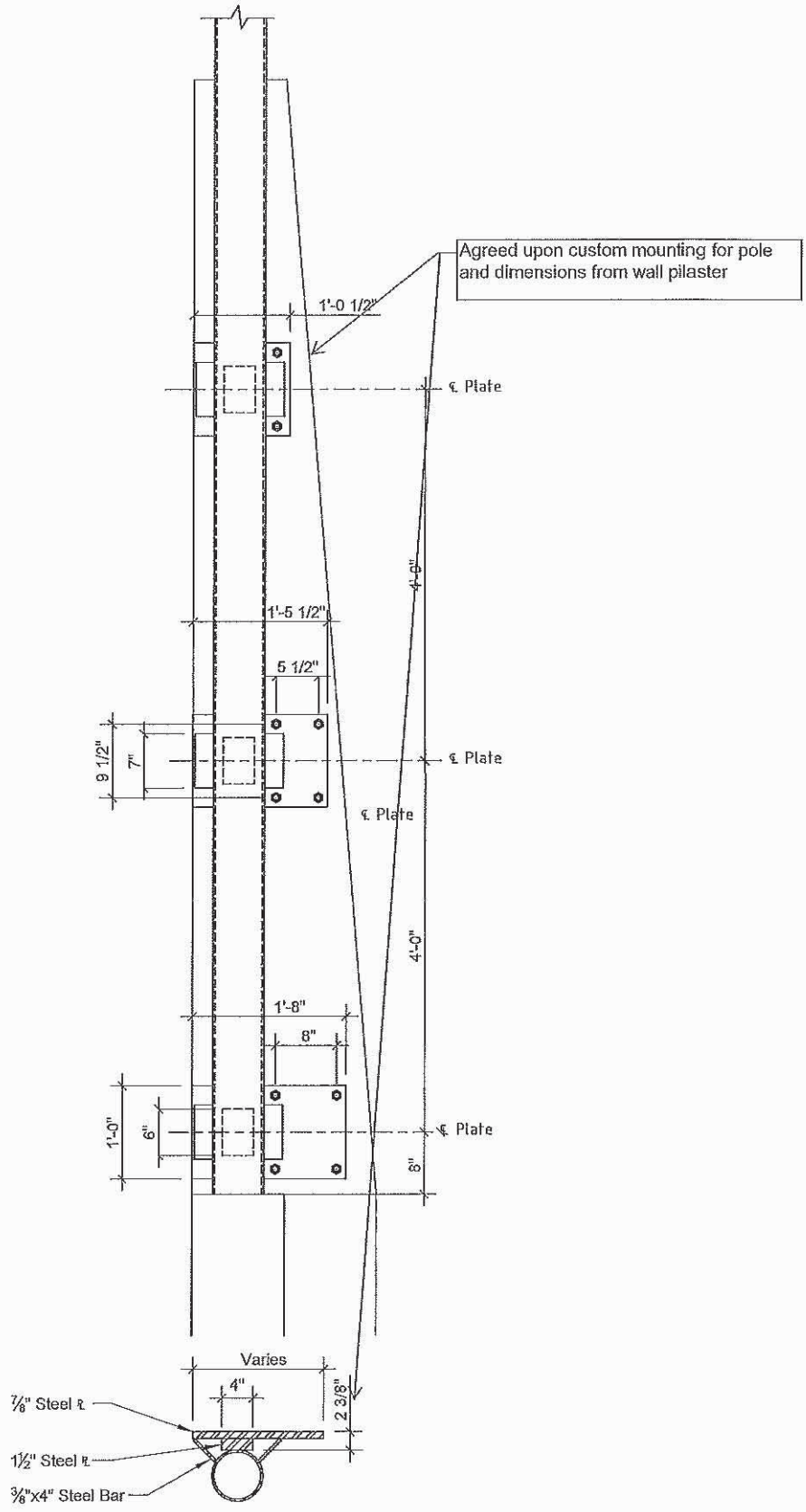
Agreed upon custom mounting for pole and dimensions from wall pilaster
1'-0 1/2"
℄ Plate
4'-0"
1'-5 1/2"
5 1/2"
9 1/2"
7"
℄ Plate
℄ Plate
4'-0"
1'-8"
8"
1'-0"
6"
℄ Plate
8"
Varies
4"
2 3/8"
7/8" Steel ℄
1½" Steel ℄
3/8"x4" Steel Bar

Approved by the Board of Public Works and Safety on the _____day of _____, 2020.

_____
Gary Henriott, President

_____
Cindy Murray, member

_____
Norm Childress, member

_____
Ronald Shriner, member

_____
Amy Moulton, member

ATTEST:

_____
Mindy Miller, Deputy Clerk

Date: _____

CHANGE ORDER

CONSTRUCTION MANAGER-ADVISER EDITION

Owner	☐
Construction Manager	☐
Architect	☐
Contractor	☐
Field	☐
Other	☐

PROJECT: *(Name and address)*	**Loeb Stadium** **Main Street and Wallace Street** **Lafayette, Indiana**	CHANGE ORDER NO.:	**BP-5-1**
		INITIATION DATE:	**March 26, 20202**
TO CONTRACTOR: *(Name and address)*	**Central Indiana Glass & Glazing, Inc.** **707 Farabee Court** **Lafayette, IN 47905-5919**	PROJECT NOS.:	**6617**
		CONTRACT FOR:	**BP #5 - Alum. Ent. / Storefronts**
		CONTRACT DATE:	**June 4, 2019**

The Contract is changed as follows:

6617.042 - American Structurepoint Proposal Request #8, as it pertains to door hardware changes **Deduct** **-$198.00**

Not valid until signed by the Owner, Construction Manager, Architect and Contractor.

The original (Contract Sum) (Guaranteed Maximum Price) was	**$**	**547,060.00**
Net change by previously authorized Change Orders	**$**	**0.00**
The (Contract Sum) (~~Guaranteed Maximum Price~~) prior to this Change Order was	**$**	**0.00**
The (Contract Sum) (~~Guaranteed Maximum Price~~) will be (~~increased~~) (decreased~~)~~ (~~unchanged~~) by this Change Order	**$**	**-198.00**
The new (Contract Sum) (~~Guaranteed Maximum Price~~) including this Change Order will be	**$**	**546,862.00**
The Contract Time will be (~~increased~~) (~~decreased~~) (unchanged) by		**(0) days**
The dated of Substantial Completion as of the date of this Change Order therefore is		**Unchanged**

NOTE: This summary does not reflect changes in the Contract Sum, Contract Time or Guaranteed Maximum Price which have been authorized by Construction Change Directive.

Kettelhut Construction, Inc.
CONSTRUCTION MANAGER

740 Sagamore Parkway S., Lafayette, IN 47905
ADDRESS

BY 03/30/2020 DATE

American Structurepoint, Inc.
ARCHITECT

9025 River Road, Indianapolis, IN 46240
ADDRESS

BY 03.30.2020 DATE

Central Indiana Glass & Glazing, Inc.
CONTRACTOR

707 Farabee Court, Lafayette, IN 47905-5919
ADDRESS

BY 3-30-2020 DATE
Shawn Hammond

City of Lafayette, Indiana Board Public Works and Safety
OWNER

20 North 6th Street, Lafayette, IN 47901
ADDRESS

BY 4/16/2020 DATE

KETTELHUT CONSTRUCTION, INC. General Contractor/Construction Manager

740 Sagamore Parkway South
Lafayette, IN 47905
(765) 447-2181
Fax (765) 447-7122

March 17, 2020

Mr. Dan McCloskey
American Structurepoint, Inc.
9025 River Road, Suite 200
Indianapolis, IN 46240

Re: Loeb Stadium Renovation
Lafayette, Indiana
Kettelhut Project No. 6617

Gentlemen:

Enclosed please find cost documentation from applicable Contractors regarding Proposal Request No. 008, as it pertains to hardware changes. We have yet to receive responses from Contractors labeled N/R, but do not anticipate any other costs or credits than those shown below.

1.	BP #1 – General Trades	JR Kelly Co., Inc.	<$ 2,788.00>
2.	BP #2 – Masonry	James Scharer Masonry, Inc.	N/R
3.	BP #3 – Steel	Almet, Inc.	N/R
4.	BP #4 – Roofing	Horning Roofing & Sheet Metal Co., LLC	N/R
5.	BP #5 – Alum.	Central Indiana Glass & Glazing, Inc.	<$ 198.00>
6.	BP #6 – Fire Sprinklers	Dalmatian Fire, Division of Shambaugh & Son, LP	N/R
7.	BP #7 – Mechanical	D. A. Dodd, LLC	N/R
8.	BP #8 – Electrical	Huston Electric, Inc.	<$ 1,049.00>
9.	BP #9 – Sports Lighting	Custer Electric, Inc.	N/R
10.	BP #10 – Scoreboard		
11.	BP #11 – Turf	Sprinturf, Inc.	N/R
12.	BP #12 – Stadium Seat	Irwin Seating Company	N/R
13.	BP #13 – Food Service	C&T Design & Equipment Co.	N/R
			<$ 4,035.00>

After your review, if this cost data is approved by your firm and the Owner, please advise in order for a Change Order to be initiated.

Sincerely,

KETTELHUT CONSTRUCTION, INC.

D. Alex Gonzalez
Executive Vice President

DAG: jas

Enclosure

cc: Field Office
City of Lafayette w/enclosure
Field Order 6617.042

Alex Gonzalez

From: Shawn Hammond <shammond@cinglass.com>
Sent: Thursday, February 13, 2020 9:33 AM
To: Alex Gonzalez
Cc: Steve Julian; Mary Brown
Subject: RE: [Loeb Stadium] New file uploaded to docunet.us

Categories: 6617 Loeb Stadium

Good morning Alex,

Please DEDUCT $198.00 for hardware changes to aluminum doors per PR No. 008.

If you have any questions or need anything further, please let me know.

Thank you!

Shawn Hammond | Project Manager
P: 765-449-8858 | F: 765-449-8952 | C: 765-418-4000
Email: shammond@cinglass.com

Central Indiana Glass & Glazing, Inc.
707 Farabee Court – Lafayette, IN 47905
Architectural Glazing Contractor
www.cinglass.com

Be sure to Like us on Facebook!

From: Alex Gonzalez <dag@kettelhut.com>
Sent: Friday, February 07, 2020 12:06 PM
To: BradyM@hustonelectric.com; Brandon Fromm <bfromm@horningroofing.com>; Brett Sanders <brettsanders@dadodd.com>; 'brettb@hustonelectric.com' <brettb@hustonelectric.com>; Cody Colagrande <ccolagrande@sprinturf.com>; Craig Custer <ccuster@custerelectric.com>; Dale Stewart <dstewart@almetinc.com>; Dave Britton <britton07@gmail.com>; George Adamaitis <georgea@dalmatianfire.net>; James Scharer (James88888@frontier.com) <James88888@frontier.com>; Jon Ryder <jryder@c-tdesign.com>; Rob Mutzl <rob@jrkellyco.com>; Robby Robinson <robbyjrkellyco@gmail.com>; Ryan Kent <ryan.kent@irwinseating.com>; Shawn Hammond <shammond@cinglass.com>; Steve Julian <sjulian@cinglass.com>
Cc: Logan R. Brown <LRB@kettelhut.com>; Mark Weiand <MAW@kettelhut.com>
Subject: FW: [Loeb Stadium] New file uploaded to docunet.us

Listed below is American Structure Point Proposal Request #008 for your use in determining cost and/or scheduling modifications required to perform the proposed revisions. Please forward your response for scope of work modifications to our firm no later than February 14, 2020.

CHANGE ORDER

CONSTRUCTION MANAGER-ADVISER EDITION

Owner	☐
Construction Manager	☐
Architect	☐
Contractor	☐
Field	☐
Other	☐

PROJECT: *(Name and address)*
Loeb Stadium
Main Street and Wallace Street
Lafayette, Indiana

TO CONTRACTOR: *(Name and address)*
D. A. Dodd, LLC
3416 Rascal Drive
Lafayette, IN 47909

CHANGE ORDER NO.: **BP-7-2**

INITIATION DATE: **March 26, 2020**

PROJECT NOS.: **6617**

CONTRACT FOR: **BP #7 - Mechanical**

CONTRACT DATE: **June 4, 2019**

The Contract is changed as follows:

6617.019 - American Structurepoints PR3 in regards to water supply lines with approved backflow.	**Add**	**$43,468.00 - CP-3**
6617.036 - American Structurepoints PR6 in regards to the press level drainage modifications.	**Add**	**$20,067.00 - CP-7**
6617.040 - American Structurepoint Proposal Request #7, as it pertains to field level drainage.	**Add**	**$308.00 - CP-8**
	TOTAL	**$63,843.00**

Not valid until signed by the Owner, Construction Manager, Architect and Contractor.

The original (Contract Sum) (~~Guaranteed Maximum Price~~) was	**$**	**1,749,000.00**
Net change by previously authorized Change Orders	**$**	**-7,088.00**
The (Contract Sum) (~~Guaranteed Maximum Price~~) prior to this Change Order was	**$**	**1,741,912.00**
The (Contract Sum) (Guaranteed Maximum Price) will be (increased) (~~decreased~~) (~~unchanged~~) by this Change Order	**$**	**63,843.00**
The new (Contract Sum) (~~Guaranteed Maximum Price~~) including this Change Order will be	**$**	**1,805,755.00**
The Contract Time will be (~~increased~~) (~~decreased~~) (unchanged) by		**(0) days**
The dated of Substantial Completion as of the date of this Change Order therefore is		**Unchanged**

NOTE: This summary does not reflect changes in the Contract Sum, Contract Time or Guaranteed Maximum Price which have been authorized by Construction Change Directive.

Kettelhut Construction, Inc.
CONSTRUCTION MANAGER

740 Sagamore Parkway S., Lafayette, IN 47905
ADDRESS

BY 03/30/2020 DATE

American Structurepoint, Inc.
ARCHITECT

9025 River Road, Indianapolis, IN 46240
ADDRESS

BY 03.30.2020 DATE

D. A. Dodd, LLC
CONTRACTOR

3416 Rascal Drive, Lafayette, IN 47909
ADDRESS

BY 3-30-20 DATE

City of Lafayette, Indiana Board Public Works and Safety
OWNER

20 North 6th Street, Lafayette, IN 47901
ADDRESS

BY 4/16/2020 DATE

KETTELHUT CONSTRUCTION, INC. General Contractor/Construction Manager

740 Sagamore Parkway South
Lafayette, IN 47905
(765) 447-2181
Fax (765) 447-7122

January 16, 2020

Mr. Dan McCloskey
American Structurepoint, Inc.
9025 River Road, Suite 200
Indianapolis, IN 46240

Re: Loeb Stadium Renovation
Lafayette, Indiana
Kettelhut Project No. 6617

Gentlemen:

Enclosed please find cost documentation from applicable Contractors regarding American Structurepoint Proposal Request No. 003, as it pertains to adding water supply lines with approved backflow devices. We have yet to receive responses from Contractors labeled N/R, but do not anticipate any other costs or credits than those shown below.

1.	BP #1 – General Trades	JR Kelly Co., Inc.	N/R
2.	BP #2 – Masonry	James Scharer Masonry, Inc.	N/R
3.	BP #3 – Steel	Almet, Inc.	N/R
4.	BP #4 – Roofing	Horning Roofing & Sheet Metal Co., LLC	N/R
5.	BP #5 – Alum.	Central Indiana Glass & Glazing, Inc.	N/R
6.	BP #6 – Fire Sprinklers	Dalmatian Fire, Division of Shambaugh & Son, L.P.	N/R
7.	BP #7 – Mechanical	D. A. Dodd, LLC	$ 43,468.00
8.	BP #8 – Electrical	Huston Electric, Inc.	N/R
9.	BP #9 – Sports Lighting	Custer Electric, Inc.	N/R
10.	BP #10 – Scoreboard		
11.	BP #11 – Turf	Sprinturf, Inc.	N/R
12.	BP #12 – Stadium Seat	Irwin Seating Company	N/R
13.	BP #13 – Food Service	C&T Design & Equipment Co.	N/R
			$ 43,468.00

After your review, if this cost data is approved by your firm and the Owner, please advise in order for a Change Order to be initiated.

Sincerely,

KETTELHUT CONSTRUCTION, INC.

D. Alex Gonzalez
Executive Vice President

DAG: jas

Enclosure

cc: Field Office
City of Lafayette w/enclosure
Field Order 6617.019

AMERICAN STRUCTUREPOINT INC.

7260 Shadeland Station, Indianapolis, Indiana 46256
TEL 317.547.5580 FAX 317.543.0270

www.structurepoint.com

Proposal Request No. 003

Project Name: Loeb Stadium
Project Number: 2015.02410
Date: 09/09/2019

OWNER:
City of Lafayette, Indiana – Board of Public Works and Safety
20 North 6th Street
Lafayette, IN 47901

ARCHITECT / STRUCTURAL ENGINEER / CIVIL ENGINEER
American Structurepoint, Inc.
9025 River Road, Suite 200
Indianapolis, Indiana 46240
317.547.5580

MECHANICAL / PLUMBING / ELECTRICAL ENGINEER
Applied Engineering Services, Inc.
5975 Castle Creek Parkway N Drive, Suite 300
Indianapolis, IN 46250
317.810.4141

This Proposal Request is for informational and pricing purposes only and shall not be interpreted as instruction to perform the proposed Work indicated herein. Contractor shall detail all costs associated with the Work, itemized at a minimum by labor, material, overhead and profit. Specify whether the change in Work is an ADD, DEDUCT or NO CHANGE to the contract. After receiving pricing, the Architect shall direct the Contractor regarding how to proceed. If, and only if, the Work outlined in this Proposal Request causes no change in Contract sum or time, the Contractor may then proceed with the Work listed herein, at which point, said Work shall become part of the Contract Documents and modify the original Contract Documents and all prior changes as applicable. Requirements of the original Contract Documents and previous changes remain in effect except as modified by this Proposal Request.

The extent of this Proposal Request is as follows:

DOCUMENT MODIFICATIONS
PROJECT MANUAL
A. No Change

DRAWINGS
A. See clouded revisions on the attached drawings.
   1. Sheets P300.C; P301.A; P302.A; P302.C AND P303.B:
      ADD water supply lines with approved backflow devices, move floor drains, move floor sinks, change some floor drains to floor sinks and add open site drains.

END OF PROPOSAL REQUEST.

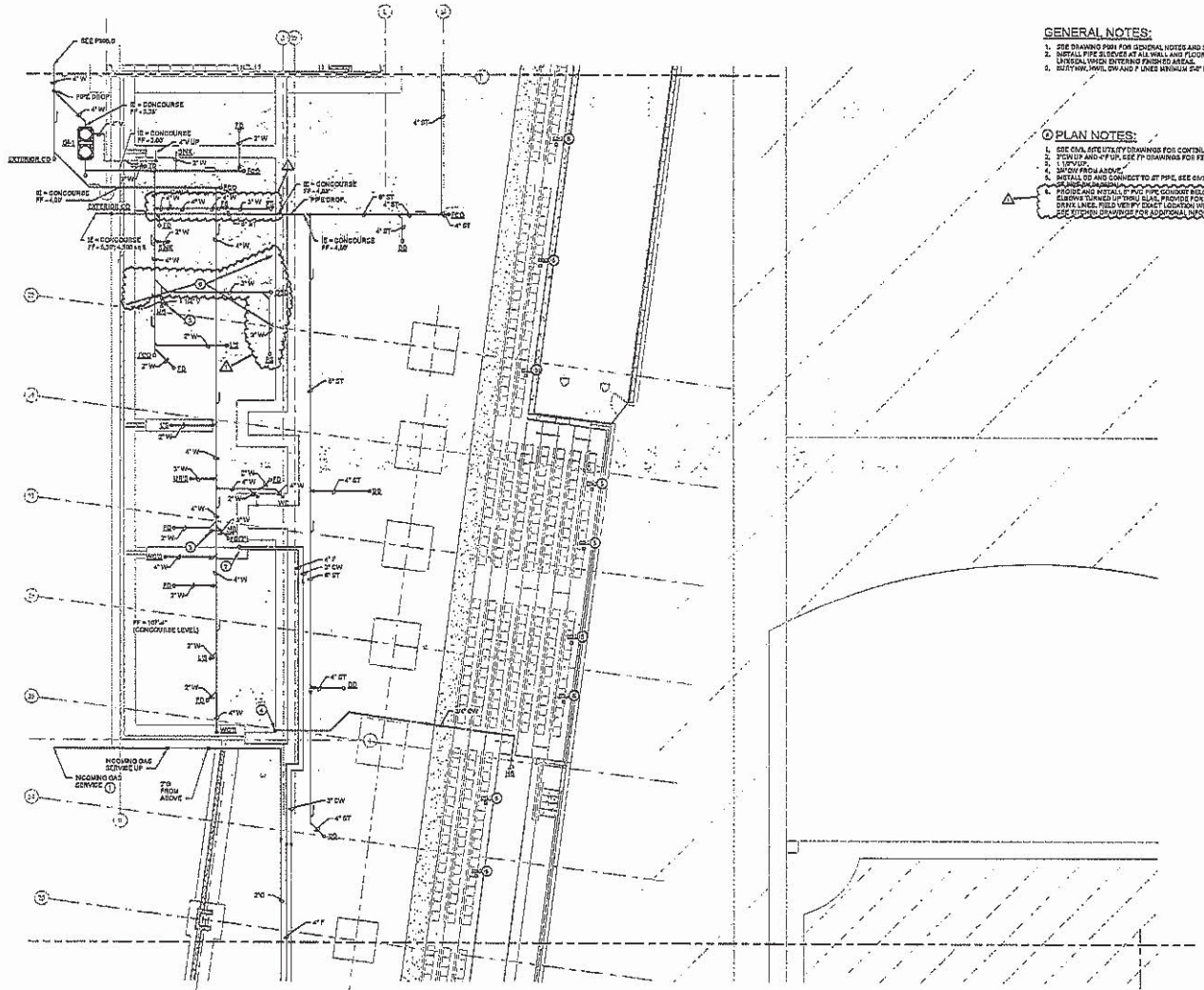

FOUNDATION PLUMBING PLAN - UNIT C

Scale: 1/8" = 1'-0"

GENERAL NOTES:

1. SEE DRAWING P001 FOR GENERAL NOTES AND SYMBOLS.
2. INSTALL PIPE SLEEVES AT ALL WALL AND FLOOR PENETRATIONS. INSTALL UNIVERSAL WHEN ENTERING FINISHED AREAS.
3. BURY HW, HWR, CW AND P LINES MINIMUM 3'-6" BELOW GRADE.

PLAN NOTES:

1. SEE CIVIL SITE UTILITY DRAWINGS FOR CONTINUATION.
2. 3"CW UP AND 4"F UP. SEE FP DRAWINGS FOR FIRE LINE CONTINUATION.
3. 1 1/2"VUP.
4. 3/4"CW FROM ABOVE.
5. INSTALL CO AND CONNECT TO ST PIPE. SEE CIVIL SITE UTILITY/STORM DRAWINGS
6. PROVIDE AND INSTALL 3" PVC PIPE CONDUIT BELOW SLAB AND WITH LONG SWEEP ELBOWS TURNED UP THRU SLAB. PROVIDE FOR BEER AND SODA CARBONATED DRINK LINES. FIELD VERIFY EXACT LOCATION WITH SUPPLIERS AND VENDORS. SEE KITCHEN DRAWINGS FOR ADDITIONAL INFORMATION.

CITY OF LAFAYETTE

AMERICAN STRUCTUREPOINT INC.

Kettelhut CONSTRUCTION, INC.

Applied Engineering Services

REITANO DESIGN GROUP

DESIGN 27 TECHNOLOGY ACOUSTICS

LOEB STADIUM RENOVATION

COLUMBIAN PARK

6/12/19

CERTIFIED BY

ISSUANCE INDEX
DATE:
06.12.19
PROJECT PHASE:
CONSTRUCTION SET

REVISION SCHEDULE		
NO.	DESCRIPTION	DATE
1	PR-003	06/09/2019

Project Number 2015.02410

FOUNDATION PLUMBING PLAN - UNIT C

P300.C

9/10/2019 11:30:45 PM

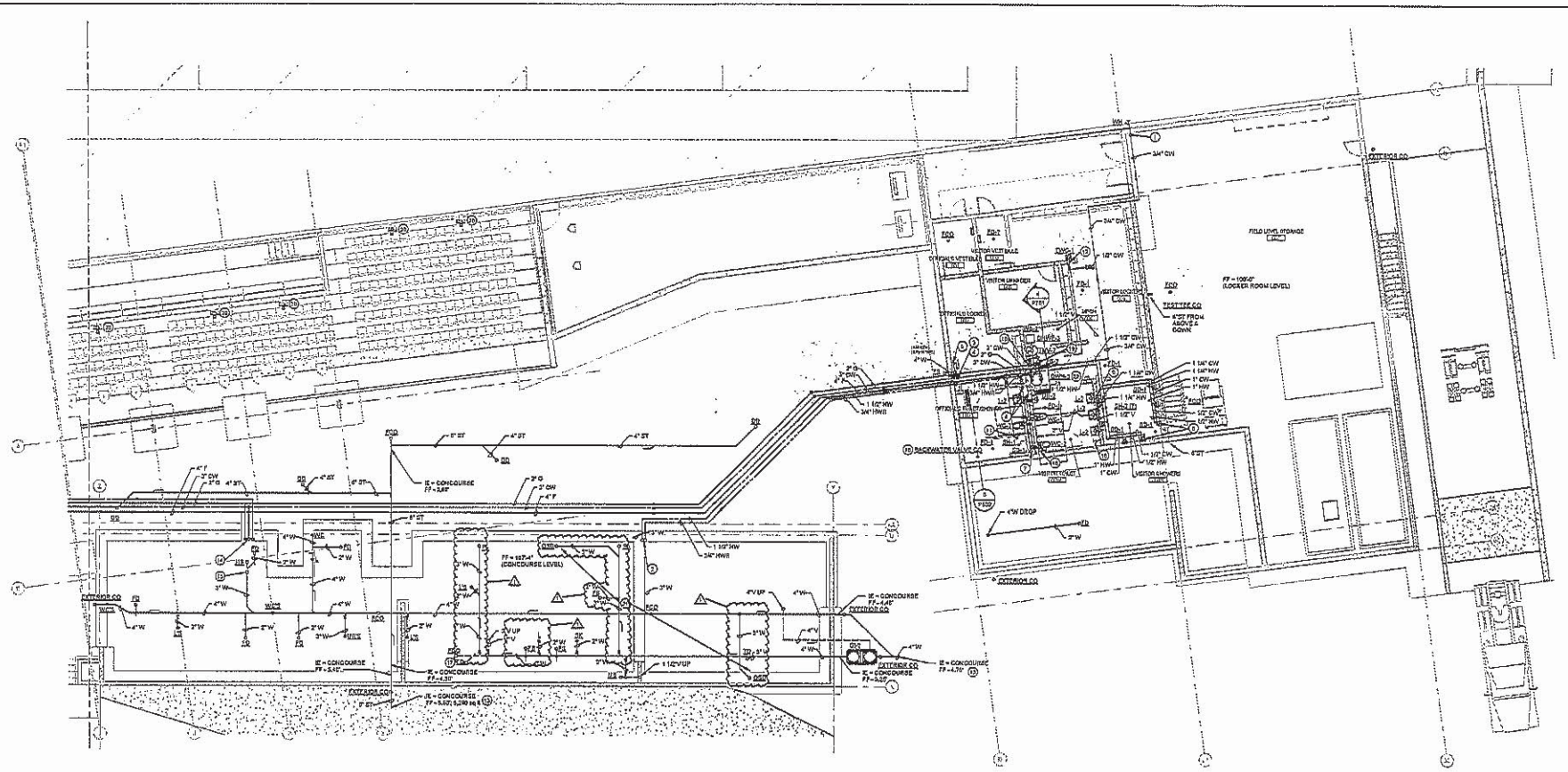

FIELD LEVEL PLUMBING PLAN - UNIT A
Scale: 1/8" = 1'-0"

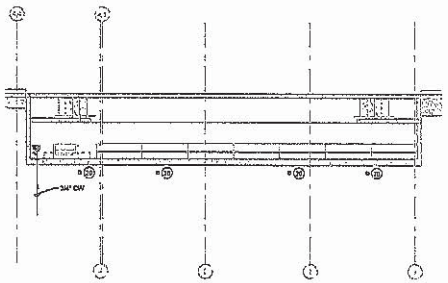

VISITOR DUGOUT PLUMBING PLAN
Scale: 3/8" = 1'-0"

GENERAL NOTES:

1. SEE DRAWING P001 FOR GENERAL NOTES AND SYMBOLS.
2. PROVIDE DRAIN VALVES WITH HOSE CONNECTIONS AT LOW POINTS OF SUPPLY LINES FOR WINTERIZATION DRAIN DOWN.
3. INSTALL PIPE SLEEVES AT ALL WALL AND FLOOR PENETRATIONS. INSTALL LINK SEAL WHEN ENTERING FINISHED AREAS.
4. SURVEY HW, HWR, CW AND P LINES MINIMUM 3'-0" BELOW GRADE.

ⓟ PLAN NOTES:

1. 3/4"CW DROP TO HWH, MOUNT HWH AT 24" ABOVE FINISHED EXTERIOR GRADE. VALVE AT 48" AFF.
2. 2"HW FROM ABOVE AND DOWN UP.
3. INSTALL CAD PRESSURE REGULATOR IN GAS LINE. REGULATOR TO REDUCE GAS GPM FROM 2 PSI DOWN TO 14" WATER COLUMN. EXTEND REGULATOR VENT UP AND THRU ROOF.
4. 2"CD RISE, 2"DW DROP, 2"HW DROP AND 3/4"HWR RISE - PROVIDE 3/4" STUB, VALVE AND HOSE CONNECTION AT LOW POINT FOR SPRITEA DRAIN DOWN. 4" FIRE LINE. SEE FP DRAWINGS.
5. 4"W DOWN. PROVIDE P-TRAP INSIDE BUILDING.
6. 1/2"HW AND 1 1/2"CW DROP, 4"W DOWN, 4"V UP AND THRU ROOF.
7. INSTALL "WMA".
8. 1/2"HW AND 1/2"CW DROP, TYPICAL AT EACH EC.
9. 3/4"HW AND 3/4"CW DROP, 2"W DOWN AND 1 1/2"V RISE ROUGH-IN FOR ALL LAVATORIES.
10. 2"D, 2"HW, 2"CW AND 3/4"HWR - SEE DIAGRAM 4/P701.
11. EXTEND 1/2"HW AND 1/2"CW DI WALL FOR EK.
12. 1"CW, DROP 2"W DOWN AND 1 1/2"V RISE.
13. SEE CIVIL SITE UTILITY DRAWING FOR CONTINUATION.
14. 4"V UP. SEE FP DRAWINGS. 3"CW UP, SWITCH FROM ABOVE: 15 AT 2 PSI UP. INSTALL GAS PIPE IN A SEAL ENCASEMENT PIPE FROM OUTSIDE THE FOUNDATION WALL TO UP THRU THE FLOOR. PROVIDE GAS CAGING VENT.
15. 1 1/2"V UP.
16. EXTEND SADRAINATER VALVE GO UP TO FLUSH WITH FF.
17. PROVIDE FUTURE INSTALL TO PROVIDED BY ANOTHER DIVISION.
18. HEADER SUPPLY PIPE BELOW THRU WALL (ROUGH-IN AND PROVIDE HS AT LOW POINT.
19. 3"D RISE.
20. INSTALL DO AND CONNECT TO ST PIPE, SEE CIVIL SITE UTILITY/STORM DRAWINGS
21. PROVIDE AND INSTALL 4" PVC P/P CAST IRON BELOW GAS AND WITH LONG SWEEP ELBOWS TURNED UP THRU SLAB. PROVIDE FOR SCER AND SODA CARBONATED DRINK LINES. FIELD VERIFY EXACT LOCATION WITH SUPPLIERS AND VENDORS. SEE KITCHEN DRAWINGS FOR ADDITIONAL INFORMATION.
22. PROVIDE 4" DIA. CONCENTRIC VENT KIT. CONCENTRIC VENT KIT SHALL BE DUCT FROM WATER HEATER TO CONCENTRIC VENT KIT. CONCENTRIC VENT KIT TO PENETRATE ROOF. ATTACH OF CONCENTRIC VENT SHALL BE A MINIMUM OF 2' ROOF ABOVE THE TOP OF ROOF INSULATION. FOR PENETRATION THRU ROOF SEE "P/M301 - FLUE ROOF PENETRATION DETAIL."

CITY OF LAFAYETTE

STRUCTUREPOINT

Kettelhut CONSTRUCTION, Inc.

Applied Engineering Services

REITANO DESIGN GROUP

DESIGN 27 TECHNOLOGY + ACOUSTICS

LOEB STADIUM RENOVATION

COLUMBIAN PARK

MICHAEL DAVID HARDING REGISTERED PE 10300004 STATE OF INDIANA PROFESSIONAL ENGINEER

6/12/19

CERTIFIED BY

ISSUANCE INDEX
DATE:
06.12.19
PROJECT PHASE:
CONSTRUCTION SET

REVISION SCHEDULE		
NO.	DESCRIPTION	DATE
1	PR-003	09/09/2019

Project Number 2015.02410

FIELD LEVEL PLUMBING PLAN - UNIT A

P301.A

6/12/2019 12:36:54 PM

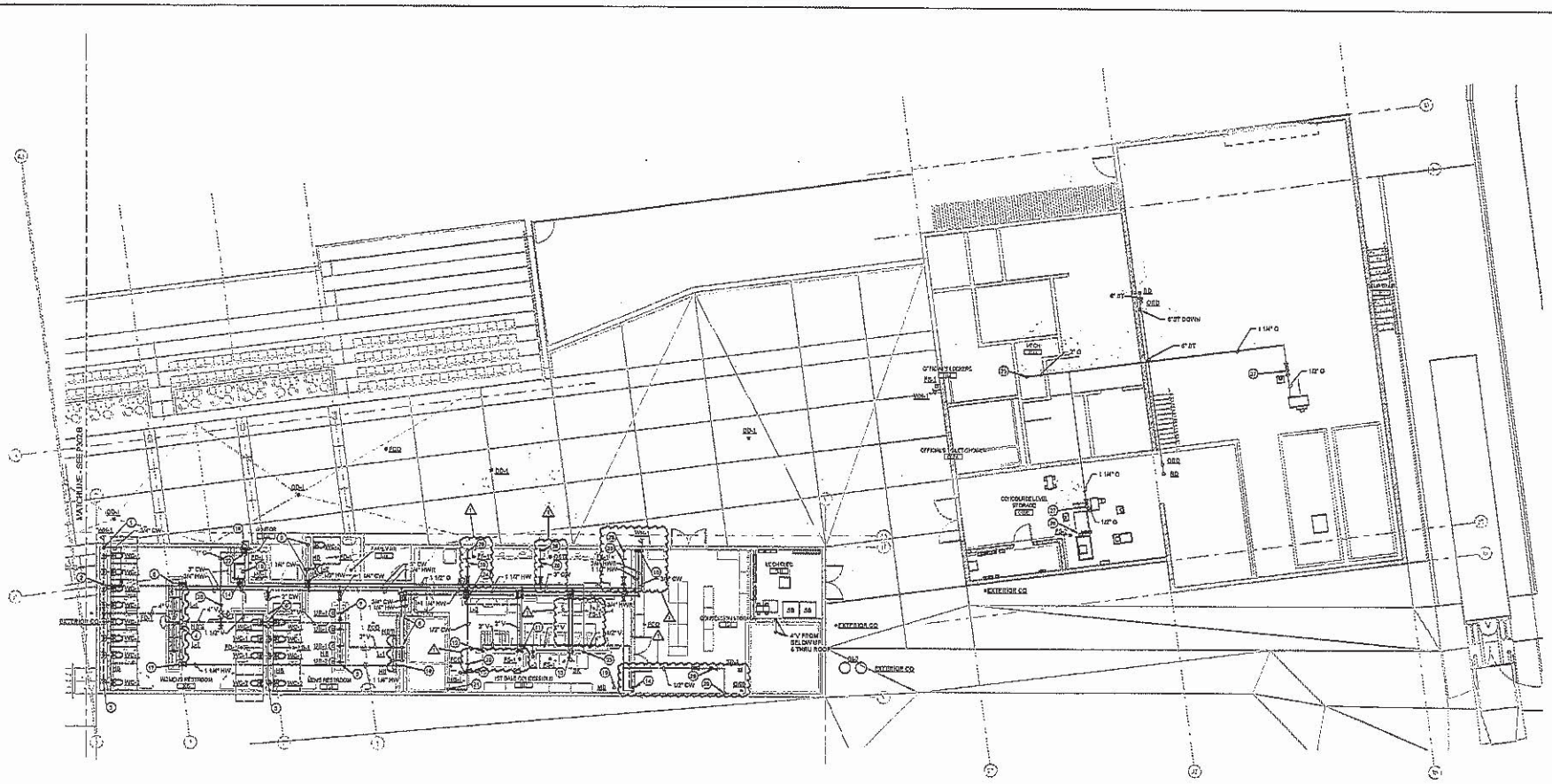

CONCOURSE PLUMBING PLAN - UNIT A

Scale: 1/8" = 1'-0"

GENERAL NOTES:

1. SEE DRAWING P501 FOR GENERAL NOTES AND SYMBOLS.
2. PROVIDE DRAIN VALVES WITH HOSE CONNECTIONS AT LOW POINTS OF SUPPLY LINES FOR WINTERIZATION DRAIN DOWN.
3. COORDINATE KITCHEN EQUIPMENT ROUGH-IN AND HOOK-UP WITH KITCHEN EQUIPMENT SUPPLIER.

PLAN NOTES:

1. 3/4"CW DROP TO WH.
2. 2"CW DROP, VALVE ABOVE CEILING WITH ACCESS PANEL, HEADER CW IN CHASE BELOW FLUSH VALVE THRU WALL ROUGH-IN, INSTALL HB AT LOW POINT FOR WINTER DRAIN DOWN, 4"W DOWN AND 2"V RISE.
3. INSTALL "WHA".
4. 2"W DOWN AND 2"V RISE.
5. 3/4"CW DROP TO LAVATORIES, PROVIDE VALVE ABOVE CEILING WITH ACCESS PANEL, 3/4"HW RISE FROM CHASE.
6. 2"CW DROP, VALVE ABOVE CEILING, PROVIDE ACCESS PANEL, 4"W DOWN AND 4"V UP AND THRU ROOF.
7. 1 1/4"CW DROP, VALVE ABOVE CEILING AND INSTALL HB AT LOW POINT FOR WINTER DRAIN DOWN, PROVIDE CEILING ACCESS PANEL FOR VALVE, 2"W DOWN AND 2"V RISE.
8. 1 1/4"HW AND 3/4"CW DROP, PROVIDE VALVES ABOVE CEILING AND INSTALL HW AND CW HOSE AT LOW POINT FOR WINTER DRAIN DOWN, PROVIDE ACCESS CEILING PANEL FOR VALVES, 2"W DOWN AND 1 1/2"V RISE, CIRCULATE 1 1/4" HW THRU CHASE.
9. 1/2"HW AND 1 1/4"CW DROP, PROVIDE VALVES ABOVE CEILING, PROVIDE ACCESS PANEL, INSTALL AT LOW POINT FOR WINTER DRAIN DOWN, 4"W DOWN AND 2"V RISE.
10. 3/4"HWR DOWN, 2"HW FROM BELOW.
11. 1/2"HW AND 1/2"CW DROP, 2"W DOWN AND 1 1/2"V RISE, EXTEND 1/2"HW, 1/2"CW, 1 1/2"W AND 1 1/2"V FOR LAVATORY.
12. 2"V FROM BELOW.
13. 3/4"HW AND 3/4"CW DROP, 2"W DOWN AND 1 1/2"V RISE, EXTEND TO ALL FAUCETS AND DRAIN CONNECTIONS.
14. 1/2"HW AND 1/2"CW DROP AND 1 1/2"V FROM BELOW.
15. 3"W CONNECT TO TO WITH P-TRAP.
16. 1 1/4"HW RISE.
17. 1 1/4"HW DROP, VALVE ABOVE CEILING AND HEADER IN CHASE.
18. 1"D FROM BELOW, RUN GAS CASING VENT UP AND THRU ROOF; 3"CW FROM BELOW, PROVIDE VALVE AT 36" AFF AND PROVIDE 3/4"VALVED STUB FOR WINTER BLOW DOWN; 3/4"CW DOWN TO DUGOUT.
19. 3"W FOR MB.
20. 1"D UP AND THRU ROOF.
21. 1/2"CW DROP TO DIN-1, ROUT CW THRU FILTER SYSTEM.
22. PROVIDE AND INSTALL GAS PRESSURE REGULATOR/REGULATOR TO SUPPLY 410 CFH FROM 3 PSI DOWN TO 0" WATER COLUMN, RUN 1" REGULATOR VENT UP THRU ROOF.
23. 1 1/2"D DROP AND CONNECT TO KITCHEN EQUIPMENT CONTRACT SUPPLIED GAS CONNECTOR KIT, VERIFY CONNECTION POINT LOCATION.
24. 1/2"HW AND 1/2"CW DROP; 2"W DOWN AND 1 1/2"V RISE, ROUGH-IN FOR BACK TO BACK LAVATORIES.
25. 3"D DROP.
26. PROVIDE SERVICE VALVE, UNION, REDUCER AND DRIP LEG AND CONNECT TO AHU COMPLETE, VERIFY LOCATION OF AHU HOOK-UP AND LOCATE GAS PIPE ACCORDINGLY.
27. PROVIDE SERVICE VALVE, UNION, REDUCER AND DRIP LEG AND CONNECT TO UNIT HEATER COMPLETE.
28. 1/2"CW DROP, SEE DETAIL UP302.
29. APPROVED BACKFLOW PREVENTER, SEE DETAIL UP302.

CITY OF LAFAYETTE

STRUCTUREPOINT INC

Kettelhut CONSTRUCTION, INC.

Applied Engineering Services

REITANO DESIGN GROUP

DESIGN 27 TECHNOLOGY + ACOUSTICS

LOEB STADIUM RENOVATION

COLUMBIAN PARK

6/12/19

CERTIFIED BY

ISSUANCE INDEX
DATE:
06.12.19
PROJECT PHASE:
CONSTRUCTION SET

REVISION SCHEDULE		
NO.	DESCRIPTION	DATE
1	PR-003	09/09/2019

Project Number 2015.02410

CONCOURSE PLUMBING PLAN - UNIT A

P302.A

9/10/2019 1:31:04 PM

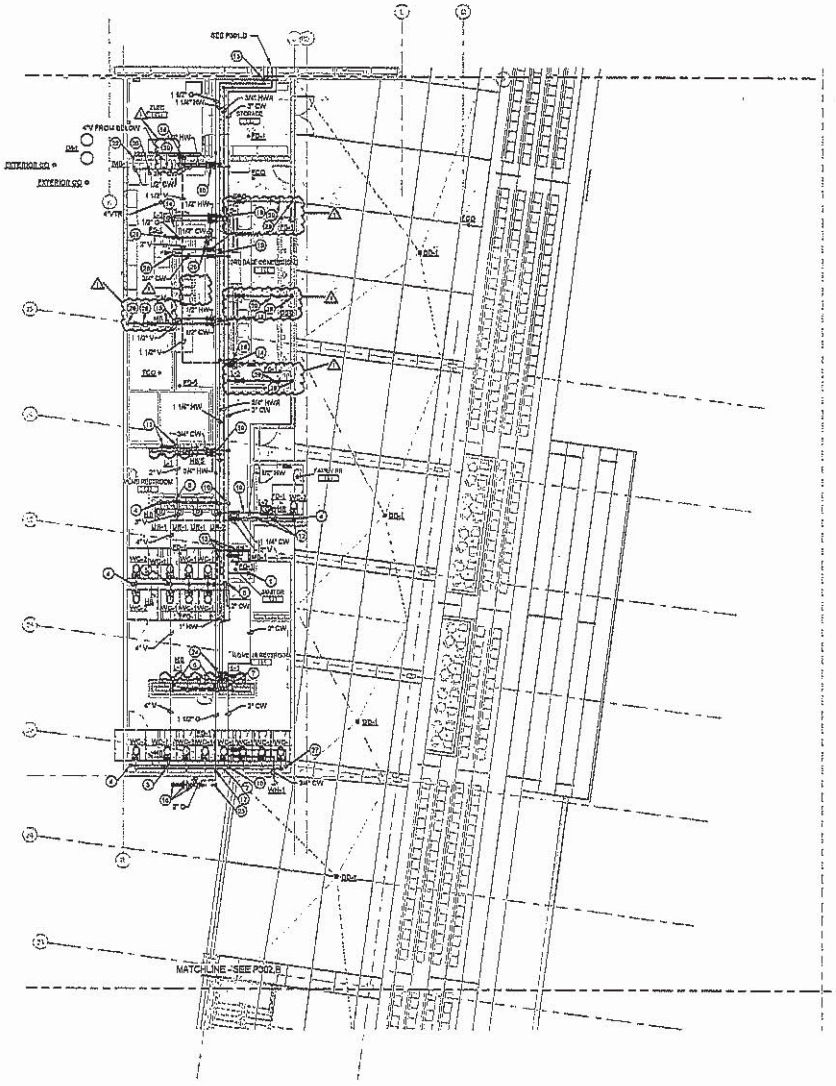

CONCOURSE PLUMBING PLAN - UNIT C
SCALE: 1/8" = 1'-0"

GENERAL NOTES:

1. SEE DRAWING P001 FOR GENERAL NOTES AND SYMBOLS.
2. PROVIDE DRAIN VALVES WITH HOSE CONNECTIONS AT LOW POINTS OF SUPPLY LINES FOR WINTERIZATION DRAIN DOWN.
3. COORDINATE KITCHEN ROUGH-IN AND HOOK-UP WITH KITCHEN EQUIPMENT SUPPLIER.

PLAN NOTES:

1. 3"CW FROM BELOW, VALVE ABOVE FLOOR.
2. 4"DOWN.
3. 4"RISE.
4. INSTALL WHA.
5. 4"W DOWN AND 4"W UP AND THRU ROOF.
6. 2"W DOWN AND 1 1/2"V RISE.
7. 3/4"WH AND 3/4"CW DROP, VALVE ABOVE CEILING AND PROVIDE CEILING ACCESS PANEL, 3/4"WHR FROM BELOW CIRCULATE HW THRU ENTIRE CHASE, PROVIDE SURFACE MOUNTED HOSE FOR WINTER DRAIN DOWN.
8. 2"CW DROP, VALVE ABOVE CEILING AND PROVIDE CEILING ACCESS PANEL. HEADER IN CHASE BELOW FLUSH VALVE ROUGH-IN AND PROVIDE EXPOSED HB AT LOW POINT FOR WINTER DRAIN DOWN.
9. 2"W DOWN AND 2"V RISE.
10. 1 1/4" CW DROP, VALVE ABOVE CEILING AND PROVIDE CEILING ACCESS PANEL FOR VALVE. HEADER CW BELOW FLUSH VALVE ROUGH-IN AND PROVIDE EXPOSED HB FOR WATER DRAIN DOWN.
11. 3/4"HW AND 3/4"CW DROP, 2"W DOWN AND 1 1/2"V RISE, PROVIDE EXPOSED HW AND CW RISE AT LOW POINT FOR WATER DRAIN DOWN.
12. 1/2"HW AND 1 1/4"CW DROP, VALVES ABOVE CEILING, PROVIDE CEILING ACCESS PANEL, PROVIDE EXPOSED HB 3 AT LOW POINT FOR WATER DRAIN DOWN,4"W DOWN AND 2"V RISE.
13. 1/2"HW AND 1/2"CW DROP AND 1 1/2"V FROM BELOW,2"W FOR HB.
14. 1/2"HW AND 1/2"CW DROP, 2"W DOWN AND 1 1/2"V RISE.
15. 2"D, 2"CW AND 3/4"HWR DROP, 2"HW RISE.
16. BOOSTING GAS DEVICE AND GAS METER LOCATION. GAS SERVICE CONNECTED LOAD 2,341 CFH AND PRESSURE SETTING AT 2 PSI.
17. 1 1/2"D INTO CHASE AND RISE, SUPPLY 1,153 CFH AT 2 PSI.
18. 2"CW DROP, VALVE DROP PROVIDE 24"X 24" METAL AND LOCKABLE ACCESS PANEL. EXTEND 2"CW HEADER BELOW FLUSH VALVE THRU WALL ROUGH-IN AND PROVIDE EXPOSED WALL MOUNTED HB AT LOW POINT FOR WINTER DRAIN DOWN.
19. PROVIDE ACCESS PANEL IN CEILING FOR VALVES.
20. 2"W CONNECT TO TRENCH DRAIN.
21. 1 1/2"D DROP AND CONNECT TO KITCHEN EQUIPMENT CONTRACT SUPPLIED GAS CONNECTOR STC WITH EQUIPMENT SHUT OFF VALVE LOCATION.
22. 12"DW DROP TO IMB, ROUT CW THRU FILTER SYSTEM.
23. 2"D DOWN.
24. 2"D UP THRU ROOF.
25. PROVIDE AND INSTALL GAS PRESSURE REGULATOR. REGULATOR TO SUPPLY 418 CFH FROM 2 PSI DOWN TO 4" WATER COLUMN. RUN 1" REGULATOR VENT UP THRU ROOF.
26. 3/4"WH AND 3/4"CW DROP, 2"W DOWN AND 1 1/2"V RISE. EXTEND TO ALL FAUCETS AND DRAINS. EXTEND SANITARY/S OVAL DRAIN TO PIT.
27. SEE DETAIL 1/P500.
28. 12"CW DROP, SEE DETAIL 1/P502.
29. AP APPROVED BOX FLOW INDICATOR, SEE DETAIL 6/P500.

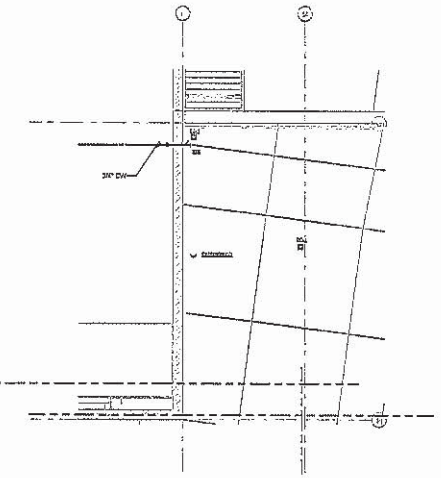

CONCOURSE LEVEL PLUMBING PLAN - UNIT D - CALLOUT
SCALE: 1/8" = 1'-0"

CITY OF LAFAYETTE

STRUCTUREPOINT

Kettelhut CONSTRUCTION, INC.

Applied Engineering Services

REITANO DESIGN GROUP

DIVISION 27 TECHNOLOGY + ACOUSTICS

LOEB STADIUM RENOVATION

COLUMBIAN PARK

DANIEL DAVID JACKSON REGISTERED AL PE17500004 STATE OF ALABAMA PROFESSIONAL ENGINEER

6/12/19

CERTIFIED BY

ISSUANCE INDEX
DATE:
06-12-19
PROJECT PHASE:
CONSTRUCTION SET

REVISION SCHEDULE		
NO.	DESCRIPTION	DATE
1	PR-003	09/09/2019

Project Number 2015.02410

CONCOURSE PLUMBING PLAN - UNIT C

P302.C

6/12/2019 1:31:15 PM

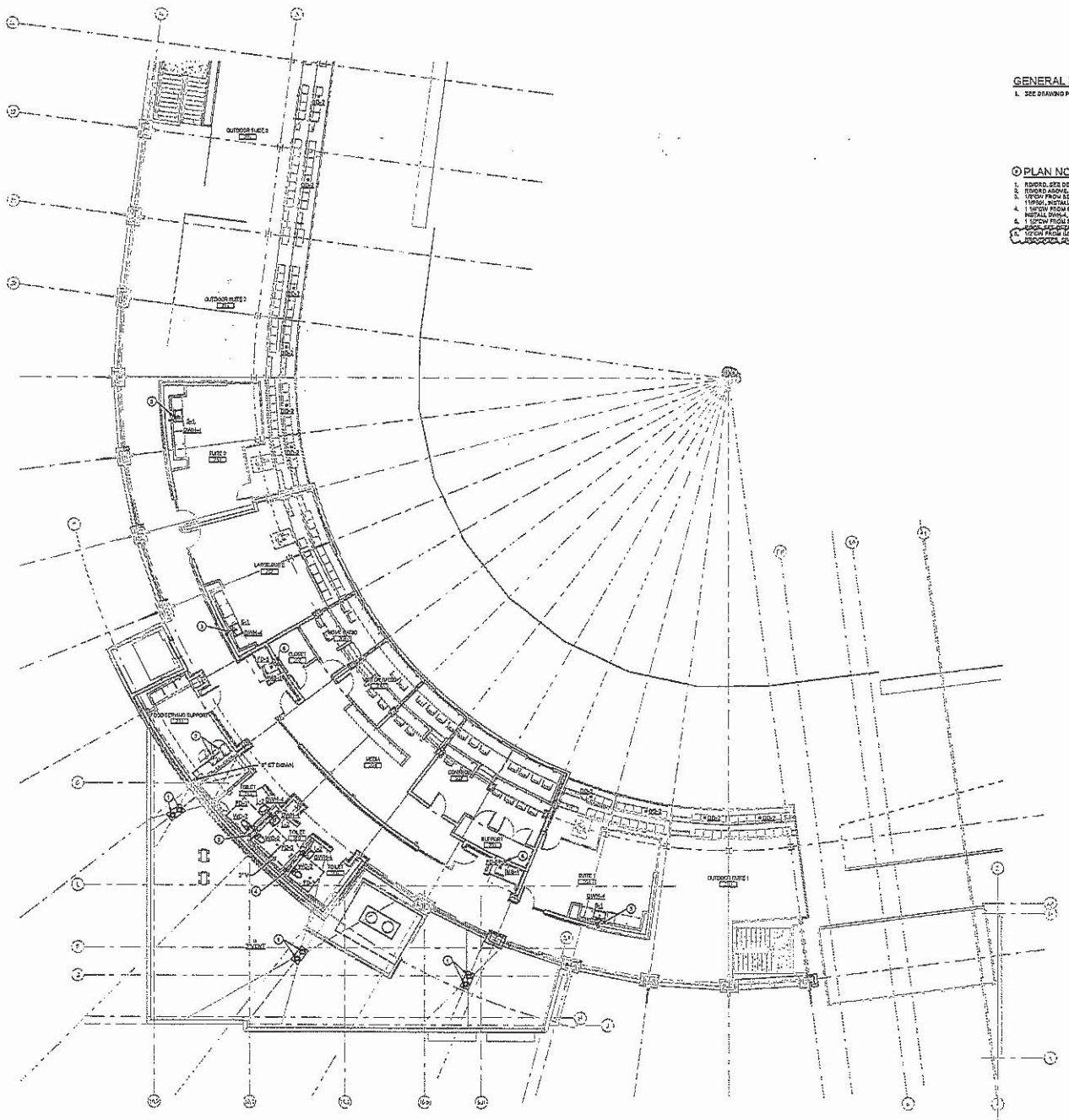

PRESS LEVEL PLUMBING PLAN - UNIT B

Scale: 1/8" = 1'-0"

GENERAL NOTES:

1. SEE DRAWING P001 FOR GENERAL NOTES AND SYMBOLS.

PLAN NOTES:

1. RD/DRD, SEE DETAIL 7/P501.
2. RD/DRD ABOVE, SEE DETAIL 7/P501.
3. 1/2"CW FROM BELOW; 2"W DOWN AND 1 1/2"V UP AND 3"THRU ROOF, SEE DETAIL 11/P501, INSTALL DWH-4 SEE DETAIL 2/P502.
4. 1 1/2"CW FROM BELOW, VALVE AND INSTALL "WH4", 4"W DOWN AND 2"V RISE, INSTALL DWH-4, SEE DETAIL 2/P502.
5. 1 1/2"CW FROM BELOW, VALVE AND INSTALL "WH4", 4"W DOWN, 4"V UP AND THRU ROOF, SEE DETAIL 11/P501, INSTALL DWH-4 SEE DETAIL 2/P502.
6. 1/2"CW FROM BELOW, INSTALL VALVE AND INSTALL APPROVED BACKFLOW PREVENTER, SHIMS TO DETAIL 1/P502.

CITY OF LAFAYETTE

AMERICAN STRUCTUREPOINT INC.

Kettelhut CONSTRUCTION, INC.

Applied Engineering Services

REITANO DESIGN GROUP

DESIGN 27 TECHNOLOGY + ACOUSTICS

LOEB STADIUM RENOVATION

COLUMBIAN PARK

6/12/19

CERTIFIED BY

ISSUANCE INDEX
DATE:
06.12.19
PROJECT PHASE:
CONSTRUCTION SET

REVISION SCHEDULE		
NO.	DESCRIPTION	DATE
1	PR-003	09/08/2019

Project Number 2015.02410

PRESS LEVEL PLUMBING PLAN - UNIT B

P303.B

9/10/2019 1:31:22 PM

D.A. DODD

CORPORATE OFFICE
14 E. Michigan Street
P.O. Box 430
Rolling Prairie, IN 46371
Phone (219) 778-4302
FAX (219) 778-2981

1251 Paw Paw Avenue
Benton Harbor, MI 49022
Phone (269) 926-7873
FAX (269) 926-7871

3416 Rascal Drive
Lafayette, IN 47909
Phone (765) 448-3405
FAX (765) 448-7955

2516 N. Home Street
Mishawaka, IN 46545
Phone (574) 968-0589
FAX (574) 968-0590

September 27, 2019

Kettelhut Construction, Inc.
740 Sagamore Pkwy. South
Lafayette, IN 47903

Attention: Logan Brown

Re: Loeb Stadium Renovation
D.A. Dodd Job #LF19-013E CP-3/PR #3

Please accept the cost perform the changes per PR #3 for the sum of **Forty-Three Thousand, Four Hundred and Sixty-Eight Dollars and 00/100 Cents.**

Subtotal	$39,757.44
Mark Up	$ 3,710.56
Total	$43,468.00

If you have any questions on the above, please do not hesitate to contact me at 765/448-3405 or by email at brettsanders@dadodd.com.

Respectfully,

Brett Sanders

D.A.DODD

Job Name: Loeb Stadium Renovation

CP-3

D.A. Dodd Job LF19-013E	Material			Labor	
Description	Quantity	Unit Price	Total	Labor Cost	Total Labor
Material					
P300.C - Credit					
4" x 2" sw combo	-1	$29.64	-$29.64	0.98	-0.98
4" sw combo	-1	$40.11	-$40.11	1.65	-1.65
4" x 2" sw wye	-2	$25.98	-$51.96	1.16	-2.32
2" sw 1/8 bend	-2	$7.77	-$15.54	0.41	-0.82
2" sw p-traps	-3	$29.97	-$89.91	0.46	-1.38
2" FD-1's	-3	$546.16	-$1,638.48	1.3	-3.9
2" x 10' h&s pipe	-2	$46.62	-$93.24	1.5	-3
	0	$0.00	$0.00	0	0
	0	$0.00	$0.00	0	0
	0	$0.00	$0.00	0	0
P300.C - Install	0	$0.00	$0.00	0	0
4" x 10' h&s pipe	2	$82.32	$164.64	2.5	5
4" sw combo	1	$40.11	$40.11	1.65	1.65
4" x 2" sw combo	1	$29.64	$29.64	0.98	0.98
4" x 3" sw combo	1	$34.89	$34.89	1.39	1.39
4" x 3" sw reducer	1	$12.47	$12.47	0.63	0.63
3" x 10' h&s pipe	6	$63.30	$379.80	11.4	68.4
3" sw p-traps	4	$38.19	$152.76	0.7	2.8
3" FS-1 floor sinks	3	$1,415.18	$4,245.54	1.5	4.5
3" sw wye	1	$25.80	$25.80	1.15	1.15
3" sw 1/8 bend	1	$12.21	$12.21	0.61	0.61
3" sw combo	1	$29.04	$29.04	1.18	1.18
	0	$0.00	$0.00	0	0
	0	$0.00	$0.00	0	0
	0	$0.00	$0.00	0	0
	0	$0.00	$0.00	0	0
	0	$0.00	$0.00	0	0
	0	$0.00	$0.00	0	0
Material Total			**$3,168.02**		
Subcontractors					
Sheet Metal	1		$0.00		0
Controls	1		$0.00		0
Insulation	1		$0.00		0
Test and Balance	1		$0.00		0
Excavation - 60' of ditch @ $29 a ft.	1	$1,740.00	$1,740.00		0
			$0.00		0
			$0.00		0
			$0.00		0
			$0.00		0
Subcontractors Total			**$1,740.00**		74.24
				Labor Cost	$76.00
				Total Labor	$5,642.24

Sub Total	$10,550.26
10% Mark Up - Material	$316.80
5% Mark Up - Subs	$87.00
10% Mark Up - Labor	$564.22
Total	$11,518.29

D.A.DODD

Job Name: Loeb Stadium Renovation

CP-3

D.A. Dodd Job LF19-013E

	Material			Labor	
Description	Quantity	Unit Price	Total	Labor Cost	Total Labor
Material					
P301.A Credit					
4" x 2" sw wye	-1	$25.98	-$25.98	1.16	-1.16
2" sw wye	-1	$13.92	-$13.92	0.78	-0.78
2" sw p-trap	-3	$29.97	-$89.91	0.46	-1.38
2" FD-1	-3	$546.16	-$1,638.48	1.3	-3.9
2" x 10' h&s pipe	-4	$46.62	-$186.48	1.5	-6
4" x 2" sw combo	-1	$29.64	-$29.64	1.18	-1.18
	0	$0.00	$0.00	0	0
	0	$0.00	$0.00	0	0
	0	$0.00	$0.00	0	0
	0	$0.00	$0.00	0	0
	0	$0.00	$0.00	0	0
	0	$0.00	$0.00	0	0
	0	$0.00	$0.00	0	0
	0	$0.00	$0.00	0	0
P301.A Install	0	$0.00	$0.00	0	0
4" x 3" sw combo	4	$34.89	$139.56	1.39	5.56
3" x 2" sw wye	1	$20.04	$20.04	0.98	0.98
2" sw 1/4 bend	1	$10.71	$10.71	0.43	0.43
3" sw p-trap	6	$38.19	$229.14	0.7	4.2
3" x 10' h&s pipe	8	$63.30	$506.40	1.9	15.2
3" FS-1	4	$1,415.18	$5,660.72	1.5	6
3" sw combo	1	$29.04	$29.04	1.18	1.18
3" wye	1	$25.80	$25.80	1.15	1.15
3" sw 1/8 bend	2	$12.21	$24.42	0.61	1.22
3" sw 1/4 bend	1	$19.11	$19.11	0.63	0.63
	0	$0.00	$0.00	0	0
	0	$0.00	$0.00	0	0
	0	$0.00	$0.00	0	0
Material Total			**$4,680.53**		
Subcontractors					
Sheet Metal	1		$0.00		0
Controls	1		$0.00		0
Insulation	1		$0.00		0
Test and Balance	1		$0.00		0
Excavation - 40' of ditch @ $29 a ft.	1	$1,160.00	$1,160.00		0
			$0.00		0
			$0.00		0
			$0.00		0
			$0.00		0
Subcontractors Total			**$1,160.00**		22.15
				Labor Cost	$76.00
				Total Labor	$1,683.40

Sub Total	$7,523.93
10% Mark Up - Material	$468.05
5% Mark Up - Subs	$58.00
10% Mark Up - Labor	$168.34
Total	$8,218.32

D.A.DODD

Job Name: Loeb Stadium Renovation

CP-3

D.A. Dodd Job LF19-013E	Material			Labor	
Description	Quantity	Unit Price	Total	Labor Cost	Total Labor
Material					
P302.A					
1/2" Zurn 375xl bfp's	5	$231.48	$1,157.39	1.5	7.5
air gap fittings	5	$45.73	$228.63	0.53	2.65
1/2" brass lead free strainers	5	$25.00	$125.00	0.53	2.65
1/2" Nibco T-585-66 lf ball valves	5	$20.14	$100.68	0.53	2.65
1/2" fip x fip swivel flex connecters	5	$35.00	$175.00	0.2	1
3" x 1/2" copper tee's	3	$49.00	$147.00	1.76	5.28
3/4" x 1/2" copper tee	1	$1.03	$1.03	0.69	0.69
1/2" copper mip adapters	15	$0.55	$8.25	0.22	3.3
1/2" copper swt x mip adapter unions	5	$14.00	$70.00	0.4	2
1/2" x 3" brass nipples	10	$1.80	$18.00	0.05	0.5
1/2" copper cw pipe	100	$0.98	$97.60	0.06	6
1/2" copper swt 90's	25	$0.27	$6.70	0.4	10
3/4" copper pipe	100	$1.59	$159.00	0.06	6
3/4" copper mip adapters	5	$0.92	$4.60	0.29	1.45
3/4" copper swt 90's	25	$0.59	$14.75	0.53	13.25
3/4" copper swt tee's	5	$1.08	$5.40	0.77	3.85
3/4" copper swt. fitting fip adapters	5	$4.17	$20.85	0.54	2.7
3/4" galv. plug	5	$2.30	$11.50	0.05	0.25
	0	$0.00	$0.00	0	0
	0	$0.00	$0.00	0	0
wall penetration w/ sleeve	1	$5.00	$5.00	1.5	1.5
	0	$0.00	$0.00	0	0
	0	$0.00	$0.00	0	0
test bfp's	5	$0.00	$0.00	1	5
	0	$0.00	$0.00	0	0
	0	$0.00	$0.00	0	0
	0	$0.00	$0.00	0	0
	0	$0.00	$0.00	0	0
Material Total			**$2,356.37**		
Subcontractors					
Sheet Metal	1		$0.00		0
Controls	1		$0.00		0
Insulation	1	$1,034.00	$1,034.00		0
Test and Balance	1		$0.00		0
			$0.00		0
			$0.00		0
			$0.00		0
			$0.00		0
			$0.00		0
Subcontractors Total			**$1,034.00**		78.22
				Labor Cost	$76.00
				Total Labor	$5,944.72

Sub Total	$9,335.09
10% Mark Up - Material	$235.64
5% Mark Up - Subs	$51.70
10% Mark Up - Labor	$594.47
Total	$10,216.90

D.A.DODD

Job Name: Loeb Stadium Renovation

CP-3

D.A. Dodd Job LF19-013E	Material			Labor	
Description	Quantity	Unit Price	Total	Labor Cost	Total Labor
Material					
P302.C					
1/2" Zurn 375xl bfp's	5	$231.48	$1,157.40	1.5	7.5
air gap fittings	5	$45.73	$228.65	0.5	2.5
1/2" brass lead free strainers	5	$25.00	$125.00	0.53	2.65
1/2" Nibco t-585-66 lf ball valves	5	$20.14	$100.70	0.53	2.65
1/2" fip x fip swivel flex connecters	5	$35.00	$175.00	0.2	1
3" x 1/2" copper tee's	3	$49.00	$147.00	1.76	5.28
3/4" x 1/2" copper tee	2	$1.03	$2.06	0.69	1.38
1/2" copper mip adapters	15	$0.55	$8.25	0.22	3.3
1/2" copper swt x mip adapter unions	5	$14.00	$70.00	0.4	2
1/2" x 3" brass nipples	10	$1.80	$18.00	0.05	0.5
1/2" copper cw pipe	100	$0.98	$98.00	0.06	6
1/2" copper swt 90's	25	$0.27	$6.70	0.4	10
3/4" copper pipe	100	$1.59	$159.00	0.06	6
3/4" copper mip adapters	5	$0.92	$4.60	0.29	1.45
3/4" copper swt 90's	25	$0.59	$14.75	0.53	13.25
3/4" copper swt tee's	5	$1.08	$5.40	0.77	3.85
3/4" copper swt. fitting fip adapters	5	$4.17	$20.85	0.54	2.7
3/4" galv. plug	5	$2.30	$11.50	0.05	0.25
	0	$0.00	$0.00	0	0
	0	$0.00	$0.00	0	0
wall penetration w/ sleeve	1	$5.00	$5.00	1.5	1.5
	0	$0.00	$0.00	0	0
	0	$0.00	$0.00	0	0
test bfp's	5	$0.00	$0.00	1	5
	0	$0.00	$0.00	0	0
	0	$0.00	$0.00	0	0
	0	$0.00	$0.00	0	0
	0	$0.00	$0.00	0	0
Material Total			**$2,357.86**		
Subcontractors					
Sheet Metal	1		$0.00		0
Controls	1		$0.00		0
Insulation	1	$1,034.00	$1,034.00		0
Test and Balance	1		$0.00		0
			$0.00		0
			$0.00		0
			$0.00		0
			$0.00		0
			$0.00		0
Subcontractors Total			**$1,034.00**		78.76
				Labor Cost	$76.00
				Total Labor	$5,985.76

Sub Total	$9,377.62
10% Mark Up - Material	$235.79
5% Mark Up - Subs	$51.70
10% Mark Up - Labor	$598.58
Total	$10,263.68

D.A.DODD

Job Name: Loeb Stadium Renovation

CP-3

D.A. Dodd Job LF19-013E	Material			Labor	
Description	Quantity	Unit Price	Total	Labor Cost	Total Labor
Material					
P303.B					
1/2" Zurn 375xl bfp's	2	$231.48	$462.96	1.5	3
air gap fittings	2	$45.73	$91.46	0.5	1
1/2" brass lead free strainers	2	$25.00	$50.00	0.53	1.06
1/2" Nibco T-585-66 lf ball valves	2	$20.14	$40.28	0.53	1.06
1/2" fip x fip swivel flex connecters	2	$35.00	$70.00	0.2	0.4
	0	$0.00	$0.00	0	0
	0	$0.00	$0.00	0	0
1/2" copper mip adapters	4	$0.55	$2.20	0.22	0.88
1/2" copper swt x mip adapter unions	2	$14.00	$28.00	0.4	0.8
1/2" x 3" brass nipples	4	$1.80	$7.20	0.05	0.2
1/2" copper cw pipe	10	$0.98	$9.80	0.06	0.6
1/2" copper swt 90's	10	$0.27	$2.70	0.4	4
3/4" copper pipe	10	$1.59	$15.90	0.06	0.6
3/4" copper mip adapters	2	$0.92	$1.84	0.29	0.58
3/4" copper swt 90's	10	$0.59	$5.90	0.53	5.3
3/4" copper swt tee's	2	$1.08	$2.16	0.77	1.54
3/4" copper swt. Fitting fip adapters	2	$4.17	$8.34	0.54	1.08
3/4" galv. plug	2	$2.30	$4.60	0.05	0.1
	0	$0.00	$0.00	0	0
	0	$0.00	$0.00	0	0
	0	$0.00	$0.00	0	0
	0	$0.00	$0.00	0	0
	0	$0.00	$0.00	0	0
test bfp's	2	$0.00	$0.00	1	2
	0	$0.00	$0.00	0	0
	0	$0.00	$0.00	0	0
	0	$0.00	$0.00	0	0
	0	$0.00	$0.00	0	0
Material Total			**$803.34**		
Subcontractors					
Sheet Metal	1		$0.00		0
Controls	1		$0.00		0
Insulation	1	$328.00	$328.00		0
Test and Balance	1		$0.00		0
			$0.00		0
			$0.00		0
			$0.00		0
			$0.00		0
			$0.00		0
Subcontractors Total			**$328.00**		24.20
				Labor Cost	$76.00
				Total Labor	$1,839.20

Sub Total	$2,970.54
10% Mark Up - Material	$80.33
5% Mark Up - Subs	$16.40
10% Mark Up - Labor	$183.92
Total	$3,251.19

CENTRAL SUPPLY COMPANY

Quotation

Central Supply Company - LAF
3980 State Road 38 East
LAFAYETTE, IN 47905
765-447-4800
Fax 317-899-6421

EXPIRATION DATE	QUOTE NUMBER
09/21/2019	S100240105

Central Supply Company - LAF 3980 State Road 38 East LAFAYETTE, IN 47905 765-447-4800 Fax 317-899-6421	PAGE NO.
	1 of 1

QUOTE TO:

D A DODD INC
14 E MICHIGAN STREET
ROLLING PRAIRIE, IN 46371

SHIP TO:

D A DODD INC
3416 RASCAL DR
LAFAYETTE, IN 47905

CUSTOMER NUMBER	CUSTOMER PO NUMBER	JOB NAME / RELEASE NUMBER	SALESPERSON
3596	LOEB STADIUM		Bill Richmond

WRITER	SHIP VIA	TERMS	SHIP DATE	FREIGHT ALLOWED
Don Huckstep	OUR TRUCK	1% 10th Net 30th	09/20/2019	No

ORDER QTY	DESCRIPTION	UNIT PRICE	EXT PRICE
12ea	375XL LF 1/2" RED PRESS PRINCIPLE ASSEMBLY BACKFLOW PREVENTER ZURN/WILKINS Pn: 23763	231.478/ea	2777.74
12ea	WILKINS AG11 1/2-1" AIR/ GAP W/2" IPS SLIP OUTLET Pn: 23786	45.725/ea	548.70
12ea	1/2 T-585-66-LF BALL VLV FULL PORT BRONZE THD SS TRIM 600 PSI CWP RTFE SEATS STD LEVER HDLE NIBCO LEAD FREE *** THIS VALVE IS NOT RATED FOR GAS SERVICE *** LOW LEAD NSF61G COMPLIANT Pn: 34448	20.135/ea	241.62

Subtotal	3568.06
S&H Charges	0.00
Estimated Tax	0.00
Amount Due	3568.06

FARGO INSULATION CO., INC.

mechanical insulation contractors since 1949

2120 East Clay Street
Indianapolis, IN 46205

Phone 317.546.4881
Fax 317.546.4885
www.fargoinsulation.com

Insulation Change Proposal (#14784CP01)

September 27, 2019

Loeb Stadium at Columbia Park - PR# 003

Lafayette, IN

DA Dodd – Mr. Brett Sanders

PR# 003 Additional Domestic Water at Back Flow Preventers

	Drawing P302.A	Drawing P302.C	Drawing P303.B
Material:	**$ 303.00**	**$ 303.00**	**$ 40.00**
Labor:	**$ 731.00**	**$ 731.00**	**$ 288.00**
Total Add:	**$ 1,034.00**	**$ 1,034.00**	**$ 328.00**

Exclusions:

- Same as original bid.

We appreciate this opportunity to quote. Please call me at your convenience should you have any questions or need additional information.

Sincerely,

FARGO Insulation Co., Inc.

Jerry Allison

Jerry Allison, Senior Project Estimator
Jerry.Allison@fargoinsulation.com

MICCS SAFETY CERTIFIED

KETTELHUT CONSTRUCTION, INC. General Contractor/Construction Manager

740 Sagamore Parkway South
Lafayette, IN 47905
(765) 447-2181
Fax (765) 447-7122

January 22, 2020

Mr. Dan McCloskey
American Structurepoint, Inc.
9025 River Road, Suite 200
Indianapolis, IN 46240

Re: Loeb Stadium Renovation
Lafayette, Indiana
Kettelhut Project No. 6617

Gentlemen:

Enclosed please find cost documentation from applicable Contractors regarding American Structurepoint Proposal Request No. 6, as it pertains to adding storm pipe and deck drains. We have yet to receive responses from Contractors labeled N/R, but do not anticipate any other costs or credits than those shown below.

1.	BP #1 – General Trades	JR Kelly Co., Inc.	$ 443.00
2.	BP #2 – Masonry	James Scharer Masonry, Inc.	N/R
3.	BP #3 – Steel	Almet, Inc.	N/R
4.	BP #4 – Roofing	Horning Roofing & Sheet Metal Co., LLC	N/R
5.	BP #5 – Alum.	Central Indiana Glass & Glazing, Inc.	N/R
6.	BP #6 – Fire Sprinklers	Dalmatian Fire, Division of Shambaugh & Son, L.P.	N/R
7.	BP #7 – Mechanical	D. A. Dodd, LLC	$ 20,067.00
8.	BP #8 – Electrical	Huston Electric, Inc.	N/R
9.	BP #9 – Sports Lighting	Custer Electric, Inc.	N/R
10.	BP #10 – Scoreboard		
11.	BP #11 – Turf	Sprinturf, Inc.	N/R
12.	BP #12 – Stadium Seat	Irwin Seating Company	N/R
13.	BP #13 – Food Service	C&T Design & Equipment Co.	N/R
			$ 20,510.00

After your review, if this cost data is approved by your firm and the Owner, please advise in order for a Change Order to be initiated.

Sincerely,

KETTELHUT CONSTRUCTION, INC.

D. Alex Gonzalez
Executive Vice President

DAG: jas

Enclosure

cc: Field Office
City of Lafayette w/enclosure
Field Order 6617.036

AMERICAN STRUCTUREPOINT INC.

7260 Shadeland Station, Indianapolis, Indiana 46256
TEL 317.547.5580 FAX 317.543.0270

www.structurepoint.com

Proposal Request No. 006

Project Name: Loeb Stadium
Project Number: 2015.02410
Date: 11/16/2019

OWNER:
City of Lafayette, Indiana – Board of Public Works and Safety
20 North 6th Street
Lafayette, IN 47901

ARCHITECT / STRUCTURAL ENGINEER / CIVIL ENGINEER
American Structurepoint, Inc.
9025 River Road, Suite 200
Indianapolis, Indiana 46240
317.547.5580

MECHANICAL / PLUMBING / ELECTRICAL ENGINEER
Applied Engineering Services, Inc.
5975 Castle Creek Parkway N Drive, Suite 300
Indianapolis, IN 46250
317.810.4141

This Proposal Request is for informational and pricing purposes only and shall not be interpreted as instruction to perform the proposed Work indicated herein. Contractor shall detail all costs associated with the Work, itemized at a minimum by labor, material, overhead and profit. Specify whether the change in Work is an ADD, DEDUCT or NO CHANGE to the contract. After receiving pricing, the Architect shall direct the Contractor regarding how to proceed. If, and only if, the Work outlined in this Proposal Request causes no change in Contract sum or time, the Contractor may then proceed with the Work listed herein, at which point, said Work shall become part of the Contract Documents and modify the original Contract Documents and all prior changes as applicable. Requirements of the original Contract Documents and previous changes remain in effect except as modified by this Proposal Request.

The extent of this Proposal Request is as follows:

DOCUMENT MODIFICATIONS

DRAWINGS

A. See clouded revisions on the attached drawings.
   1. Drawing P300.B add storm pipe below MECH/ELEC room 119.
   2. Drawing P302.B add storm pipe serving Deck Drains where shown.
   3. Drawing P303.B add Deck Drains DD-2 where shown on the Press Level Concourse.
   4. Drawing P601 "Drainage Fixture Schedule" DD-2 drain has change to similar to a J R Smith 1610.

END OF PROPOSAL REQUEST.

D.A. DODD

CORPORATE OFFICE
14 E. Michigan Street
P.O. Box 430
Rolling Prairie, IN 46371
Phone (219) 778-4302
FAX (219) 778-2981

1251 Paw Paw Avenue
Benton Harbor, MI 49022
Phone (269) 926-7873
FAX (269) 926-7871

3416 Rascal Drive
Lafayette, IN 47909
Phone (765) 448-3405
FAX (765) 448-7955

2516 N. Home Street
Mishawaka, IN 46545
Phone (574) 968-0589
FAX (574) 968-0590

January 15, 2020

Kettelhut Construction, Inc.
740 Sagamore Pkwy. South
Lafayette, IN 47903

** REVISED**

Attention: Logan Brown

Re: Loeb Stadium Renovation
D.A. Dodd Job #LF19-013E CP-7/PR #6

Please accept the revised cost to perform the work to add deck drains per PR #6 – Press Level Drainage Modifications excluding insulation for the sum of **Twenty Thousand and Sixty-Eight Dollars and 00/100 Cents.**

Subtotal	$18,289.06
Mark Up	$1,778.94
Total	$20,067.00

If you have any questions on the above, please do not hesitate to contact me at 765/448-3405 or by email at brettsanders@dadodd.com.

Respectfully,

Brett Sanders

Attachment

cc: File
Field

6617.036

D.A.DODD

Job Name: Loeb Stadium Renovation — Revised — CP-7

D.A. Dodd Job LF19-013E

	Material			Labor	
Description	Quantity	Unit Price	Total	Labor Cost	Total Labor
Material					
	0	$0.00	$0.00	0	0
material from front sheet	1	$914.35	$914.35	20	20
	0	$0.00	$0.00	0	0
material from back sheet	1	$5,422.07	$5,422.07	116.14	116.14
	0	$0.00	$0.00	0	0
Scissor Lift Rental Weekly	2	$210.00	$420.00	0	0
	0	$0.00	$0.00	0	0
misc. expendables	1	$136.00	$136.00	0	0
	0	$0.00	$0.00	0	0
freight on the DD-2's	1	$50.00	$50.00	0	0
	0	$0.00	$0.00	0	0
	0	$0.00	$0.00	0	0
	0	$0.00	$0.00	0	0
	0	$0.00	$0.00	0	0
	0	$0.00	$0.00	0	0
	0	$0.00	$0.00	0	0
	0	$0.00	$0.00	0	0
	0	$0.00	$0.00	0	0
	0	$0.00	$0.00	0	0
	0	$0.00	$0.00	0	0
	0	$0.00	$0.00	0	0
	0	$0.00	$0.00	0	0
	0	$0.00	$0.00	0	0
	0	$0.00	$0.00	0	0
	0	$0.00	$0.00	0	0
	0	$0.00	$0.00	0	0
	0	$0.00	$0.00	0	0
	0	$0.00	$0.00	0	0
	0	$0.00	$0.00	0	0
Material Total			**$6,942.42**		
Subcontractors					
Sheet Metal	1		$0.00		0
Controls	1		$0.00		0
Insulation	1		$0.00		0
Test and Balance	1		$0.00		0
Excavation	1	$1,000.00	$1,000.00		0
			$0.00		0
			$0.00		0
			$0.00		0
			$0.00		0
Subcontractors Total			**$1,000.00**		136.14
				Labor Cost	$76.00
				Total Labor	$10,346.64

Sub Total	$18,289.06
10% Mark Up - Material	$694.24
5% Mark Up - Subs	$50.00
10% Mark Up - Labor	$1,034.66
Total	$20,067.97

QUAN.	DESCRIPTION	ea.	MAT'LS	ea.	LABOR
	BASE BID PLUMBING				PAGE 1
2	Link Seal	167.05	334.10	0.8	1.5
	6"				
7	DD-2	41.37	289.59	2.3	15.8
	JR Smith 1610				
	4"				
8	4" Escutcheon	5.55	44.40	0.3	2.0
	(Supply House)				
	Sleeves				
1	6"X6"	24.72	24.72		COMPUTER
1	10"X12"	58.54	58.54		COMPUTER
1	Expendables	100.00	100.00		N/A
1	4" Link Seal	63.00	63.00	0.8	0.8
			914.35		20.0

JOB 660 CP-7: LOEB STADIUM
ESTIMATE 1 CP-7: LOEB STADIUM
DATA SET 3 COMM MECH MCA/PHCC ...

COMBINED LOEB STADIUM
D.A. Dodd - Bob Siemers
3416 Rascal Drive
Lafayette, Indiana 47909
765-448-3405 / 765-448-7955
Bobsiemers@DADodd.com

PRINTED 12/5/2019 9:33:03 AM
MATERIAL Primary
LABOR Primary

NOTES

Item					Field Labor			Material		
Category	Size	Item Desc	Qty	U...	Fld Unit	Fld Adj	Fld Ext	Mat Unit	Mat Adj	Mat Ext
150# SCH 40 BLK MAL	6" x6"	SLEEVES--STEEL BL...	1.00	ea	0.75	1.00	0.75	21.75	1.00	21.75
150# SCH 40 BLK MAL	10" x12"	SLEEVES--STEEL BL...	1.00	ea	1.13	1.00	1.13	126.81	1.00	126.81
C.I. SOIL NO HUB	4"	PIPE--C.I. NO HUB	164.00	'	0.20	1.00	32.80	24.85	0.41	1,670.91
C.I. SOIL NO HUB	4"	1/8 BEND	2.00	ea	0.73	1.00	1.46	30.90	0.41	25.34
C.I. SOIL NO HUB	4"	SHORT SWEEP 1/4 ...	26.00	ea	0.78	1.00	20.28	65.90	0.41	702.49
C.I. SOIL NO HUB	4"	COMBINATION	5.00	ea	1.19	1.00	5.95	90.30	0.41	185.12
C.I. SOIL NO HUB	4"	SANITARY TEE	1.00	ea	1.11	1.00	1.11	65.80	0.41	26.98
C.I. SOIL NO HUB	4"	COUPLING	117.00	ea	0.05	1.00	5.85	24.35	0.31	883.17
C.I. SOIL NO HUB	4"	TEST TEE--WITH PL...	1.00	ea	0.82	1.00	0.82	134.90	0.41	55.31
C.I. SOIL COMP. JT.-SRV ...	4"	PIPE-SINGLE HUB-1...	6.00	'	0.22	1.00	1.32	37.02	0.41	91.07
C.I. SOIL COMP. JT.-SRV ...	6"	PIPE-SINGLE HUB-1...	29.00	'	0.32	1.00	9.28	70.08	0.41	833.25
C.I. SOIL COMP. JT.-SRV ...	6"	1/8 BEND	7.00	ea	1.12	1.00	7.84	100.80	0.41	289.30
C.I. SOIL COMP. JT.-SRV ...	6"	SHORT SWEEP 1/4 ...	1.00	ea	1.27	1.00	1.27	197.90	0.41	81.14
C.I. SOIL COMP. JT.-SRV ...	6"	WYE	1.00	ea	2.25	1.00	2.25	265.10	0.41	108.69
C.I. SOIL COMP. JT.-SRV ...	4"	GASKETS	2.00	ea	Skip	1.00	0.00	10.25	0.41	8.41
C.I. SOIL COMP. JT.-SRV ...	6"	GASKETS	13.00	ea	Skip	1.00	0.00	16.45	0.41	87.68
C.I. SOIL COMP. JT.-SRV ...	6" x4"	REDUCER	1.00	ea	0.83	1.00	0.83	93.70	0.41	38.42
HANGERS & CLAMPS ETC	4"	#260 CLEVIS HGR. ...	16.00	ea	1.40	1.00	22.40	23.06	0.15	54.61
HANGERS & CLAMPS ETC	5/8"	#146 ALL THREAD R...	64.00	ea	Skip	1.00	0.00	4.11	0.15	38.93
HANGERS & CLAMPS ETC	5/8"	HEAVY HEX NUTS	48.00	ea	Skip	1.00	0.00	4.62	0.15	32.82
HANGERS & CLAMPS ETC	5/8"	WASHER - FLAT-RO...	48.00	ea	Skip	1.00	0.00	2.63	0.15	18.68
HANGER-R.CLAMP-ETC.	5/8"	BEAM-CLAMP - BLK	16.00	ea	0.05	1.00	0.80	17.40	0.15	41.20
Grand Totals							116.14			5,422.07

CENTRAL SUPPLY COMPANY

Quotation

Central Supply Company - LAF
3980 State Road 38 East
LAFAYETTE, IN 47905
765-447-4800
Fax 317-899-6421

EXPIRATION DATE	QUOTE NUMBER
12/03/2019	S100277194

Central Supply Company - LAF
3980 State Road 38 East
LAFAYETTE, IN 47905
765-447-4800
Fax 317-899-6421

QUOTE TO:

D A DODD INC
14 E MICHIGAN STREET
ROLLING PRAIRIE, IN 46371

SHIP TO:

D A DODD INC
3416 RASCAL DR
LAFAYETTE, IN 47905

CUSTOMER NUMBER	CUSTOMER PO NUMBER	JOB NAME / RELEASE NUMBER	SALESPERSON
3596	LOEB DRAINS		Bill Richmond

WRITER	SHIP VIA	TERMS	SHIP DATE	FREIGHT ALLOWED
Don Huckstep	OUR TRUCK	1% 10th Net 30th	12/02/2019	No

ORDER QTY	DESCRIPTION	UNIT PRICE	EXT PRICE
1ea	ZURN FD2210-PV4, 4" PVC FLOOR DRAIN WITH ADJ 5-3/16" ROUND NB STRAINER Pn: 18525 PLUS UPS FROM INDY	41.325/ea	41.33

Subtotal	41.33
S&H Charges	0.00
Estimated Tax	0.00
Amount Due	41.33

FARGO INSULATION CO., INC.

mechanical insulation contractors since 1949

2120 East Clay Street
Indianapolis, IN 46205

Phone 317.546.4881
Fax 317.546.4885
www.fargoinsulation.com

Insulation Change Proposal (#14784CP02)

December 5, 2019

Loeb Stadium at Columbia Park - CP-7

Lafayette, IN

DA Dodd – Mr. Brett Sanders

CP-7 Additional Storm Piping at Upper Press Box

Material:	**$ 810.00**
Labor:	**$ 1,432.00**
Total Add:	**$ 2,242.00**

DELETED PER RSP REQUEST

Exclusions:

- Same as original bid.

We appreciate this opportunity to quote. Please call me at your convenience should you have any questions or need additional information.

Sincerely,

FARGO Insulation Co., Inc.

Jerry Allison

Jerry Allison, Senior Project Estimator
Jerry.Allison@fargoinsulation.com

MICCS SAFETY CERTIFIED

KETTELHUT CONSTRUCTION, INC. General Contractor/Construction Manager

740 Sagamore Parkway South
Lafayette, IN 47905
(765) 447-2181
Fax (765) 447-7122

March 4, 2020

Mr. Dan McCloskey
American Structurepoint, Inc.
9025 River Road, Suite 200
Indianapolis, IN 46240

Re: Loeb Stadium Renovation
Lafayette, Indiana
Kettelhut Project No. 6617

Gentlemen:

Enclosed please find cost documentation from applicable Contractors regarding PR #007, as it pertains to field drainage changes. We have yet to receive responses from Contractors labeled N/R, but do not anticipate any other costs or credits than those shown below.

1.	BP #1 – General Trades	JR Kelly Co., Inc.	$ 5,471.00
2.	BP #2 – Masonry	James Scharer Masonry, Inc.	N/R
3.	BP #3 – Steel	Almet, Inc.	N/R
4.	BP #4 – Roofing	Horning Roofing & Sheet Metal Co., LLC	N/R
5.	BP #5 – Alum.	Central Indiana Glass & Glazing, Inc.	N/R
6.	BP #6 – Fire Sprinklers	Dalmatian Fire, Division of Shambaugh & Son, L.P.	N/R
7.	BP #7 – Mechanical	D. A. Dodd, LLC	$ 308.00
8.	BP #8 – Electrical	Huston Electric, Inc.	N/R
9.	BP #9 – Sports Lighting	Custer Electric, Inc.	N/R
10.	BP #10 – Scoreboard		
11.	BP #11 – Turf	Sprinturf, Inc.	$ 0.00
12.	BP #12 – Stadium Seat	Irwin Seating Company	N/R
13.	BP #13 – Food Service	C&T Design & Equipment Co.	N/R
			$ 5,779.00

After your review, if this cost data is approved by your firm and the Owner, please advise in order for a Change Order to be initiated.

Sincerely,

KETTELHUT CONSTRUCTION, INC.

D. Alex Gonzalez
Executive Vice President

DAG: jas

Enclosure

cc: Field Office
City of Lafayette w/enclosure
Field Order 6617.040

AMERICAN STRUCTUREPOINT INC.

7260 Shadeland Station, Indianapolis, Indiana 46256
TEL 317.547.5580 FAX 317.543.0270

www.structurepoint.com

Proposal Request No. 007

Project Name: Loeb Stadium
Project Number: 2015.02410
Date: 02/03/2020

OWNER:
City of Lafayette, Indiana – Board of Public Works and Safety
20 North 6th Street
Lafayette, IN 47901

ARCHITECT / STRUCTURAL ENGINEER / CIVIL ENGINEER
American Structurepoint, Inc.
9025 River Road, Suite 200
Indianapolis, Indiana 46240
317.547.5580

MECHANICAL / PLUMBING / ELECTRICAL ENGINEER
Applied Engineering Services, Inc.
5975 Castle Creek Parkway N Drive, Suite 300
Indianapolis, IN 46250
317.810.4141

This Proposal Request is for informational and pricing purposes only and shall not be interpreted as instruction to perform the proposed Work indicated herein. Contractor shall detail all costs associated with the Work, itemized at a minimum by labor, material, overhead and profit. Specify whether the change in Work is an ADD, DEDUCT or NO CHANGE to the contract. After receiving pricing, the Architect shall direct the Contractor regarding how to proceed. If, and only if, the Work outlined in this Proposal Request causes no change in Contract sum or time, the Contractor may then proceed with the Work listed herein, at which point, said Work shall become part of the Contract Documents and modify the original Contract Documents and all prior changes as applicable. Requirements of the original Contract Documents and previous changes remain in effect except as modified by this Proposal Request.

The extent of this Proposal Request is as follows:

DOCUMENT MODIFICATIONS

PROJECT MANUAL

A. No Change

DRAWINGS

A. See clouded revisions on the attached drawings.
   1. C302 – Grading Plan – Updated Grading for Terrace Area at Home Bullpen
   2. C402, C404, C405 – Utility Plan – Updated Drainage at Terrace near Home Bullpen, showing additional underdrains at bullpen and dugout areas.

END OF PROPOSAL REQUEST.

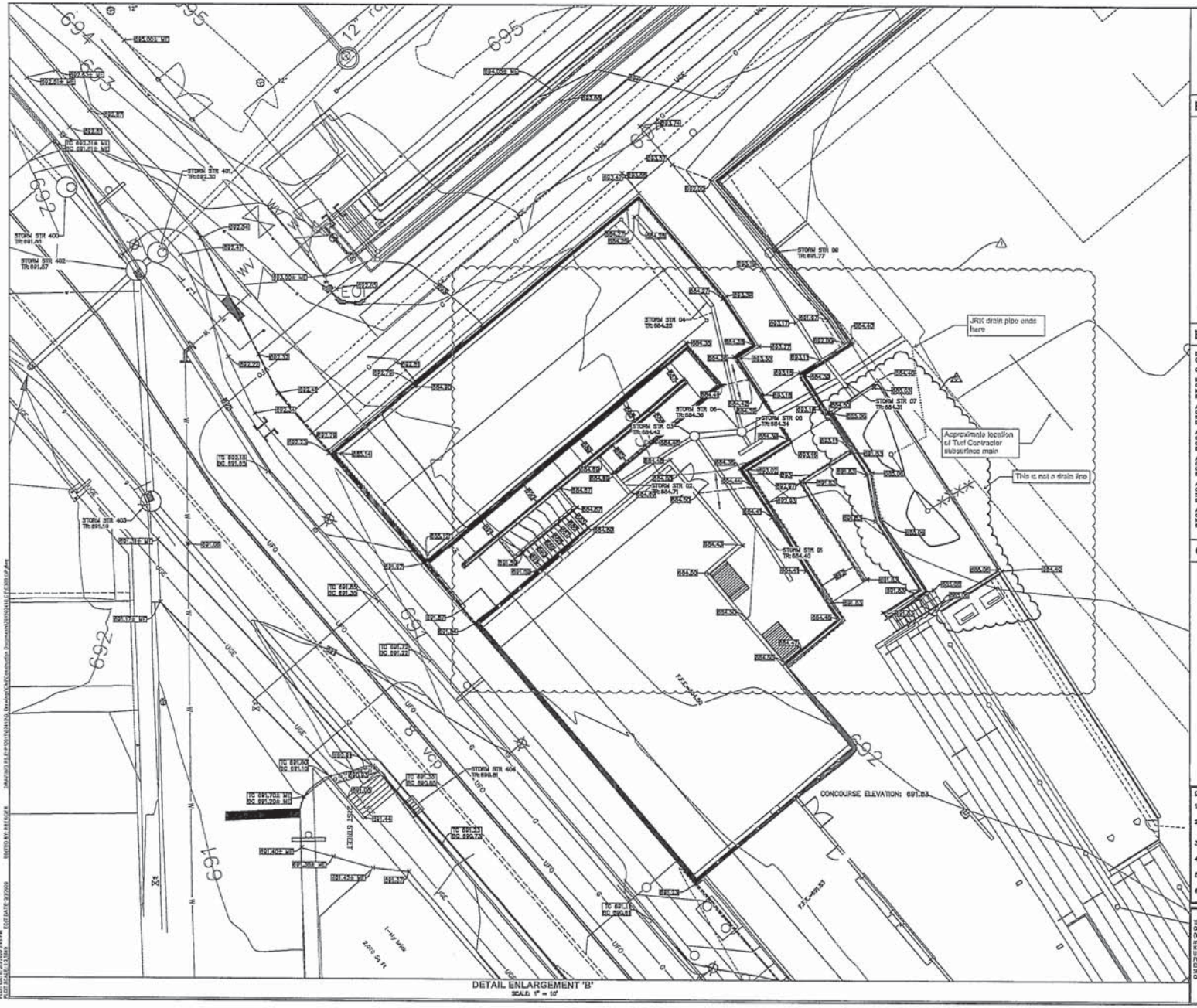

SCALE: 1"=10'

EXISTING LEGEND

AIR CONDITIONER
BOWED TOE CURB INLET
BEEHIVE INLET
BUSH
CURB INLET
CLEAN OUT
COMBINATION POLE
DRAINAGE MANHOLE
ELECTRIC MANHOLE
ELECTRIC METER BOX
ELECTRIC PEDESTAL
ELECTRIC CROSS BOX
FLAG POLE
FIRE HYDRANT
GROUND LIGHT
GAS METER
GAS VALVE
GUY WIRE
HOSE BIB
INLET
LID
LIGHT POLE
MAILBOX
MANHOLE
MONITORING WELL
MISC.
POST
APPROXIMATE SANITARY LATERAL LOCATION FROM LAFAYETTE GIS
POWER POLE
SATELLITE
SPRINKLER CONTROL VALVE
SIGN
SANITARY MANHOLE
STAND PIPE
STUMP
TELEPHONE HANDHOLE
TELEPHONE MARKER SIGN
TELEPHONE POLE
TRANSFORMER
TREE
TRAFFIC POLE
VENT
WATER METER
WATER MANHOLE
WATER VALVE
YARD LIGHT
OVERHEAD GRADE LINE
OVERHEAD ELECTRIC LINE
OVERHEAD TELEPHONE LINE
BURIED ELECTRIC LINE
BURIED GAS LINE
BURIED FIBER OPTIC LINE
BURIED TELEPHONE LINE
BURIED WATER LINE
BURIED UNKNOWN UTILITY LINE
TOP OF DIK ELEVATION
INVERT ELEVATION
PLASTIC PIPE
REINFORCED CONCRETE PIPE
CLAY PIPE

BENCHMARK DATA

BENCHMARK INFORMATION
(DATUM NAVD 88)

CONTROL BASED ON CPOS SOLUTION #16-62343306

BM BASE #100
CHAMFER INDIAN ON SW SIDE OF MAIN STREET; 600' SOUTH OF E. KOSSUTH STREET; 3' BEHIND WALK.
ELEV = 678.28

AS TBM 1
CHISELED SQUARE ON NORTH CORNER OF YELLOW LIGHT BASE, SOUTHWEST SIDE OF MAIN STREET ACROSS FROM FROZEN CUSTARD.
ELEV = 685.66

AS TBM 2
CHISELED "X" ON EAST BOLT OF FIRE HYDRANT, SOUTHWEST SIDE OF MAIN STREET, 600' NORTH OF E. PERDUE STREET.
ELEV = 686.16

AS TBM 3
CHISELED SQUARE ON SOUTH CORNER OF TRANS PAD AT NW SIDE OF COLEMAN PARK PUMP STATION BUILDING.
ELEV = 702.22

AS TBM 4
CHISELED "X" ON SOUTHEAST BOLT OF FIRE HYDRANT, NORTHWEST SIDE OF WALLACE AVENUE, ACROSS FROM TEN. COURT.
ELEV = 679.51

AS TBM 6
CHISELED SQUARE ON WEST CORNER OF TRANS PAD AT NORTHWEST CORNER OF BASEBALL FIELD BLEACHERS.
ELEV = 694.67

GRADING LEGEND

MC	MATCH EXISTING
FL	FLOWLINE
BC	BOTTOM OF CURB
TC	TOP OF CURB
HP	HIGH POINT
LP	LOW POINT
000	CONTOURS
	SWALE
TC 000.00 BC 000.00	CURB ELEVATIONS
000.00	SPOT ELEVATIONS
	FLOW ARROW

GRADING WALL DETAIL
NTS
TW: TOP OF WALL
FGU: FINISH GRADE AT UPPER SIDE OF WALL
FGL: FINISH GRADE AT LOWER SIDE OF WALL

GENERAL NOTES:

1. CONTRACTOR SHALL PROTECT AND NOT DESTROY THE PROPERTY CORNER MONUMENTS DURING CONSTRUCTION.
2. CONTRACTOR TO VERIFY LOCATION, SIZE AND DEPTH OF EXISTING UTILITIES PRIOR TO CONNECTIONS AND CONSTRUCTION. CONTACT ENGINEER IF VARIATION EXISTS.
3. WATER SLIDE INFORMATION IS SHOWN FOR REFERENCE FROM SCHOTT ASSOCIATES.
4. WATER MAIN IMPROVEMENTS SHOWN PER PLAN BY WESSLER.
5. STORM SEWER AND WALLACE AVENUE IMPROVEMENTS SHOWN PER PLAN BY STRUCTUREPOINT.
6. SEE SHEET C002 GENERAL NOTES FOR MORE INFORMATION.

!! CAUTION !!

THE LOCATIONS OF ALL EXISTING UNDERGROUND UTILITIES SHOWN ON THIS PLAN ARE BASED UPON ABOVE GROUND EVIDENCE (including, but not limited to, manholes, inlets, valves, and marks made upon the ground by others) AND ARE SPECULATIVE IN NATURE. THERE MAY ALSO BE OTHER EXISTING UNDERGROUND UTILITIES FOR WHICH THERE IS NO ABOVE GROUND EVIDENCE OR FOR WHICH NO ABOVE GROUND EVIDENCE WAS OBSERVED. THE EXACT LOCATIONS OF SAID EXISTING UNDERGROUND UTILITIES SHALL BE VERIFIED BY THE CONTRACTOR PRIOR TO ANY AND ALL CONSTRUCTION.

CALL TOLL FREE
"811" OR 1-800-382-5544
– INDIANA UNDERGROUND –

CITY OF LAFAYETTE
20 N. 6TH STREET
LAFAYETTE, IN, 47901
CONTACT: Jeremy Orchard

AMERICAN STRUCTUREPOINT INC.
7260 Shadeland Station | Indianapolis, Indiana 46256
TEL 317.543.0180 | FAX 317.543.0279
www.structurepoint.com

LOEB STADIUM

Main Street &
Wallace Avenue
City of Lafayette, Indiana

CERTIFIED BY

ISSUANCE INDEX	
DATE:	
06/13/2019	
PROJECT PHASE:	
CONSTRUCTION SET	

REVISION SCHEDULE		
NO.	DESCRIPTION	DATE
1	ASI001	09/14/17
2	RFI 043	10/25/19
3	RFI 034	11/21/19
4	REV 4 ASI002	01/08/20
5	PR007	02/03/20

Project Number 2015.02410

GRADING PLAN ENLARGEMENT 'B'

C302

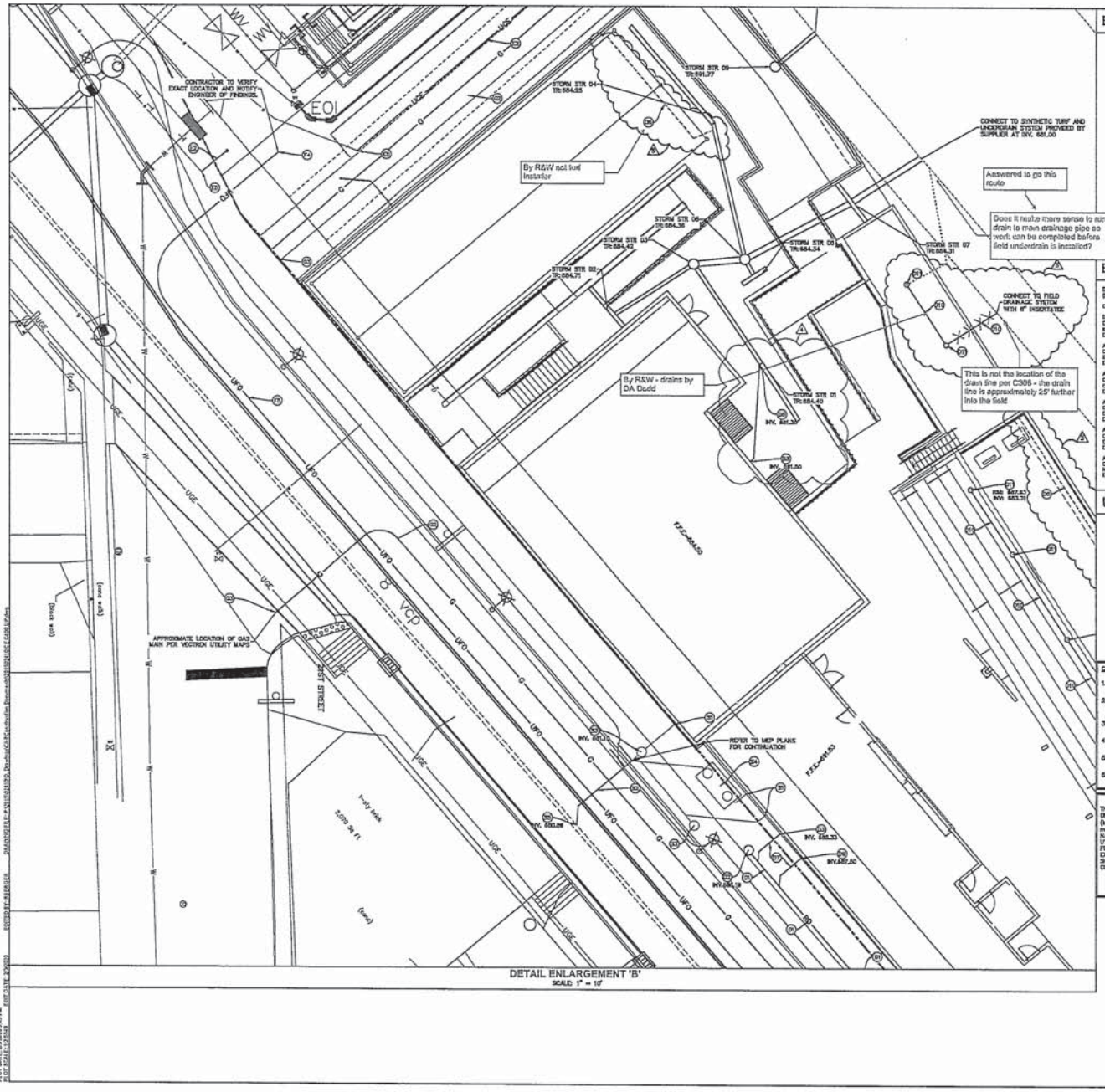

EXISTING LEGEND

AIR CONDITIONER
BOARD TOE GUARD INLET
BOLLARD
BUSH
CURB INLET
CLEAN OUT
COMBINATION POLE
DRAINAGE MANHOLE
ELECTRIC MANHOLE
ELECTRIC METER BOX
ELECTRIC PEDESTAL
ELECTRIC CROSS BOX
FLAG POLE
FIRE HYDRANT
GROUND LIGHT
GAS METER
GAS VALVE
GUY WIRE
HOSE BIB
INLET
LIG
LIGHT POLE
MAILBOX
MANHOLE
MONITORING WELL
PIVC
POST
APPROXIMATE SANITARY LATERAL LOCATION FROM LAFAYETTE DIS
POWER POLE
SATELLITE
SPRINKLER CONTROL VALVE
SIGN
SANITARY MANHOLE
STAND PIPE
STUMP
TELEPHONE MANHOLE
TELEPHONE MARKER SIGN
TELEPHONE POLE
TRANSFORMER
TREE
TRAFFIC POLE
VENT
WATER METER
WATER MANHOLE
WATER VALVE
YARD LIGHT
OVERHEAD GRADE LINE
OVERHEAD ELECTRIC LINE
OVERHEAD TELEPHONE LINE
BURIED ELECTRIC LINE
BURIED GAS LINE
BURIED FIBER OPTIC LINE
BURIED TELEPHONE LINE
BURIED WATER LINE
BURIED UNKNOWN UTILITY LINE
TOP OF PIPE ELEVATION
INVERT ELEVATION
PLASTIC PIPE
REINFORCED CONCRETE PIPE
CLAY PIPE

BENCHMARK DATA

ELEVATIONS INFORMATION (DATUM NAVD 88)

CONTROL BASED ON GPS3 SOLUTION #53-63543000

BM BASIC #100
CAPPED REBAR ON SW SIDE OF MAIN STREET, 400' SOUTH OF ℄ MISSOURI STREET, 3' BEHIND WALK.
ELEV =675.88

AIR TBM 1
CHISELED SQUARE ON NORTH CORNER OF YELLOW LIGHT BASE, SOUTHWEST SIDE OF MAIN STREET ACROSS FROM FROZEN CUSTARD.
ELEV =685.68

AIR TBM 2
CHISELED "X" ON EAST BOLT OF FIRE HYDRANT, SOUTHWEST SIDE OF MAIN STREET, 650' NORTH OF ℄ MISSOURI STREET.
ELEV =693.18

AIR TBM 3
CHISELED SQUARE ON SOUTH CORNER OF TRANS PAD AT NW SIDE OF COLUMBIAN PARK PUMP STATION BUILDING.
ELEV =702.22

AIR TBM 4
CHISELED "X" ON SOUTHEAST BOLT OF FIRE HYDRANT, NORTHWEST SIDE OF WALLACE AVENUE, ACROSS FROM REF. #2427.
ELEV =694.11

AIR TBM 5
CHISELED SQUARE ON WEST CORNER OF TRANS PAD AT NORTHWEST CORNER OF BASEBALL FIELD BLEACHERS.
ELEV =694.67

UTILITY LEGEND

CTC — ELECTRIC / TELECOMMUNICATIONS LINE
W — WATER LINE
FP — FIRE PROTECTION LINE
RD — ROOF DRAIN LINE
G — GAS LINE
SS — SANITARY LINE
SEWER STORM SEWER
4" DUAL WALL HDPE PAVEMENT UNDERDRAIN @ 0.25% MIN. SLOPE
GAS METER
ELECTRICAL TRANSFORMER
VALVE
WATER METER PIT
FIRE HYDRANT W/ ASSEMBLY

GENERAL NOTES

1. CONTRACTOR SHALL PROTECT AND NOT DESTROY THE PROPERTY CORNER MONUMENTS DURING CONSTRUCTION.
2. CONTRACTOR TO VERIFY LOCATION, SIZE AND DEPTH OF EXISTING UTILITIES PRIOR TO COMMENCING ANY CONSTRUCTION. CONTACT ENGINEER IF VARIATION EXISTS.
3. WATER SIDE INFORMATION IS SHOWN FOR REFERENCE FROM SCHMIDT ASSOCIATES.
4. WATER MAIN IMPROVEMENTS SHOWN PER PLAN BY VECTREN.
5. STORM SEWER AND WALLACE AVENUE IMPROVEMENTS SHOWN PER PLAN BY STRUCTUREPOINT.
6. SEE SHEET C002 GENERAL NOTES FOR MORE INFORMATION.

!! CAUTION !!

THE LOCATIONS OF ALL EXISTING UNDERGROUND UTILITIES SHOWN ON THIS PLAN ARE BASED UPON ABOVE GROUND EVIDENCE (including, but not limited to, manholes, inlets, valves, and marks made upon the ground by others) AND ARE SPECULATIVE IN NATURE. THERE MAY ALSO BE OTHER EXISTING UNDERGROUND UTILITIES FOR WHICH THERE IS NO ABOVE GROUND EVIDENCE OR FOR WHICH NO ABOVE GROUND EVIDENCE WAS OBSERVED. THE EXACT LOCATIONS OF SAID EXISTING UNDERGROUND UTILITIES SHALL BE VERIFIED BY THE CONTRACTOR PRIOR TO ANY AND ALL CONSTRUCTION.

CALL TOLL FREE
"811" OR 1-800-382-5544
– INDIANA UNDERGROUND –

SCALED 1"=10'

O KEYNOTES

SANITARY SEWER

S1. CONNECT TO PROPOSED BUILDING (REFER TO MEP PLANS FOR CONTINUATION)
S2. 8" PVC SDR-26 SANITARY LATERAL @ 1.04% MIN. SLOPE
S3. SANITARY CLEAN OUT
S4. GREASE INTERCEPTOR/OIL AND GRIT SEPARATOR (COMMERCIAL) PER CITY OF LAFAYETTE DETAILS (REFER TO MEP DRAWINGS)
S5. CONNECT TO EXISTING SANITARY SEWER MAIN

DRAINAGE/STORM SEWER

D1. 12" HDPE PIPE @ 0.35% MIN. SLOPE
D2. STORM CLEANOUT
D3. CONNECT TO PROPOSED BUILDING (REFER TO MEP PLANS FOR CONTINUATION)
D4. CONNECT TO EXISTING STORM STRUCTURE
D5. CONNECT TO PROPOSED STORM STRUCTURE
D6. 4" DUAL WALL HDPE PAVEMENT UNDERDRAIN @ 0.25% MIN. SLOPE
D7. 8" HDPE PIPE @ 1.0% MIN. SLOPE
D8. 8" HDPE PIPE @ 1.82% MIN. SLOPE
D9. CONNECT TO PROPOSED DOWNSPOUT BELOW GRADE (REFER TO ARCHITECTURAL PLANS FOR CONTINUATION)
D10. 6" HDPE PIPE AT 0.6% MIN. SLOPE
D11. 8" X 8" X 4" TEE (REFER TO MEP PLANS FOR EASTING DETAILS)
D12. CONNECT TO PROPOSED UNDERDRAIN SYSTEM (REFER TO FIELD TURF SPECS)
D13. 6" ECOMADRAIN SERIES 98 TRENCH DRAIN

WATERLINE

W1. FIRE DEPARTMENT CONNECTION
W2. 4" WATER SERVICE LINE
W3. 6" C900 PVC WATER LINE
W4. FIV
W5. TEE WITH THRUST BLOCKS
W6. BEND WITH THRUST BLOCKS
W7. CONNECT TO EXISTING WATER SERVICE LINE STUB-OUT
W8. CONNECT TO PROPOSED BUILDING (REFER TO MEP PLANS FOR CONTINUATION)

GAS

G1. GAS METER (REFER TO MEP PLANS FOR CONTINUATION.
G2. PROPOSED GAS SERVICE LINE
G3. CONNECT TO EXISTING GAS LINE (COORDINATE WITH UTILITY PROVIDER)

ELECTRIC / TELEPHONE / CABLE

E1. TRANSFORMER PAD (PER UTILITY STANDARDS
E2. ELECTRIC / TELEPHONE / CABLE SERVICE LINE
E3. CONNECT TO PROPOSED TRANSFORMER (COORDINATE WITH LOCAL UTILITY FOR PRIMARY SERVICE TO THE TRANSFORMER)
E4. CONNECT TO BUILDING (REFER TO MEP PLANS FOR CONTINUATION)
E5. CONNECT TO EXISTING ELECTRIC LINE
E6. PROPOSED RELOCATED TELEPHONE MANHOLE
E7. CONNECT TO EXISTING TELEPHONE LINE

FIBER OPTIC

F1. CONNECT TO PROPOSED BUILDING (REFER TO MEP PLANS FOR CONTINUATION)
F2. PROPOSED FIBER OPTIC SERVICE LINE
F3. CONNECT TO RELOCATED FIBER OPTIC LINE (COORDINATE WITH UTILITY PROVIDER)
F4. CONNECT TO EXISTING FIBER OPTIC LINE (COORDINATE WITH UTILITY PROVIDER)
F5. PROPOSED RELOCATED FIBER OPTIC LINE (REFER TO ZAYO PLANS FOR EXACT LOCATION)

MISCELLANEOUS

M1. POTENTIAL UTILITY CONFLICT (ALL WATER/SANITARY/STORM CROSSINGS TO HAVE A MINIMUM OF 18" VERTICAL CLEARANCE. CONTACT ENGINEER IF CONFLICTS EXIST. RELOCATE EXISTING UTILITIES AS REQUIRED.
M2. CONTRACTOR TO FIELD VERIFY LOCATION, DEPTH AND SIZE OF EXISTING UTILITIES TO ENSURE CONFLICTS DO NOT EXIST WITH PROPOSED UTILITIES.
M3. PROPOSED UTILITY CROSSING (ALL WATER/SANITARY/STORM CROSSINGS TO HAVE A MINIMUM OF 18" VERTICAL CLEARANCE. CONTACT ENGINEER IF CONFLICTS EXIST. RELOCATE EXISTING UTILITIES AS REQUIRED.

UTILITY CONTACTS

UTILITY	COMPANY	CONTACT	PHONE NO.
CABLE TELEVISION	COMCAST	JERRY SHUTTERS	(765) 455-5635
ELECTRIC	DUKE	BEN DAVIS	(765) 448-4012
GAS	VECTREN	STEVEN HINTON	(765) 448-5610
SANITARY SEWER	CITY OF LAFAYETTE	PETE GORBIN JR.	(765) 807-1500
TELEPHONE	FRONTIER COMMUNICATIONS	UNC ROEMMICH	(765) 423-3260
WATER	CITY OF LAFAYETTE	STEVE MOORE	(765) 807-1712

CITY OF LAFAYETTE
20 N. 6TH STREET
LAFAYETTE, IN, 47901
CONTACT: Jeremy Gerard

AMERICAN STRUCTUREPOINT INC.
7260 Shadeland Station | Indianapolis, Indiana 46256
TEL 317.547.5580 | FAX 317.543.0270
www.structurepoint.com

LOEB STADIUM

Main Street &
Wallace Avenue
City of Lafayette, Indiana

RODNEY N. SCHMIDT
REGISTERED
No. 11100062
STATE OF INDIANA
PROFESSIONAL ENGINEER

CERTIFIED BY

ISSUANCE INDEX
DATE: 06/12/2019
PROJECT PHASE: CONSTRUCTION SET

REVISION SCHEDULE		
NO.	DESCRIPTION	DATE
1	ASI001	09/14/17
2	RFI 043	10/25/19
3	RFI 034	11/21/19
4	REV 4 ASI002	01/08/20
5	PR007	02/03/20

Project Number 2015.02410

UTILITY PLAN ENLARGEMENT 'B'

C402

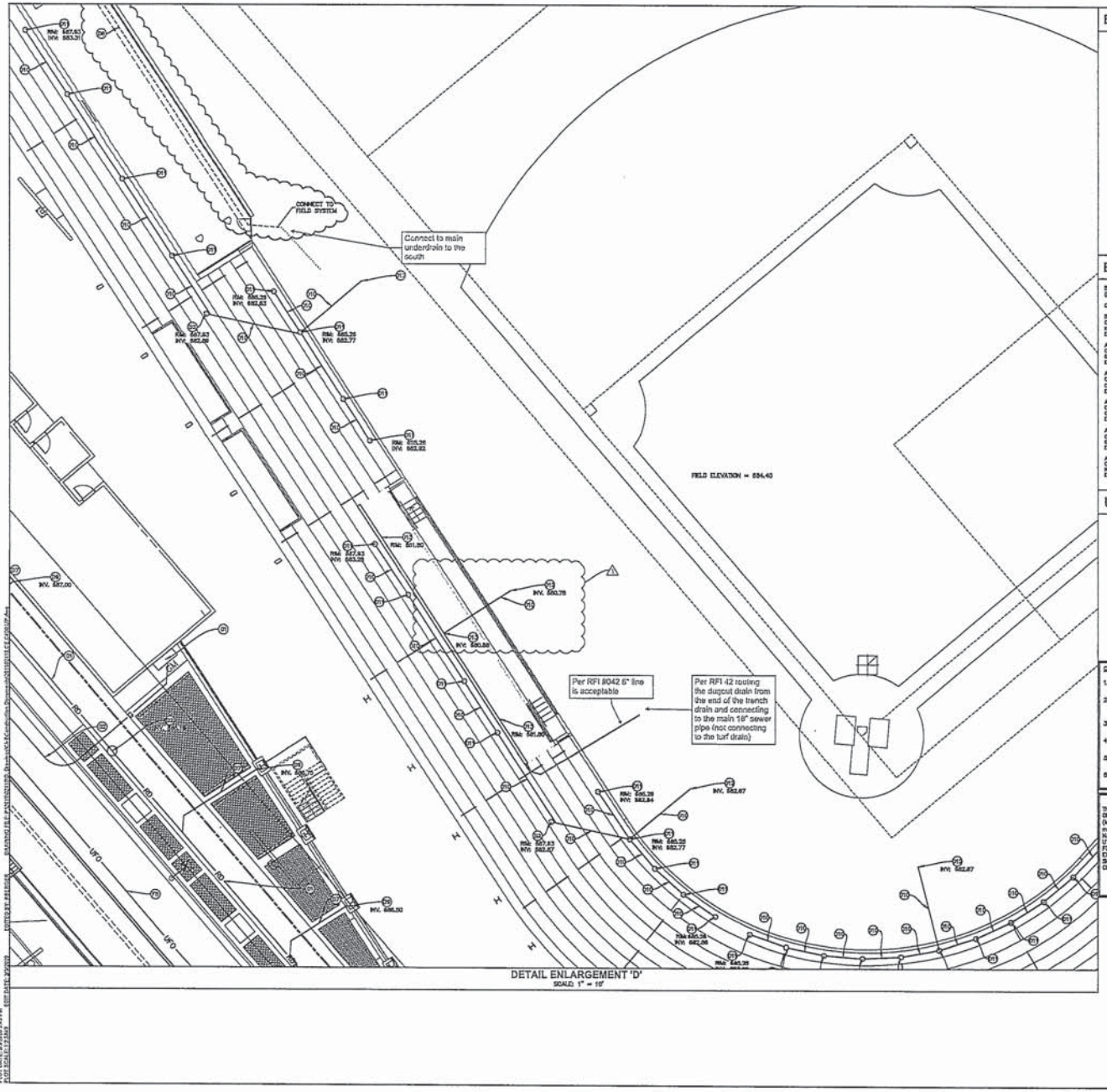

EXISTING LEGEND

AIR CONDITIONER
BEHIND THE CURB INLET
INCURVE INLET
BUSH
CURB INLET
CLEAN OUT
COMBINATION POLE
DRAINAGE MANHOLE
ELECTRIC MANHOLE
ELECTRIC METER BOX
ELECTRIC PEDESTAL
ELECTRIC CROSS BOX
FLAG POLE
FIRE HYDRANT
GROUND LIGHT
GAS METER
GAS VALVE
GUY WIRE
HOSE BIB
INLET
LID
LIGHT POLE
MAILBOX
MANHOLE
MONITORING WELL
PINC
POST
APPROXIMATE SANITARY LATERAL LOCATION FROM LAFAYETTE GIS
POWER POLE
SATELLITE
SPRINKLER CONTROL VALVE
SIGN
SANITARY MANHOLE
STAND PIPE
STUMP
TELEPHONE HANDHOLE
TELEPHONE MARKER SIGN
TELEPHONE POLE
TRANSFORMER
TREE
TRAFFIC POLE
VENT
WATER METER
WATER MANHOLE
WATER VALVE
YARD LIGHT
OVERHEAD BRAGE LINE
OVERHEAD ELECTRIC LINE
OVERHEAD TELEPHONE LINE
BURIED ELECTRIC LINE
BURIED GAS LINE
BURIED FIBER OPTIC LINE
BURIED TELEPHONE LINE
BURIED WATER LINE
TOP OF TYPE ELEVATION
INVERT ELEVATION
PLASTIC PIPE
REINFORCED CONCRETE PIPE
CLAY PIPE

BENCHMARK DATA

HORIZONTAL INFORMATION
(DATUM: NAD 83)

CONTROL BASED ON GPS% SOLUTION #3-6344360

BM BASE #101
CAPPED REBAR ON SW SIDE OF MAIN STREET, 4.00' SOUTH OF ℄ MISSION STREET, 3' BEHIND WALK.
ELEV =870.29

AS TRM 1
CHISELED SQUARE ON NORTH CORNER OF YELLOW LIGHT BASE, SOUTHWEST SIDE OF MAIN STREET ACROSS FROM FROZEN CUSTARD.
ELEV =868.88

AS TRM 2
CHISELED "X" ON EAST BOLT OF FIRE HYDRANT, SOUTHWEST SIDE OF MAIN STREET, 0.60' NORTH OF ℄ PERDUE STREET.
ELEV =880.19

AS TRM 3
CHISELED SQUARE ON SOUTH CORNER OF TRANS PAD AT NW SIDE OF COLUMBIAN PARK PUMP STATION BUILDING.
ELEV =702.22

AS TRM 4
CHISELED "X" ON SOUTHEAST BOLT OF FIRE HYDRANT, NORTHWEST SIDE OF WALLACE AVENUE, ACROSS FROM PER. #34421.
ELEV =691.11

AS TRM 5
CHISELED SQUARE ON WEST CORNER OF TRANS PAD AT NORTHWEST CORNER OF BASEBALL FIELD BLEACHERS.
ELEV =894.87

UTILITY LEGEND

ETC — ELECTRIC / TELECOMMUNICATIONS LINE
W — WATER LINE
FP — FIRE PROTECTION LINE
RD — ROOF DRAIN LINE
G — GAS LINE
SS — SANITARY LINE
SD — SEWER STORM SEWER
4" DUAL WALL HDPE PAVEMENT UNDERDRAIN @ 0.25% MIN. SLOPE
GAS METER
ELECTRICAL TRANSFORMER
VALVE
WATER METER PIT
FIRE HYDRANT W/ ASSEMBLY

GENERAL NOTES:

1. CONTRACTOR SHALL PROTECT AND NOT DISTURB THE PROPERTY CORNER MONUMENTS DURING CONSTRUCTION.
2. CONTRACTOR TO VERIFY LOCATION, SIZE AND DEPTH OF EXISTING UTILITIES PRIOR TO COMMENCING ANY CONSTRUCTION. CONTACT ENGINEER IF VARIATION EXISTS.
3. WATER SLIDE INFORMATION IS SHOWN FOR REFERENCE FROM SCHMIDT ASSOCIATES.
4. WATER MAIN IMPROVEMENTS SHOWN PER PLAN BY WESS,INC.
5. STORM SEWER AND WALLACE AVENUE IMPROVEMENTS SHOWN PER PLAN BY STRUCTUREPOINT.
6. SEE SHEET C002 GENERAL NOTES FOR MORE INFORMATION.

!! CAUTION !!

THE LOCATIONS OF ALL EXISTING UNDERGROUND UTILITIES SHOWN ON THIS PLAN ARE BASED UPON ABOVE GROUND EVIDENCE (including, but not limited to, manholes, inlets, valves, and marks made upon the ground by others) AND ARE SPECULATIVE IN NATURE. THERE MAY ALSO BE OTHER EXISTING UNDERGROUND UTILITIES FOR WHICH THERE IS NO ABOVE GROUND EVIDENCE OR FOR WHICH NO ABOVE GROUND EVIDENCE WAS OBSERVED. THE EXACT LOCATIONS OF SAID EXISTING UNDERGROUND UTILITIES SHALL BE VERIFIED BY THE CONTRACTOR PRIOR TO ANY AND ALL CONSTRUCTION.

CALL TOLL FREE
"811" OR 1-800-382-5544
– INDIANA UNDERGROUND –

SCALE: 1"=10'

O KEYNOTES

SANITARY SEWER

S1. CONNECT TO PROPOSED BUILDING (REFER TO MEP PLANS FOR CONTINUATION)
S2. 8" PVC SDR-26 SANITARY LATERAL @ 1.04% MIN. SLOPE
S3. SANITARY CLEAN OUT
S4. GREASE INTERCEPTOR/OIL AND GRIT SEPARATOR (COMMERCIAL) PER CITY OF LAFAYETTE DETAILS (REFER TO MEP DRAWINGS)
S5. CONNECT TO EXISTING SANITARY SEWER MAIN

DRAINAGE/STORM SEWER

D1. 12" HDPE PIPE @ 0.30% MIN. SLOPE
D2. STORM CLEANOUT
D3. CONNECT TO PROPOSED BUILDING (REFER TO MEP PLANS FOR CONTINUATION)
D4. CONNECT TO EXISTING STORM STRUCTURE
D5. CONNECT TO PROPOSED STORM STRUCTURE
D6. 4" DUAL WALL HDPE PAVEMENT UNDERDRAIN @ 0.25% MIN. SLOPE
D7. 8" HDPE PIPE @ 1.0% MIN. SLOPE
D8. 8" HDPE PIPE @ 1.80% MIN. SLOPE
D9. CONNECT TO PROPOSED DOWNSPOUT BELOW GRADE (REFER TO ARCHITECTURAL PLANS FOR CONTINUATION)
D10. 8" HDPE PIPE AT 0.8% MIN. SLOPE
D11. 8" X 8" X 4" TEE (REFER TO MEP PLANS FOR CASTING DETAILS)
D12. CONNECT TO PROPOSED UNDERDRAIN SYSTEM (REFER TO FIELD TURF SPECS)
D13. 8" ECONODRAIN SERIES #8 TRENCH DRAIN

WATERLINE

W1. FIRE DEPARTMENT CONNECTION
W2. 4" WATER SERVICE LINE
W3. 8" C900 PVC WATER LINE
W4. PIV
W5. TEE WITH THRUST BLOCKS
W6. BEND WITH THRUST BLOCKS
W7. CONNECT TO EXISTING WATER SERVICE LINE STUB-OUT
W8. CONNECT TO PROPOSED BUILDING (REFER TO MEP PLANS FOR CONTINUATION)

GAS

G1. GAS METER (REFER TO MEP PLANS FOR CONTINUATION.
G2. PROPOSED GAS SERVICE LINE
G3. CONNECT TO EXISTING GAS LINE (COORDINATE WITH UTILITY PROVIDER)

ELECTRIC / TELEPHONE / CABLE

E1. TRANSFORMER PAD (PER UTILITY STANDARDS
E2. ELECTRIC / TELEPHONE / CABLE SERVICE LINE
E3. CONNECT TO PROPOSED TRANSFORMER (COORDINATE WITH LOCAL UTILITY FOR PRIMARY SERVICE TO THE TRANSFORMER)
E4. CONNECT TO BUILDING (REFER TO MEP PLANS FOR CONTINUATION)
E5. CONNECT TO EXISTING ELECTRIC LINE
E6. PROPOSED RELOCATED TELEPHONE HANDHOLE
E7. CONNECT TO EXISTING TELEPHONE LINE

FIBER OPTIC

F1. CONNECT TO PROPOSED BUILDING (REFER TO MEP PLANS FOR CONTINUATION)
F2. PROPOSED FIBER OPTIC SERVICE LINE
F3. CONNECT TO RELOCATED FIBER OPTIC LINE (COORDINATE WITH UTILITY PROVIDER)
F4. CONNECT TO EXISTING FIBER OPTIC LINE (COORDINATE WITH UTILITY PROVIDER)
F5. PROPOSED RELOCATED FIBER OPTIC LINE (REFER TO ZAYO PLANS FOR EXACT LOCATION)

MISCELLANEOUS

M1. POTENTIAL UTILITY CONFLICT (ALL WATER/SANITARY/STORM CROSSINGS TO HAVE A MINIMUM OF 18" VERTICAL CLEARANCE. CONTACT ENGINEER IF CONFLICTS EXIST. RELOCATE EXISTING UTILITIES AS REQUIRED.
M2. CONTRACTOR TO FIELD VERIFY LOCATION, DEPTH AND SIZE OF EXISTING UTILITIES TO ENSURE CONFLICTS DO NOT EXIST WITH PROPOSED UTILITIES.
M3. PROPOSED UTILITY CROSSING (ALL WATER/SANITARY/STORM CROSSINGS TO HAVE A MINIMUM OF 18" VERTICAL CLEARANCE. CONTACT ENGINEER IF CONFLICTS EXIST. RELOCATE EXISTING UTILITIES AS REQUIRED.

UTILITY CONTACTS

UTILITY	COMPANY	CONTACT	PHONE NO.
CABLE TELEVISION	COMCAST	JERRY SHUTTETS	(765) 456-6930
ELECTRIC	DUKE	BEN DAVIS	(765) 448-4012
GAS	VECTREN	STEVEN HINTON	(765) 448-5610
SANITARY SEWER	CITY OF LAFAYETTE	PETE CORBIN JR.	(765) 807-1300
TELEPHONE	FRONTIER COMMUNICATIONS	MIKE BOEHNKER	(765) 423-3288
WATER	CITY OF LAFAYETTE	STEVE MOORE	(765) 807-1712

CITY OF LAFAYETTE
20 N. 6TH STREET
LAFAYETTE, IN. 47901
CONTACT: Jeremy Grenard

AMERICAN STRUCTUREPOINT INC.
7260 Shadeland Station | Indianapolis, Indiana 46256
TEL 317.547.5580 | FAX 317.543.0270
www.structurepoint.com

LOEB STADIUM

Main Street &
Wallace Avenue
City of Lafayette, Indiana

REGISTERED No. 11100062 STATE OF INDIANA PROFESSIONAL ENGINEER

CERTIFIED BY

ISSUANCE INDEX
DATE:
06/12/2019
PROJECT PHASE:
CONSTRUCTION SET

REVISION SCHEDULE		
NO.	DESCRIPTION	DATE
1	ASI001	09/14/17
2	RFI 043	10/25/18
3	RFI 034	11/21/18
4	REV 4 ASI002	01/08/20
5	PR007	02/03/20

Project Number 2015.02410

STADIUM SEATING DRAINAGE

C404

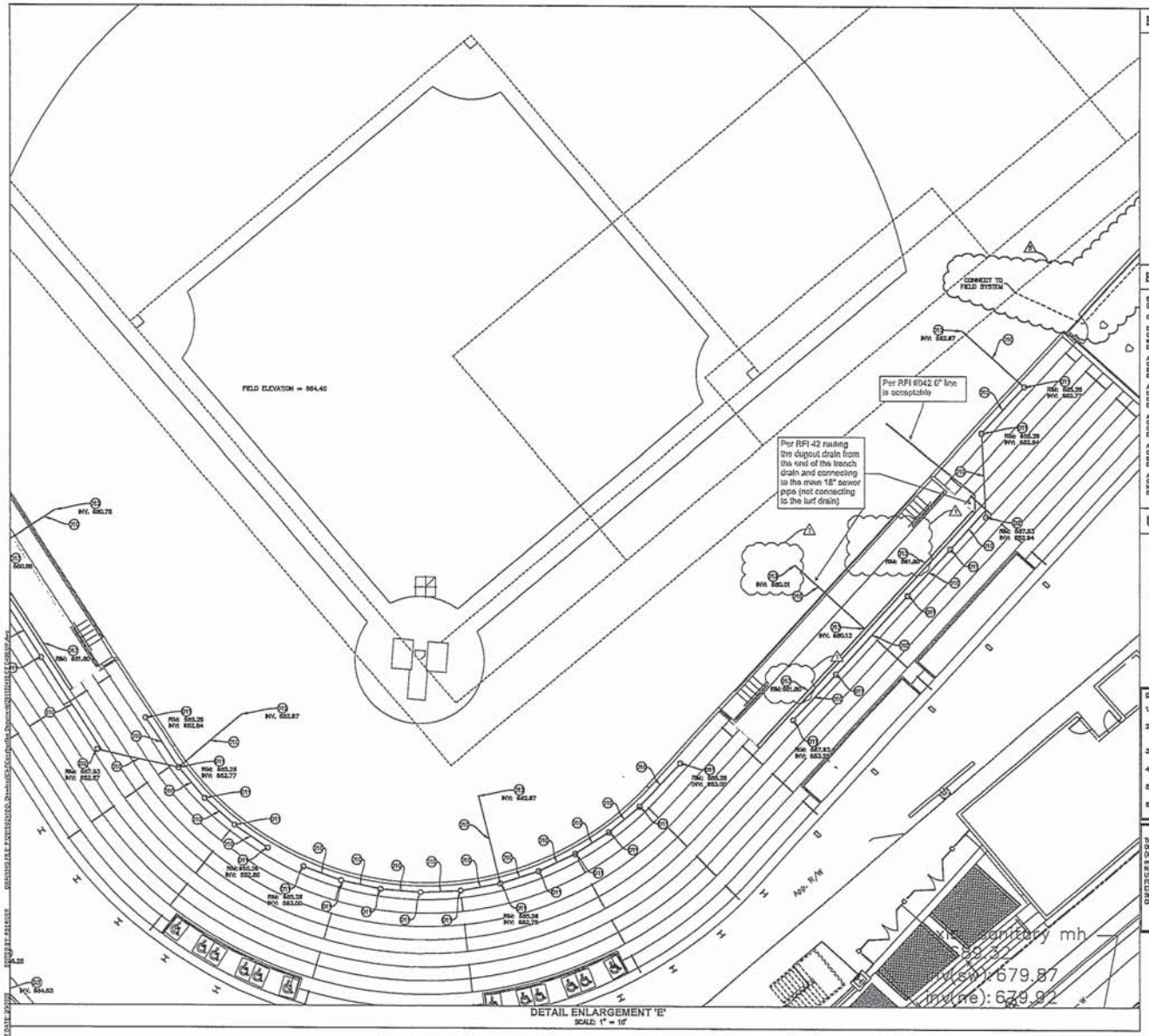

DETAIL ENLARGEMENT 'E'
SCALE: 1" = 10'

EXISTING LEGEND

AIR CONDITIONER
BOARD THE EDGE INLET
BRICKING INLET
BUSH
CURB INLET
CLEAN OUT
COMBINATION POLE
DRAINAGE MANHOLE
ELECTRIC MANHOLE
ELECTRIC METER BOX
ELECTRIC PEDESTAL
ELECTRIC CROSS BOX
FLAG POLE
FIRE HYDRANT
GROUND LIGHT
GAS METER
GAS VALVE
GUY WIRE
HOSE BIB
INLET
LID
LIGHT POLE
MAILBOX
MANHOLE
MONITORING WELL
PAVC
POST
APPROXIMATE SANITARY SEWER LATERAL LOCATION FROM LAFAYETTE GIS
POWER POLE
SATELLITE
SPRINKLER CONTROL VALVE
SIGN
SANITARY MANHOLE
STAND PIPE
STORM
TELEPHONE MANHOLE
TELEPHONE MARKER SIGN
TELEPHONE POLE
TRANSFORMER
TREE
TRAFFIC POLE
VENT
WATER METER
WATER MANHOLE
WATER VALVE
YARD LIGHT
OVERHEAD BRACE LINE
OVERHEAD ELECTRIC LINE
OVERHEAD TELEPHONE LINE
BURIED ELECTRIC LINE
BURIED GAS LINE
BURIED FIBER OPTIC LINE
BURIED TELEPHONE LINE
BURIED WATER LINE
BURIED UNKNOWN UTILITY LINE
TOP OF PIPE ELEVATION
INVERT ELEVATION
PLASTIC PIPE
REINFORCED CONCRETE PIPE
CLAY PIPE

BENCHMARK DATA

BENCHMARK INFORMATION
(DATUM NAVD 88)

CONTROL BASED ON GPS25 SOLUTION #18-453-43350

BM BASE #100
CAPPED REBAR ON SW SIDE OF MAIN STREET, 400' SOUTH OF S. MISSOURI STREET, 3' BEHIND WALK.
ELEV =470.58

AS TBM 1
CHISELED SQUARE ON NORTH CORNER OF YELLOW LIGHT BASE, SOUTHWEST SIDE OF MAIN STREET ACROSS FROM FRISEN CLOTHING.
ELEV =426.08

AS TBM 2
CHISELED "X" ON EAST BOLT OF FIRE HYDRANT, SOUTHWEST SIDE OF MAIN STREET, 400' NORTH OF S. MISSOURI STREET.
ELEV =435.18

AS TBM 3
CHISELED SQUARE ON SOUTH CORNER OF TRANS PAD AT NW SIDE OF COLUMBIAN PARK PUMP STATION BUILDING.
ELEV =703.23

AS TBM 4
CHISELED "X" ON SOUTHEAST BOLT OF FIRE HYDRANT, NORTHWEST SIDE OF WALLACE AVENUE, ACROSS FROM REF. #3427.
ELEV =695.13

AS TBM 5
CHISELED SQUARE ON WEST CORNER OF TRANS PAD AT NORTHWEST CORNER OF BASEBALL FIELD BLEACHERS.
ELEV =694.87

UTILITY LEGEND

ETC — ELECTRIC / TELECOMMUNICATIONS LINE
W — WATER LINE
FP — FIRE PROTECTION LINE
RD — ROOF DRAIN LINE
G — GAS LINE
SS — SANITARY LINE
SEWER STORM SEWER
4" DUAL WALL HDPE PAVEMENT UNDERDRAIN @ 0.25% MIN. SLOPE
GAS METER
ELECTRICAL TRANSFORMER
VALVE
WATER METER PIT
FIRE HYDRANT W/ ASSEMBLY

GENERAL NOTES:

1. CONTRACTOR SHALL PROTECT AND NOT DESTROY THE PROPERTY CORNER MONUMENTS DURING CONSTRUCTION.
2. CONTRACTOR TO VERIFY LOCATION, SIZE AND DEPTH OF EXISTING UTILITIES PRIOR TO COMMENCING ANY CONSTRUCTION. CONTACT ENGINEER IF VARIATION EXISTS.
3. WATER SLIDE INFORMATION IS SHOWN FOR REFERENCE FROM SCHMIDT ASSOCIATES.
4. WATER MAIN IMPROVEMENTS SHOWN PER PLAN BY VERSLUIS.
5. STORM SEWER AND WALLACE AVENUE IMPROVEMENTS SHOWN PER PLAN BY STRUCTUREPOINT.
6. SEE SHEET C002 GENERAL NOTES FOR MORE INFORMATION.

!! CAUTION !!

THE LOCATIONS OF ALL EXISTING UNDERGROUND UTILITIES SHOWN ON THIS PLAN ARE BASED UPON ABOVE GROUND EVIDENCE (including, but not limited to, manholes, inlets, valves, and marks made upon the ground by others) AND ARE SPECULATIVE IN NATURE. THERE MAY ALSO BE OTHER EXISTING UNDERGROUND UTILITIES FOR WHICH THERE IS NO ABOVE GROUND EVIDENCE OR FOR WHICH NO ABOVE GROUND EVIDENCE WAS OBSERVED. THE EXACT LOCATIONS OF SAID EXISTING UNDERGROUND UTILITIES SHALL BE VERIFIED BY THE CONTRACTOR PRIOR TO ANY AND ALL CONSTRUCTION.

CALL TOLL FREE
"811" OR 1-800-382-5544
– INDIANA UNDERGROUND –

SCALE: 1"=10'

O KEYNOTES

SANITARY SEWER

S1. CONNECT TO PROPOSED BUILDING (REFER TO MEP PLANS FOR CONTINUATION)
S2. 6" PVC SDR-26 SANITARY LATERAL @ 1.04% MIN. SLOPE
S3. SANITARY CLEAN OUT
S4. GREASE INTERCEPTOR/OIL AND GRIT SEPARATOR (COMMERCIAL) PER CITY OF LAFAYETTE DETAILS (REFER TO MEP DRAWINGS)
S5. CONNECT TO EXISTING SANITARY SEWER MAIN

DRAINAGE/STORM SEWER

D1. 12" HDPE PIPE @ 0.35% MIN. SLOPE
D2. STORM CLEANOUT
D3. CONNECT TO PROPOSED BUILDING (REFER TO MEP PLANS FOR CONTINUATION)
D4. CONNECT TO EXISTING STORM STRUCTURE
D5. CONNECT TO PROPOSED STORM STRUCTURE
D6. 4" DUAL WALL HDPE PAVEMENT UNDERDRAIN @ 0.25% MIN. SLOPE
D7. 6" HDPE PIPE @ 1.0% MIN. SLOPE
D8. 8" HDPE PIPE @ 1.90% MIN. SLOPE
D9. CONNECT TO PROPOSED DOWNSPOUT BELOW GRADE (REFER TO ARCHITECTURAL PLANS FOR CONTINUATION)
D10. 6" HDPE PIPE AT 0.8% MIN. SLOPE
D11. 8" X 8" X 4" TEE (REFER TO MEP PLANS FOR CASTING DETAILS)
D12. CONNECT TO PROPOSED UNDERDRAIN SYSTEM (REFER TO FIELD TURF SPECS)
D13. 6" ECONODRAIN SERIES 96 TRENCH DRAIN

WATERLINE

W1. FIRE DEPARTMENT CONNECTION
W2. 4" WATER SERVICE LINE
W3. 8" C900 PVC WATER LINE
W4. PIV
W5. TEE WITH THRUST BLOCKS
W6. BEND WITH THRUST BLOCKS
W7. CONNECT TO EXISTING WATER SERVICE LINE STUB-OUT
W8. CONNECT TO PROPOSED BUILDING (REFER TO MEP PLANS FOR CONTINUATION)

GAS

G1. GAS METER (REFER TO MEP PLANS FOR CONTINUATION.
G2. PROPOSED GAS SERVICE LINE
G3. CONNECT TO EXISTING GAS LINE (COORDINATE WITH UTILITY PROVIDER)

ELECTRIC / TELEPHONE / CABLE

E1. TRANSFORMER PAD (PER UTILITY STANDARDS
E2. ELECTRIC / TELEPHONE / CABLE SERVICE LINE
E3. CONNECT TO PROPOSED TRANSFORMER (COORDINATE WITH LOCAL UTILITY FOR PRIMARY SERVICE TO THE TRANSFORMER)
E4. CONNECT TO BUILDING (REFER TO MEP PLANS FOR CONTINUATION)
E5. CONNECT TO EXISTING ELECTRIC LINE
E6. PROPOSED RELOCATED TELEPHONE HANDHOLE
E7. CONNECT TO EXISTING TELEPHONE LINE

FIBER OPTIC

F1. CONNECT TO PROPOSED BUILDING (REFER TO MEP PLANS FOR CONTINUATION)
F2. PROPOSED FIBER OPTIC SERVICE LINE
F3. CONNECT TO RELOCATED FIBER OPTIC LINE (COORDINATE WITH UTILITY PROVIDER)
F4. CONNECT TO EXISTING FIBER OPTIC LINE (COORDINATE WITH UTILITY PROVIDER)
F5. PROPOSED RELOCATED FIBER OPTIC LINE (REFER TO ZAYO PLANS FOR EXACT LOCATION)

MISCELLANEOUS

M1. POTENTIAL UTILITY CONFLICT (ALL WATER/SANITARY/STORM CROSSINGS TO HAVE A MINIMUM OF 18" VERTICAL CLEARANCE. CONTACT ENGINEER IF CONFLICTS EXIST. RELOCATE EXISTING UTILITIES AS REQUIRED.
M2. CONTRACTOR TO FIELD VERIFY LOCATION, DEPTH AND SIZE OF EXISTING UTILITIES TO ENSURE CONFLICTS DO NOT EXIST WITH PROPOSED UTILITIES.
M3. PROPOSED UTILITY CORSSING (ALL WATER/SANITARY/STORM CROSSINGS TO HAVE A MINIMUM OF 18" VERTICAL CLEARANCE. CONTACT ENGINEER IF CONFLICTS EXIST. RELOCATE EXISTING UTILITIES AS REQUIRED.

UTILITY CONTACTS

UTILITY	COMPANY	CONTACT	PHONE NO.
CABLE TELEVISION	COMCAST	JERRY SHUTTERS	(765) 406-5635
ELECTRIC	DUKE	BEN DAVIS	(765) 446-4012
GAS	VECTREN	STEVEN HINTON	(765) 448-5810
SANITARY SEWER	CITY OF LAFAYETTE	PETE COREN JR.	(765) 807-1500
TELEPHONE	FRONTIER COMMUNICATIONS	MIKE BOESINGER	(765) 423-3288
WATER	CITY OF LAFAYETTE	STEVE MOORE	(765) 807-1712

CITY OF LAFAYETTE
20 N. 6TH STREET
LAFAYETTE, IN. 47901
CONTACT: Jeremy Gressel

AMERICAN STRUCTUREPOINT INC.
7260 Shadeland Station | Indianapolis, Indiana 46256
TEL 317.543.0380 | FAX 317.543.0379
www.structurepoint.com

LOEB STADIUM

Main Street &
Wallace Avenue
City of Lafayette, Indiana

BRANDY N. SCHMIDT
REGISTERED
No. 11100062
STATE OF INDIANA
PROFESSIONAL ENGINEER

CERTIFIED BY

ISSUANCE INDEX
DATE:
06/12/2019
PROJECT PHASE:
CONSTRUCTION SET

REVISION SCHEDULE		
NO.	DESCRIPTION	DATE
1	ASI001	09/14/17
2	RFI 043	10/25/19
3	RFI 034	11/21/19
4	REV 4 ASI002	01/08/20
5	PR007	02/03/20

Project Number 2015.02410

STADIUM SEATING DRAINAGE

C405

D.A. DODD

CORPORATE OFFICE
14 E. Michigan Street
P.O. Box 430
Rolling Prairie, IN 46371
Phone (219) 778-4302
FAX (219) 778-2981

1251 Paw Paw Avenue
Benton Harbor, MI 49022
Phone (269) 926-7873
FAX (269) 926-7871

3416 Rascal Drive
Lafayette, IN 47909
Phone (765) 448-3405
FAX (765) 448-7955

2516 N. Home Street
Mishawaka, IN 46545
Phone (574) 968-0589
FAX (574) 968-0590

February 12, 2020

Kettelhut Construction, Inc.
740 Sagamore Pkwy. South
Lafayette, IN 47903

Attention: Logan Brown

Re: Loeb Stadium Renovation
D.A. Dodd Job #LF19-013E CP-8

Please accept the cost to supply and install 2 additional DD-2 drains in the field terrace on the drainage piping provided and installed by other per PR #7 for the sum of **Three Hundred and Eight Dollars and 00/100 Cents.**

Subtotal	$280.00
Mark Up	$ 28.00
Total	$308.00

If you have any questions on the above, please do not hesitate to contact me at 765/448-3405 or by email at brettsanders@dadodd.com.

Respectfully,

Brett Sanders

Attachment

cc: File
Field

D.A.DODD

Job Name: Loeb Stadium Renovation

CP-8

D.A. Dodd Job LF19-013E

	Material			Labor	
Description	Quantity	Unit Price	Total	Labor Cost	Total Labor
Material					
	0	$0.00	$0.00	0	0
DD-2 add to field terrace	2	$41.33	$82.66	1.3	2.6
	0	$0.00	$0.00	0	0
	0	$0.00	$0.00	0	0
	0	$0.00	$0.00	0	0
	0	$0.00	$0.00	0	0
	0	$0.00	$0.00	0	0
	0	$0.00	$0.00	0	0
	0	$0.00	$0.00	0	0
	0	$0.00	$0.00	0	0
	0	$0.00	$0.00	0	0
	0	$0.00	$0.00	0	0
	0	$0.00	$0.00	0	0
	0	$0.00	$0.00	0	0
	0	$0.00	$0.00	0	0
	0	$0.00	$0.00	0	0
	0	$0.00	$0.00	0	0
	0	$0.00	$0.00	0	0
	0	$0.00	$0.00	0	0
	0	$0.00	$0.00	0	0
	0	$0.00	$0.00	0	0
	0	$0.00	$0.00	0	0
	0	$0.00	$0.00	0	0
	0	$0.00	$0.00	0	0
	0	$0.00	$0.00	0	0
	0	$0.00	$0.00	0	0
	0	$0.00	$0.00	0	0
	0	$0.00	$0.00	0	0
	0	$0.00	$0.00	0	0
	0	$0.00	$0.00	0	0
Material Total			**$82.66**		
Subcontractors					
Sheet Metal	1		$0.00		0
Controls	1		$0.00		0
Insulation	1		$0.00		0
Test and Balance	1		$0.00		0
			$0.00		0
			$0.00		0
			$0.00		0
			$0.00		0
			$0.00		0
Subcontractors Total			**$0.00**		2.60
				Labor Cost	$76.00
				Total Labor	$197.60

Sub Total	$280.26
10% Mark Up - Material	$8.27
5% Mark Up - Subs	$0.00
10% Mark Up - Labor	$19.76
Total	$308.29

CENTRAL SUPPLY COMPANY

Quotation

Central Supply Company - LAF
3980 State Road 38 East
LAFAYETTE, IN 47905
765-447-4800
Fax 317-899-6421

EXPIRATION DATE	QUOTE NUMBER
12/03/2019	S100277194

Central Supply Company - LAF
3980 State Road 38 East
LAFAYETTE, IN 47905
765-447-4800
Fax 317-899-6421

PAGE NO.: 1 of 1

QUOTE TO:

D A DODD INC
14 E MICHIGAN STREET
ROLLING PRAIRIE, IN 46371

SHIP TO:

D A DODD INC
3416 RASCAL DR
LAFAYETTE, IN 47905

CUSTOMER NUMBER	CUSTOMER PO NUMBER	JOB NAME / RELEASE NUMBER	SALESPERSON
3596	LOEB DRAINS		Bill Richmond

WRITER	SHIP VIA	TERMS	SHIP DATE	FREIGHT ALLOWED
Don Huckstep	OUR TRUCK	1% 10th Net 30th	12/02/2019	No

ORDER QTY	DESCRIPTION	UNIT PRICE	EXT PRICE
1ea	ZURN FD2210-PV4, 4" PVC FLOOR DRAIN WITH ADJ 5-3/16" ROUND NB STRAINER Pn: 18525 PLUS UPS FROM INDY	41.325/ea	41.33

Subtotal	41.33
S&H Charges	0.00
Estimated Tax	0.00
Amount Due	41.33

ZURN LIGHT COMMERCIAL LC®

FD2210 Adjustable Floor Drain

TAG _____

Dimensional Data (inches and [mm]) are Subject to Manufacturing Tolerances and Change Without Notice

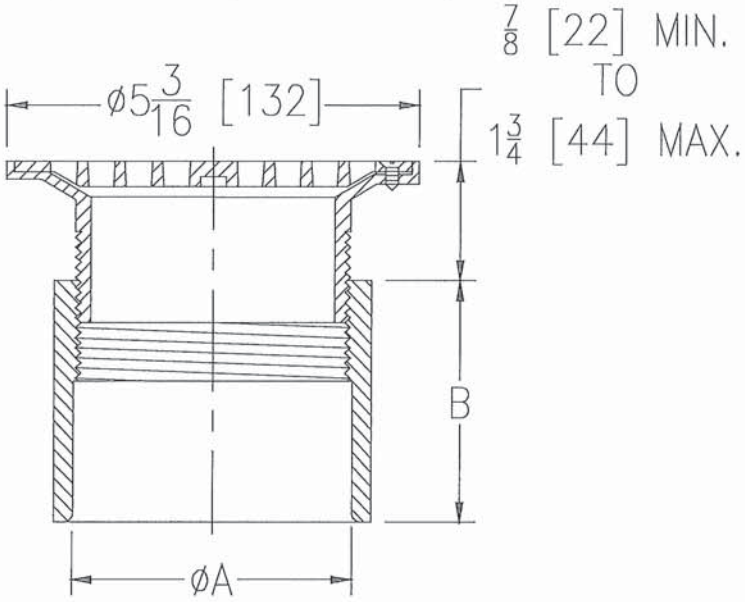

Product	'A" Outlet Connection	B	Grate Open Area Sq. In [cm²]
__ FD2210-PV2	2 [51] PVC Solvent Weld	1 7/8 [48]	7 [45]
__ FD2210-PV3	3 [76] PVC Solvent Weld	3 5/16 [84]	
✔ FD2210-PV4	4 [102] PVC Solvent Weld	3 5/16 [84]	
__ FD2210-AB2	2 [51] ABS Solvent Weld	1 7/8 [48]	
__ FD2210-AB3	3 [76] ABS Solvent Weld	3 5/16 [84]	
__ FD2210-AB4	4 [102] ABS Solvent Weld	3 5/16 [84]	

FD2210 Adjustable Floor Drain
Recommended for finished floor areas and designed for foot traffic and light-duty applications. Complete with PVC or ABS body, adjustable nickel bronze head and secured grate.

Options:

___ **-CP** Chrome Plated Top
✔ **-NT** Nickel Bronze Grate
___ **-VP** Vandal-Proof

Typical installation

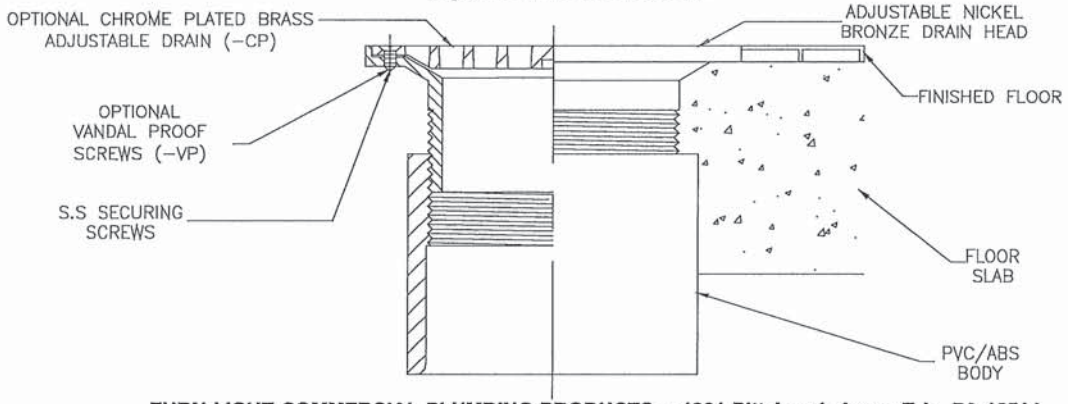

ZURN LIGHT COMMERCIAL PLUMBING PRODUCTS ♦ 1801 Pittsburgh Ave ♦ Erie, PA 16514
Phone: 814/455-0921 ♦ Fax: 814/454-7929 ♦ World Wide Web: www.zurn.com

Rev. B Date: 10/10/12 C.N. No. 124821
Dwg. No. 63746 Product No. FD2210

Approved by the Board of Public Works and Safety on the _____day of _____, 2020.

_____
Gary Henriott, President

_____
Cindy Murray, member

_____
Norm Childress, member

_____
Ronald Shriner, member

_____
Amy Moulton, member

ATTEST:

_____
Mindy Miller, Deputy Clerk

Date: _____

CHANGE ORDER

CONSTRUCTION MANAGER-ADVISER EDITION

Owner	☐
Construction Manager	☐
Architect	☐
Contractor	☐
Field	☐
Other	☐

PROJECT: *(Name and address)*
Loeb Stadium
Main Street and Wallace Street
Lafayette, Indiana

TO CONTRACTOR: *(Name and address)*
Huston Electric, Inc.
P. O. Box 4297
Lafayette, IN 47903-4297

CHANGE ORDER NO.: **BP-8-3**

INITIATION DATE: **December 10, 2019**

PROJECT NOS.: **6617**

CONTRACT FOR: **BP #8 - Electrical**

CONTRACT DATE: **June 4, 2019**

The Contract is changed as follows:

6617.021 - American Structurepoint Proposal Request #5, as it pertains to door hardware.	**Add**	**$589.00**
6617.020 - American Structure Point PR 4 - Lighting Changes - Flagpole downlight to an in-grade fixture	**Add**	**$7,909.00**
	TOTAL	**$8,498.00**

Not valid until signed by the Owner, Construction Manager, Architect and Contractor.

The original (Contract Sum) (~~Guaranteed Maximum Price~~) was……..	$	**2,097,366.00**
Net change by previously authorized Change Orders……..	$	**-81,536.00**
The (Contract Sum) (~~Guaranteed Maximum Price~~) prior to this Change Order was……	$	**2,015,830.00**
The (Contract Sum) (~~Guaranteed Maximum Price~~) will be (increased) (~~decreased~~) (~~unchanged~~) by this Change Order……..……..……..……..	$	**8,498.00**
The new (Contract Sum) (~~Guaranteed Maximum Price~~) including this Change Order will be……	$	**2,024,328.00**
The Contract Time will be (~~increased~~) (~~decreased~~) (unchanged) by ……..……		**(0) days**
The dated of Substantial Completion as of the date of this Change Order therefore is ……...……..……		**Unchanged**

NOTE: This summary does not reflect changes in the Contract Sum, Contract Time or Guaranteed Maximum Price which have been authorized by Construction Change Directive.

Kettelhut Construction, Inc.
CONSTRUCTION MANAGER

740 Sagamore Parkway S., Lafayette, IN 47905
ADDRESS

BY 12/12/2019 DATE

American Structurepoint, Inc.
ARCHITECT

7260 Shadeland Station, Indianapolis, IN 46256
ADDRESS

BY 12.11.19 DATE

Huston Electric, Inc.
CONTRACTOR

PO Box 4297, Lafayette, IN 47903-4297
ADDRESS

BY Brady McKinney 12/11/19 DATE

City of Lafayette, Indiana Board Public Works and Safety
OWNER

20 North 6th Street, Lafayette, IN 47901
ADDRESS

BY Jeremy L. Grenard 4/15/2020 DATE

KETTELHUT CONSTRUCTION, INC. General Contractor/Construction Manager

740 Sagamore Parkway South
Lafayette, IN 47905
(765) 447-2181
Fax (765) 447-7122

October 14, 2019

Mr. Dan McCloskey
American Structurepoint, Inc.
7260 Shadeland Station
Indianapolis, IN 46256

Re: Loeb Stadium Renovation
Lafayette, Indiana
Kettelhut Project No. 6617

Gentlemen:

Enclosed please find cost documentation from applicable Contractors regarding PR #4, as it pertains to lighting changes – Flagpole down light to an in-grade fixture. We have yet to receive responses from Contractors labeled N/R, but do not anticipate any other costs or credits than those shown below.

1.	BP #1 – General Trades	JR Kelly Co., Inc.	N/R
2.	BP #2 – Masonry	James Scharer Masonry, Inc.	N/R
3.	BP #3 – Steel	Almet, Inc.	N/R
4.	BP #4 – Roofing	Horning Roofing & Sheet Metal Co., LLC	N/R
5.	BP #5 – Alum.	Central Indiana Glass & Glazing, Inc.	N/R
6.	BP #6 – Fire Sprinklers	Dalmatian Fire, Division of Shambaugh & Son, L.P.	N/R
7.	BP #7 – Mechanical	D. A. Dodd, LLC	N/R
8.	BP #8 – Electrical	Huston Electric, Inc.	$ 7,909.00
9.	BP #9 – Sports Lighting	Custer Electric, Inc.	N/R
10.	BP #10 – Scoreboard		
11.	BP #11 – Turf	Sprinturf, Inc.	N/R
12.	BP #12 – Stadium Seat	Irwin Seating Company	N/R
13.	BP #13 – Food Service	C&T Design & Equipment Co.	N/R
			$ 7,909.00

After your review, if this cost data is approved by your firm and the Owner, please advise in order for a Change Order to be initiated.

Sincerely,

KETTELHUT CONSTRUCTION, INC.

D. Alex Gonzalez
Executive Vice President

DAG: jas

Enclosure

cc: Field Office
City of Lafayette w/enclosure
Field Order 6617.020

HUSTON
powering innovation

EXTRA WORK AUTHORIZATION # _____ CUSTOMER FIELD ORDER # PR04

SHEET # 1 OF 2

DATE: 10/11/2019
JOB # LC1179
PO # _____

CUSTOMER: Kettelhut
CONTRACT # 765-447-2181
PROJECT # _____

HUSTON REP: Brady McKinney

CUSTOMER REP: Alex Gonzalez

DESCRIPTION OF WORK: PR 04 light changes

LABOR

NAME	TRADE/Electrical	ACTUAL HOURS WORKED			PAY RATE			AMOUNT
		REG.	OT	DBL	REG	OT	DBL	
	Electrician	4			84	120	156	$ 336.00
								$ -
								$ -
								$ -
								$ -
								$ -
								$ -
								$ -
								$ -
								$ -
								$ -
								$ -
								$ -
								$ -
								$ -
TOTAL								$ 336.00

MATERIAL	QTY	COST	AMOUNT
lot lights	1	6,316.25	6,316.25
lot pole mounting	1	537.65	537.65
			0.00
			0.00
			0.00
			0.00
			0.00
			0.00
			0.00
			0.00
			0.00
			0.00
			0.00
			0.00
			0.00
			0.00
			0.00
			0.00
			0.00
			0.00
			0.00
			0.00
			0.00
			0.00
			0.00
			0.00
			0.00
		Subtotal	6,853.90
		7% sales tax	
		Total	$ 6,853.90

KCI FO 6617.020

HUSTON
powering innovation

EXTRA WORK AUTHORIZATION # 0 CUSTOMER FIELD ORDER # PR04

SHEET # 2 OF 2

SUBS, EQUIPMENT & TOOLS			
DESCRIPTION	TIME	RATE	AMOUNT
			$ -
		$ -	$ -
		$ -	$ -
		$ -	$ -
Subtotal			$ -
Mark-Up			$ -
TOTAL			$ -

FINAL COST BREAKDOWN		
Labor Total	$	336.00
Material Total	$	6,853.90
Subs, Equipment & Tools	$	-
Labor and Material Total	$	7,189.90
Insurance/Bond (1%)		
Safety (3%)		
Engineering (3%)		
Subtotal	$	7,189.90
Mark-Up 10%	$	718.99
Total	$	7,908.89

Remarks:	These fixtures mount a little different so they are more labor intensive.

HUSTON Rep. Signature

Customer Rep. Signature

Quote

ESL/SPECTRUM
LIGHTING / CONTROLS / DESIGN

ESL-Spectrum - South Bend
115 S. Main St
Mishawaka IN 46544
Phone: (574) 255-2151
Fax: (574) 255-5919
From: Steve Clearwater

Date: Oct 11, 2019

Project **Loeb Stadium - PR 004**
Location Lafayette IN
Quote INDY19-74956-4

To:

Huston Electric, Inc.
2723 Old Romney Rd.
Lafayette IN 47909
Phone: (765) 474-6115
Fax: (765) 474-6071

For
Bid Date Oct 11, 2019
Expires Nov 10, 2019
Architect: American Structure Point
Engineer: Applied Engineering Services

QTY	Type	MFG	Part	Price	UQ	
-10	F7	PRES	LC6SL 6LCSL14L35K8 B6	$91.80		
-10	F7	PRES	LC6SL	(included)		
-10	F7	PRES	6LCSL14L35K8	(included)		
-10	F7	PRES	B6	(included)		
5	F19	POLELED	POLE LED EXTENDED VERSION	$1,397.85		
Note			FIXTURE MOUNTED ON FLAG POLE - CONFIRM SIZE			
			OF POLE			
Note			REMOTE DRIVERS NEED TO BE MOUNTED IN POLE			
			IF THERE IS A HAND HOLE OR IN REMOTE WET			
			LISTED ENCLOSURE			
1			LOT FREIGHT FOR POLE LED	$245.00		
			SUBTOTAL			$6,316.25
5		POLECO	HALYARD MOUNTING - IF NEEDED	$107.53		
			SUBTOTAL			$537.65
			FREIGHT ALLOWED			

Terms and conditions of sale:

1. Pricing is based on above counts and complete bill of material. Any changes will require a new quotation.
2. Pricing is firm for 30 days from date of quotation and release of order within 60 days from date of quotation.
3. Subject to manufacturer's terms and conditions of sale. Standard warranties apply unless otherwise noted.
4. Prepayment may be required depending on manufacturer's terms and conditions or on custom orders.
5. Prices DO NOT include lamps, spare material, fuses, special finishes, mounting devices, installation, or applicable taxes unless otherwise noted.
6. ESL-Spectrum will NOT be responsible for errors resulting on orders released without receipt of signed approval drawings or errors missed in the approval process.
7. Pre-shipment of anchor bolts is available and will be plus freight.
8. Freight is not included on the order unless otherwise noted.
9. The purchaser is responsible for verifying voltage, quantities, finishes, and ceiling conditions.

KETTELHUT CONSTRUCTION, INC. General Contractor/Construction Manager

740 Sagamore Parkway South
Lafayette, IN 47905
(765) 447-2181
Fax (765) 447-7122

October 29, 2019

Mr. Dan McCloskey
American Structurepoint, Inc.
7260 Shadeland Station
Indianapolis, IN 46256

Re: Loeb Stadium Renovation
Lafayette, Indiana
Kettelhut Project No. 6617

Gentlemen:

Enclosed please find cost documentation from applicable Contractors regarding American Structurepoint Proposal Request #5, as it pertains to door hardware. We have yet to receive responses from Contractors labeled N/R, but do not anticipate any other costs or credits than those shown below.

1.	BP #1 – General Trades	JR Kelly Co., Inc.	$ 12,291.00
2.	BP #2 – Masonry	James Scharer Masonry, Inc.	N/R
3.	BP #3 – Steel	Almet, Inc.	N/R
4.	BP #4 – Roofing	Horning Roofing & Sheet Metal Co., LLC	N/R
5.	BP #5 – Alum.	Central Indiana Glass & Glazing, Inc.	N/R
6.	BP #6 – Fire Sprinklers	Dalmatian Fire, Division of Shambaugh & Son, L.P.	N/R
7.	BP #7 – Mechanical	D. A. Dodd, LLC	N/R
8.	BP #8 – Electrical	Huston Electric, Inc.	589.00
9.	BP #9 – Sports Lighting	Custer Electric, Inc.	N/R
10.	BP #10 – Scoreboard		
11.	BP #11 – Turf	Sprinturf, Inc.	N/R
12.	BP #12 – Stadium Seat	Irwin Seating Company	N/R
13.	BP #13 – Food Service	C&T Design & Equipment Co.	N/R
			$ 12,880.00

After your review, if this cost data is approved by your firm and the Owner, please advise in order for a Change Order to be initiated.

Sincerely,

KETTELHUT CONSTRUCTION, INC.

D. Alex Gonzalez
Executive Vice President

DAG: jas

Enclosure

cc: Field Office
City of Lafayette w/enclosure
Field Order 6617.021

HUSTON
powering innovation

EXTRA WORK AUTHORIZATION # _____ CUSTOMER FIELD ORDER # PR05

SHEET # 1 OF 2

DATE: 10/25/2019
JOB # LC1179
PO # _____

CUSTOMER: Kettelhut
CONTRACT # 765-447-2181
PROJECT # KCI FO 6617.021

HUSTON REP: Brady McKinney

CUSTOMER REP: Alex Gonzalez

DESCRIPTION OF WORK: PR 05 added power circuits fro door hardware. There were 2 circuts that were left out of the electrical plans to feed the card access panels in the press box. These 2 circuits will come out of the LM panel in room 207.

LABOR

NAME	TRADE/Electrical	ACTUAL HOURS WORKED			PAY RATE			AMOUNT
		REG.	OT	DBL	REG	OT	DBL	
	Electrician	5			84	120	156	$ 420.00
								$ -
								$ -
								$ -
								$ -
								$ -
								$ -
								$ -
								$ -
								$ -
								$ -
								$ -
								$ -
								$ -
								$ -
TOTAL								$ 420.00

MATERIAL	QTY	COST	AMOUNT
3/4 condult	60	0.75	45.00
THHN	360	0.14	50.40
supports	12	0.98	11.76
fittings	10	0.84	8.40
			0.00
			0.00
			0.00
			0.00
			0.00
			0.00
			0.00
			0.00
			0.00
			0.00
			0.00
			0.00
			0.00
			0.00
			0.00
			0.00
			0.00
			0.00
			0.00
			0.00
			0.00
			0.00
			0.00
		Subtotal	115.56
		7% sales tax	
		Total	$ 115.56

HUSTON
powering innovation

EXTRA WORK AUTHORIZATION # 0

CUSTOMER FIELD ORDER # PR05

SHEET # 2 OF 2

SUBS, EQUIPMENT & TOOLS			
DESCRIPTION	TIME	RATE	AMOUNT
			$ -
		$ -	$ -
		$ -	$ -
		$ -	$ -
Subtotal			$ -
Mark-Up			$ -
TOTAL			$ -

FINAL COST BREAKDOWN		
Labor Total	$	420.00
Material Total	$	115.56
Subs, Equipment & Tools	$	-
Labor and Material Total	$	535.56
Insurance/Bond (1%)		
Safety (3%)		
Engineering (3%)		
Subtotal	$	535.56
Mark-Up 10%	$	53.56
Total	$	589.12

Remarks:	Per the plans and specs Huston has Card reader rough in and (1) low voltage wire from the card reader back to the door control panel in each electrical room. These circuits in PR 5 are all accounted for other than these (2) which feed out of the LM panel in the press box room 207.

HUSTON Rep. Signature

Customer Rep. Signature

AMERICAN STRUCTUREPOINT INC.

7260 Shadeland Station, Indianapolis, Indiana 46256
TEL 317.547.5580 FAX 317.543.0270

www.structurepoint.com

Proposal Request No. 005

Project Name: Loeb Stadium
Project Number: 2015.02410
Date: 10/10/2019

OWNER:
City of Lafayette, Indiana – Board of Public Works and Safety
20 North 6th Street
Lafayette, IN 47901

ARCHITECT / STRUCTURAL ENGINEER / CIVIL ENGINEER
American Structurepoint, Inc.
9025 River Road, Suite 200
Indianapolis, Indiana 46240
317.547.5580

MECHANICAL / PLUMBING / ELECTRICAL ENGINEER
Applied Engineering Services, Inc.
5975 Castle Creek Parkway N Drive, Suite 300
Indianapolis, IN 46250
317.810.4141

This Proposal Request is for informational and pricing purposes only and shall not be interpreted as instruction to perform the proposed Work indicated herein. Contractor shall detail all costs associated with the Work, itemized at a minimum by labor, material, overhead and profit. Specify whether the change in Work is an ADD, DEDUCT or NO CHANGE to the contract. After receiving pricing, the Architect shall direct the Contractor regarding how to proceed. If, and only if, the Work outlined in this Proposal Request causes no change in Contract sum or time, the Contractor may then proceed with the Work listed herein, at which point, said Work shall become part of the Contract Documents and modify the original Contract Documents and all prior changes as applicable. Requirements of the original Contract Documents and previous changes remain in effect except as modified by this Proposal Request.

The extent of this Proposal Request is as follows:

DOCUMENT MODIFICATIONS

PROJECT MANUAL

A. Section 08 71 00 – Door Hardware
   1. Revisions made to the following hardware sets: 1.00, 1.01, 1.03, 1.04, 2.00, 2.01, 2.08, 3.00, 3.03, 3.04, 3.05, 3.06, 3.07, 4.01, 4.02, 4.07, 4.09, 5.00, 5.02, 5.05, 6.03, 6.05, 6.06

DRAWINGS

A. See clouded revisions on the attached drawings.
   A601 Revised door schedule to match updated specification.

END OF PROPOSAL REQUEST.

SECTION 087100 – DOOR HARDWARE

PART 1 - GENERAL

1.1 RELATED DOCUMENTS

A. Drawings and general provisions of the Contract, including General and Supplementary Conditions and Division 1 Specification Sections, apply to this Section.

1.2 SUMMARY

A. This Section includes commercial door hardware for the following:

1. Swinging doors.
2. Sliding doors.
3. Other doors to the extent indicated.

B. Door hardware includes, but is not necessarily limited to, the following:

1. Mechanical door hardware.
2. Electromechanical door hardware.
3. Cylinders specified for doors in other sections.

C. Related Sections:

1. Division 06 Section "Finish Carpentry".
2. Division 08 Section "Door Hardware Schedule".
3. Division 08 Section "Hollow Metal Doors and Frames".
4. Division 08 Section "Flush Wood Doors".
5. Division 08 Section "Fiberglass Doors",
6. Division 08 Section "Aluminum-Framed Entrances and Storefronts".
7. Division 08 Section "Access Control Hardware".
8. Division 28 Section "Access Control Hardware".
9. Division 28 Section "Access Control".

D. Codes and References: Comply with the version year adopted by the Authority Having Jurisdiction.

1. ANSI A117.1 - Accessible and Usable Buildings and Facilities.
2. ICC/IBC - International Building Code.
3. NFPA 70 - National Electrical Code.
4. NFPA 80 - Fire Doors and Windows.
5. NFPA 101 - Life Safety Code.
6. NFPA 105 - Installation of Smoke Door Assemblies.
7. State Building Codes, Local Amendments.

E. Standards: All hardware specified herein shall comply with the following industry standards:

1. ANSI/BHMA Certified Product Standards - A156 Series
2. UL10C – Positive Pressure Fire Tests of Door Assemblies

1.3 SUBMITTALS

A. Product Data: Manufacturer's product data sheets including installation details, material descriptions, dimensions of individual components and profiles, operational descriptions and finishes.

B. Door Hardware Schedule: Prepared by or under the supervision of supplier, detailing fabrication and assembly of door hardware, as well as procedures and diagrams. Coordinate the final Door Hardware Schedule with doors, frames, and related work to ensure proper size, thickness, hand, function, and finish of door hardware.

1. Format: Comply with scheduling sequence and vertical format in DHI's "Sequence and Format for the Hardware Schedule."

2. Organization: Organize the Door Hardware Schedule into door hardware sets indicating complete designations of every item required for each door or opening. Organize door hardware sets in same order as in the Door Hardware Sets at the end of Part 3. Submittals that do not follow the same format and order as the Door Hardware Sets will be rejected and subject to resubmission.

3. Content: Include the following information:

a. Type, style, function, size, label, hand, and finish of each door hardware item.
b. Manufacturer of each item.
c. Fastenings and other pertinent information.
d. Location of door hardware set, cross-referenced to Drawings, both on floor plans and in door and frame schedule.
e. Explanation of abbreviations, symbols, and codes contained in schedule.
f. Mounting locations for door hardware.
g. Door and frame sizes and materials.
h. Warranty information for each product.

4. Submittal Sequence: Submit the final Door Hardware Schedule at earliest possible date, particularly where approval of the Door Hardware Schedule must precede fabrication of other work that is critical in the Project construction schedule. Include Product Data, Samples, Shop Drawings of other work affected by door hardware, and other information essential to the coordinated review of the Door Hardware Schedule.

C. Shop Drawings: Details of electrified access control hardware indicating the following:

1. Wiring Diagrams: Upon receipt of approved schedules, submit detailed system wiring diagrams for power, signaling, monitoring, communication, and control of the access

control system electrified hardware. Differentiate between manufacturer-installed and field-installed wiring. Include the following:

a. Elevation diagram of each unique access controlled opening showing location and interconnection of major system components with respect to their placement in the respective door openings.
b. Complete (risers, point-to-point) access control system block wiring diagrams.
c. Wiring instructions for each electronic component scheduled herein.

2. Electrical Coordination: Coordinate with related sections the voltages and wiring details required at electrically controlled and operated hardware openings.

D. Proof of Certification: Provide copy of manufacturer(s) official certification or accreditation document indicating proof of status as a qualified and authorized provider of the primary Integrated Wiegand Access Control Products.

E. Keying Schedule: After a keying meeting with the owner has taken place prepare a separate keying schedule detailing final instructions. Submit the keying schedule in electronic format. Include keying system explanation, door numbers, key set symbols, hardware set numbers and special instructions. Owner must approve submitted keying schedule prior to the ordering of permanent cylinders/cores.

F. Informational Submittals:

1. Product Test Reports: Indicating compliance with cycle testing requirements, based on evaluation of comprehensive tests performed by manufacturer and witnessed by a qualified independent testing agency.

G. Operating and Maintenance Manuals: Provide manufacturers operating and maintenance manuals for each item comprising the complete door hardware installation in quantity as required in Division 01, Closeout Submittals.

1.4 QUALITY ASSURANCE

A. Manufacturers Qualifications: Engage qualified manufacturers with a minimum 5 years of documented experience in producing hardware and equipment similar to that indicated for this Project and that have a proven record of successful in-service performance.

B. Installer Qualifications: A minimum 3 years documented experience installing both standard and electrified door hardware similar in material, design, and extent to that indicated for this Project and whose work has resulted in construction with a record of successful in-service performance.

C. Door Hardware Supplier Qualifications: Experienced commercial door hardware distributors with a minimum 5 years documented experience supplying both mechanical and electromechanical hardware installations comparable in material, design, and extent to that indicated for this Project. Supplier recognized as a factory direct distributor by the manufacturers of the primary materials with a warehousing facility in Project's vicinity.

Supplier to have on staff a certified Architectural Hardware Consultant (AHC) available during the course of the Work to consult with Contractor, Architect, and Owner concerning both standard and electromechanical door hardware and keying.

D. Source Limitations: Obtain each type and variety of door hardware specified in this section from a single source unless otherwise indicated.

1. Electrified modifications or enhancements made to a source manufacturer's product line by a secondary or third party source will not be accepted.

2. Provide electromechanical door hardware from the same manufacturer as mechanical door hardware, unless otherwise indicated.

E. Each unit to bear third party permanent label demonstrating compliance with the referenced standards.

F. Keying Conference: Conduct conference to comply with requirements in Division 01 Section "Project Meetings." Keying conference to incorporate the following criteria into the final keying schedule document:

1. Function of building, purpose of each area and degree of security required.
2. Plans for existing and future key system expansion.
3. Requirements for key control storage and software.
4. Installation of permanent keys, cylinder cores and software.
5. Address and requirements for delivery of keys.

G. Pre-Submittal Conference: Conduct coordination conference in compliance with requirements in Division 01 Section "Project Meetings" with attendance by representatives of Supplier(s), Installer(s), and Contractor(s) to review proper methods and the procedures for receiving, handling, and installing door hardware.

1. Prior to installation of door hardware, conduct a project specific training meeting to instruct the installing contractors' personnel on the proper installation and adjustment of their respective products. Product training to be attended by installers of door hardware (including electromechanical hardware) for aluminum, hollow metal and wood doors. Training will include the use of installation manuals, hardware schedules, templates and physical product samples as required.
2. Inspect and discuss electrical roughing-in, power supply connections, and other preparatory work performed by other trades.
3. Review sequence of operation narratives for each unique access controlled opening.
4. Review and finalize construction schedule and verify availability of materials.
5. Review the required inspecting, testing, commissioning, and demonstration procedures

H. At completion of installation, provide written documentation that components were applied to manufacturer's instructions and recommendations and according to approved schedule.

1.5 DELIVERY, STORAGE, AND HANDLING

A. Inventory door hardware on receipt and provide secure lock-up and shelving for door hardware delivered to Project site. Do not store electronic access control hardware, software or accessories at Project site without prior authorization.

B. Tag each item or package separately with identification related to the final Door Hardware Schedule, and include basic installation instructions with each item or package.

C. Deliver, as applicable, permanent keys, cylinders, cores, access control credentials, software and related accessories directly to Owner via registered mail or overnight package service. Instructions for delivery to the Owner shall be established at the "Keying Conference".

1.6 COORDINATION

A. Templates: Obtain and distribute to the parties involved templates for doors, frames, and other work specified to be factory prepared for installing standard and electrified hardware. Check Shop Drawings of other work to confirm that adequate provisions are made for locating and installing hardware to comply with indicated requirements.

B. Door Hardware and Electrical Connections: Coordinate the layout and installation of scheduled electrified door hardware and related access control equipment with required connections to source power junction boxes, low voltage power supplies, detection and monitoring hardware, and fire and detection alarm systems.

C. Door and Frame Preparation: Doors and corresponding frames are to be prepared, reinforced and pre-wired (if applicable) to receive the installation of the specified electrified, monitoring, signaling and access control system hardware without additional in-field modifications.

1.7 WARRANTY

A. General Warranty: Reference Division 01, General Requirements. Special warranties specified in this Article shall not deprive Owner of other rights Owner may have under other provisions of the Contract Documents and shall be in addition to, and run concurrent with, other warranties made by Contractor under requirements of the Contract Documents.

B. Warranty Period: Written warranty, executed by manufacturer(s), agreeing to repair or replace components of standard and electrified door hardware that fails in materials or workmanship within specified warranty period after final acceptance by the Owner. Failures include, but are not limited to, the following:

1. Structural failures including excessive deflection, cracking, or breakage.
2. Faulty operation of the hardware.
3. Deterioration of metals, metal finishes, and other materials beyond normal weathering.
4. Electrical component defects and failures within the systems operation.

C. Standard Warranty Period: One year from date of Substantial Completion, unless otherwise indicated.

D. Special Warranty Periods:
   1. Ten years for manual surface door closer bodies.
   2. Two years for electromechanical door hardware.

1.8 MAINTENANCE SERVICE

A. Maintenance Tools and Instructions: Furnish a complete set of specialized tools and maintenance instructions as needed for Owner's continued adjustment, maintenance, and removal and replacement of door hardware.

PART 2 - PRODUCTS

2.1 SCHEDULED DOOR HARDWARE

A. General: Provide door hardware for each door to comply with requirements in Door Hardware Sets and each referenced section that products are to be supplied under.

B. Designations: Requirements for quantity, item, size, finish or color, grade, function, and other distinctive qualities of each type of door hardware are indicated in the Door Hardware Sets at the end of Part 3. Products are identified by using door hardware designations, as follows:

   1. Named Manufacturer's Products: Product designation and manufacturer are listed for each door hardware type required for the purpose of establishing requirements. Manufacturers' names are abbreviated in the Door Hardware Schedule.

C. Substitutions: Requests for substitution and product approval for inclusive mechanical and electromechanical door hardware in compliance with the specifications must be submitted in writing and in accordance with the procedures and time frames outlined in Division 01, Substitution Procedures. Approval of requests is at the discretion of the architect, owner, and their designated consultants.

2.2 HANGING DEVICES

A. Hinges: ANSI/BHMA A156.1 certified butt hinges with number of hinge knuckles and other options as specified in the Door Hardware Sets.

   1. Quantity: Provide the following hinge quantity:

      a. Two Hinges: For doors with heights up to 60 inches.
      b. Three Hinges: For doors with heights 61 to 90 inches.
      c. Four Hinges: For doors with heights 91 to 120 inches.
      d. For doors with heights more than 120 inches, provide 4 hinges, plus 1 hinge for every 30 inches of door height greater than 120 inches.

   2. Hinge Size: Provide the following, unless otherwise indicated, with hinge widths sized for door thickness and clearances required:

a. Widths up to 3'0": 4-1/2" standard or heavy weight as specified.
b. Sizes from 3'1" to 4'0": 5" standard or heavy weight as specified.

3. Hinge Weight and Base Material: Unless otherwise indicated, provide the following:

a. Exterior Doors: Heavy weight, non-ferrous, ball bearing or oil impregnated bearing hinges unless Hardware Sets indicate standard weight.
b. Interior Doors: Standard weight, steel, ball bearing or oil impregnated bearing hinges unless Hardware Sets indicate heavy weight.

4. Hinge Options: Comply with the following:

a. Non-removable Pins: Provide set screw in hinge barrel that, when tightened into a groove in hinge pin, prevents removal of pin while door is closed; for the all out-swinging lockable doors.

5. Manufacturers:

a. Bommer Industries (BO).
b. Hager Companies (HA).
c. McKinney Products; ASSA ABLOY Architectural Door Accessories (MK).

B. Continuous Geared Hinges: ANSI/BHMA A156.26 Grade 1-600 certified continuous geared hinge. with minimum 0.120-inch thick extruded 6060 T6 aluminum alloy hinge leaves and a minimum overall width of 4 inches. Hinges are non-handed, reversible and fabricated to template screw locations. Factory trim hinges to suit door height and prepare for electrical cut-outs. When continuous hinges are used with aluminum thermal break doors, provide hinges that are tested and approved to meet aluminum door manufacturer requirements and submit for approval.

1. Manufacturers:

a. Bommer Industries (BO).
b. Hager Companies (HA).
c. McKinney Products; ASSA ABLOY Architectural Door Accessories (MK).
d. Pemko Products; ASSA ABLOY Architectural Door Accessories (PE).

C. Pin and Barrel Continuous Hinges: ANSI/BHMA A156.26 Grade 1-600 certified pin and barrel continuous hinges with minimum 14 gauge Type 304 stainless steel hinge leaves, concealed teflon coated stainless pin, and twin self-lubricated nylon bearings at each knuckle separation. Factory trim hinges to suit door height and prepare for electrical cut-outs.

1. Manufacturers:

a. Hager Companies (HA).
b. Markar Products; ASSA ABLOY Architectural Door Accessories (MR).
c. McKinney Products; ASSA ABLOY Architectural Door Accessories (MK).
d. Pemko Products; ASSA ABLOY Architectural Door Accessories (PE).

2.3 POWER TRANSFER DEVICES

A. Concealed Quick Connect Electric Power Transfers: Provide concealed wiring pathway housing mortised into the door and frame for low voltage electrified door hardware. Furnish with Molex™ standardized plug connectors and sufficient number of concealed wires (up to 12) to accommodate the electrified functions specified in the Door Hardware Sets. Connectors plug directly to through-door wiring harnesses for connection to electric locking devices and power supplies. Wire nut connections are not acceptable. Use same manufacturer electric power transfer as the wire harness cable.

1. Manufacturers:

a. Pemko Products; ASSA ABLOY Architectural Door Accessories (PE) – EL-CEPT Series.
b. Securitron (SU) - EL-CEPT Series.
c. Stanley Hardware (ST) EPT-12C Series.

B. Electric Door Wire Harnesses: Provide electric/data transfer wiring harnesses with standardized plug connectors to accommodate up to twelve (12) wires. Connectors plug directly to through-door wiring harnesses for connection to electric locking devices and power supplies. Provide sufficient number and type of concealed wires to accommodate electric function of specified hardware. Provide a connector for through-door electronic locking devices and from hinge to junction box above the opening. Wire nut connections are not acceptable. Determine the length required for each electrified hardware component for the door type, size and construction, minimum of two per electrified opening. Use same manufacturer wire harness as the door mounted electromechanical hardware and frame-to-door power transfer hardware.

1. Provide one each of the following tools as part of the base bid contract:
   a. McKinney Products; ASSA ABLOY Architectural Door Accessories (MK) - Electrical Connecting Kit: QC-R001.
   b. McKinney Products; ASSA ABLOY Architectural Door Accessories (MK) - Connector Hand Tool: QC-R003.

2. Manufacturers:

a. Hager Companies (HA) - Quick Connect.
b. McKinney Products; ASSA ABLOY Architectural Door Accessories (MK) – QC-C Series.
c. Stanley Hardware (ST) – WH Series.

2.4 DOOR OPERATING TRIM

A. Flush Bolts and Surface Bolts: ANSI/BHMA A156.3 and A156.16, Grade 1, certified.

1. Flush bolts to be furnished with top rod of sufficient length to allow bolt retraction device location approximately six feet from the floor.
2. Furnish dust proof strikes for bottom bolts.
3. Surface bolts to be minimum 8" in length and U.L. listed for labeled fire doors and U.L. listed for windstorm components where applicable.

4. Provide related accessories (mounting brackets, strikes, coordinators, etc.) as required for appropriate installation and operation.

5. Manufacturers:

    a. Door Controls International (DC).
    b. Rockwood Products; ASSA ABLOY Architectural Door Accessories (RO).
    c. Trimco (TC).

B. Coordinators: ANSI/BHMA A156.3 certified door coordinators consisting of active-leaf, hold-open lever and inactive-leaf release trigger. Model as indicated in hardware sets.

1. Manufacturers:

    a. Door Controls International (DC).
    b. Rockwood Products; ASSA ABLOY Architectural Door Accessories (RO).
    c. Trimco (TC).

2.5 CYLINDERS AND KEYING

A. General: Cylinder manufacturer to have minimum (10) years' experience designing secured master key systems and have on record a published security keying system policy.

1. Manufacturers:

    a. Schlage Primus 2059, proprietary (SC).

B. Cylinders: Original manufacturer cylinders complying with the following:

1. Mortise Type: Threaded cylinders with rings and cams to suit hardware application.
2. Rim Type: Cylinders with back plate, flat-type vertical or horizontal tailpiece, and raised trim ring.
3. Bored-Lock Type: Cylinders with tailpieces to suit locks.
4. Mortise and rim cylinder collars to be solid and recessed to allow the cylinder face to be flush and be free spinning with matching finishes.
5. Keyway: Match Facility Standard.

C. Keying System: Each type of lock and cylinders to be factory keyed.

1. Conduct specified "Keying Conference" to define and document keying system instructions and requirements.
2. Furnish factory cut, nickel-silver large bow permanently inscribed with a visual key control number as directed by Owner.
3. Existing System: Key locks to Owner's existing system.

D. Key Quantity: Provide the following minimum number of keys:

1. Change Keys per Cylinder: Two (2)
2. Master Keys (per Master Key Level/Group): Five (5).

3. Construction Keys (where required): Ten (10).

E. Construction Keying: Provide construction master keyed cylinders.

F. Key Registration List (Bitting List):

1. Provide keying transcript list to Owner's representative in the proper format for importing into key control software.
2. Provide transcript list in writing or electronic file as directed by the Owner.

G. Key Control Cabinet: Provide a key control system including envelopes, labels, and tags with self-locking key clips, receipt forms, 3-way visible card index, temporary markers, permanent markers, and standard metal cabinet. Key control cabinet shall have expansion capacity of 150% of the number of locks required for the project.

1. Manufacturers:

a. Lund Equipment (LU).
b. MMF Industries (MM).
c. Telkee (TK).

2.6 CREDENTIALS – ACCESS CONTROL PANELS – SOFTWARE

A. Reference Division 28

2.7 MECHANICAL LOCKS AND LATCHING DEVICES

A. Mortise Locksets, Grade 1 (Heavy Duty): ANSI/BHMA A156.13, Series 1000, Operational Grade 1 certified. Locksets are to be manufactured with a corrosion resistant steel case and be field-reversible for handing without disassembly of the lock body.
1. Manufacturers:
a. Sargent Manufacturing (SA) – 8200 Series: "LNMJ"

2.8 LOCK AND LATCH STRIKES

A. Strikes: Provide manufacturer's standard strike with strike box for each latch or lock bolt, with curved lip extended to protect frame, finished to match door hardware set, unless otherwise indicated, and as follows:

1. Flat-Lip Strikes: For locks with three-piece antifriction latchbolts, as recommended by manufacturer.
2. Extra-Long-Lip Strikes: For locks used on frames with applied wood casing trim.
3. Aluminum-Frame Strike Box: Provide manufacturer's special strike box fabricated for aluminum framing.
4. Double-lipped strikes: For locks at double acting doors. Furnish with retractable stop for rescue hardware applications.

B. Standards: Comply with the following:

1. Strikes for Mortise Locks and Latches: BHMA A156.13.
2. Strikes for Bored Locks and Latches: BHMA A156.2.
3. Strikes for Auxiliary Deadlocks: BHMA A156.36.
4. Dustproof Strikes: BHMA A156.16.

2.9 CONVENTIONAL EXIT DEVICES

A. General Requirements: All exit devices specified herein shall meet or exceed the following criteria:

1. At doors not requiring a fire rating, provide devices complying with NFPA 101 and listed and labeled for "Panic Hardware" according to UL305. Provide proper fasteners as required by manufacturer including sex nuts and bolts at openings specified in the Hardware Sets.

2. Where exit devices are required on fire rated doors, provide devices complying with NFPA 80 and with UL labeling indicating "Fire Exit Hardware". Provide devices with the proper fasteners for installation as tested and listed by UL. Consult manufacturer's catalog and template book for specific requirements.

3. Except on fire rated doors, provide exit devices with hex key dogging device to hold the pushbar and latch in a retracted position. Provide optional keyed cylinder dogging on devices where specified in Hardware Sets.

4. Devices must fit flat against the door face with no gap that permits unauthorized dogging of the push bar. The addition of filler strips is required in any case where the door light extends behind the device as in a full glass configuration.

5. Flush End Caps: Provide flush end caps made of architectural metal in the same finish as the devices as in the Hardware Sets. Plastic end caps will not be acceptable.

6. Electromechanical Options: Subject to same compliance standards and requirements as mechanical exit devices, electrified devices to be of type and design as specified in hardware sets. Include any specific controllers when conventional power supplies are not sufficient to provide the proper inrush current.

7. Motorized Electric Latch Retraction: Devices with an electric latch retraction feature must use motors which have a maximum current draw of 600mA. Solenoid driven latch retraction is not acceptable.

8. Lever Operating Trim: Where exit devices require lever trim, furnish manufacturer's heavy duty escutcheon trim with threaded studs for thru-bolts.

    a. Lock Trim Design: As indicated in Hardware Sets, provide finishes and designs to match that of the specified locksets.
    b. Where function of exit device requires a cylinder, provide a cylinder (Rim or Mortise) as specified in Hardware Sets.

9. Vertical Rod Exit Devices: Where surface or concealed vertical rod exit devices are used at interior openings, provide as less bottom rod (LBR) unless otherwise indicated. Provide dust proof strikes where thermal pins are required to project into the floor.

10. Narrow Stile Applications: At doors constructed with narrow stiles, or as specified in Hardware Sets, provide devices designed for maximum 2" wide stiles.

11. Extended cycle test: Devices to have been cycle tested in ordinance with ANSI/BHMA 156.3 requirements to 9 million cycles.

12. Extended cycle test: Devices to have been cycle tested in ordinance with ANSI/BHMA 156.3 requirements to 50 million cycles.

13. Rail Sizing: Provide exit device rails factory sized for proper door width application.

14. Through Bolt Installation: For exit devices and trim as indicated in Door Hardware Sets.

B. Conventional Push Rail Exit Devices (Heavy Duty): ANSI/BHMA A156.3, Grade 1 certified panic and fire exit hardware devices furnished in the functions specified in the Hardware Sets. Exit device latch to be stainless steel, pullman type, with deadlock feature.

1. Manufacturers:

a. Sargent Manufacturing (SA) - 80 Series.
b. Stanley Precision (PR) - Apex 2000 Series.

2.10 ELECTRIC STRIKES

A. Standard Electric Strikes: Heavy duty, cylindrical and mortise lock electric strikes conforming to ANSI/BHMA A156.31, Grade 1, UL listed for both Burglary Resistance and for use on fire rated door assemblies. Stainless steel construction with dual interlocking plunger design tested to exceed 3000 lbs. of static strength and 350 ft-lbs. of dynamic strength. Strikes tested for a minimum 1 million operating cycles. Provide strikes with 12 or 24 VDC capability and supplied standard as fail-secure unless otherwise specified. Provide latchbolt and latchbolt strike monitoring indicating both the position of the latchbolt and locked condition of the strike where specified.

1. Manufacturers:
a. Folger Adam EDC (FO).
b. HES (HS).

2.11 DOOR CLOSERS

A. All door closers specified herein shall meet or exceed the following criteria:

1. General: Door closers to be from one manufacturer, matching in design and style, with the same type door preparations and templates regardless of application or spring size. Closers to be non-handed with full sized covers including installation and adjusting information on inside of cover.

2. Standards: Closers to comply with UL-10C for Positive Pressure Fire Test and be U.L. listed for use of fire rated doors.

3. Cycle Testing: Provide closers which have surpassed 15 million cycles in a test witnessed and verified by UL.

4. Size of Units: Comply with manufacturer's written recommendations for sizing of door closers depending on size of door, exposure to weather, and anticipated frequency of use. Where closers are indicated for doors required to be accessible to the physically handicapped, provide units complying with ANSI ICC/A117.1.

5. Closer Arms: Provide heavy duty, forged steel closer arms unless otherwise indicated in Hardware Sets.

6. Closers shall not be installed on exterior or corridor side of doors; where possible install closers on door for optimum aesthetics.

7. Closer Accessories: Provide door closer accessories including custom templates, special mounting brackets, spacers and drop plates as required for proper installation. Provide through-bolt and security type fasteners as specified in the hardware sets.

B. Door Closers, Surface Mounted (Heavy Duty): ANSI/BHMA A156.4, Grade 1 surface mounted, heavy duty door closers with complete spring power adjustment, sizes 1 thru 6; and fully operational adjustable according to door size, frequency of use, and opening force. Closers to be rack and pinion type, one piece cast iron or aluminum alloy body construction, with adjustable backcheck and separate non-critical valves for closing sweep and latch speed control. Provide non-handed units standard.

1. Manufacturers:

a. Sargent Manufacturing (SA) - 351 Series.
b. Norton Door Controls (NO) - 9500 Series.
c. LCN (LC) – 4040XP

2.12 ARCHITECTURAL TRIM

A. Door Protective Trim

1. General: Door protective trim units to be of type and design as specified below or in the Hardware Sets.

2. Size: Fabricate protection plates (kick, armor, or mop) not more than 2" less than door width (LDW) on stop side of single doors and 1" LDW on stop side of pairs of doors, and not more than 1" less than door width on pull side. Coordinate and provide proper width and height as required where conflicting hardware dictates. Height to be as specified in the Hardware Sets.

3. Where plates are applied to fire rated doors with the top of the plate more than 16" above the bottom of the door, provide plates complying with NFPA 80. Consult manufacturer's catalog and template book for specific requirements for size and applications.

4. Protection Plates: ANSI/BHMA A156.6 certified protection plates (kick, armor, or mop), fabricated from the following:

    a. Stainless Steel: 300 grade, 050-inch thick.

5. Options and fasteners: Provide manufacturer's designated fastener type as specified in the Hardware Sets. Provide countersunk screw holes.

6. Manufacturers:

    a. Hiawatha, Inc. (HI).
    b. Rockwood Products; ASSA ABLOY Architectural Door Accessories (RO).
    c. Trimco (TC).

2.13 DOOR STOPS AND HOLDERS

A. General: Door stops and holders to be of type and design as specified below or in the Hardware Sets.

B. Door Stops and Bumpers: ANSI/BHMA A156.16, Grade 1 certified door stops and wall bumpers. Provide wall bumpers, either convex or concave types with anchorage as indicated, unless floor or other types of door stops are specified in Hardware Sets. Do not mount floor stops where they will impede traffic. Where floor or wall bumpers are not appropriate, provide overhead type stops and holders.

1. Manufacturers:

    a. Hiawatha, Inc. (HI).
    b. Rockwood Products; ASSA ABLOY Architectural Door Accessories (RO).
    c. Trimco (TC).

C. Overhead Door Stops and Holders: ANSI/BHMA A156.6, Grade 1 certified overhead stops and holders to be surface or concealed types as indicated in Hardware Sets. Track, slide, arm and jamb bracket to be constructed of extruded bronze and shock absorber spring of heavy tempered steel. Provide non-handed design with mounting brackets as required for proper operation and function.

1. Manufacturers:

    a. Rixson Door Controls (RF).
    b. Rockwood Products; ASSA ABLOY Architectural Door Accessories (RO).
    c. Sargent Manufacturing (SA).

2.14 ARCHITECTURAL SEALS

A. General: Thresholds, weatherstripping, and gasket seals to be of type and design as specified below or in the Hardware Sets. Provide continuous weatherstrip gasketing on exterior doors and provide smoke, light, or sound gasketing on interior doors where indicated. At exterior applications provide non-corrosive fasteners and elsewhere where indicated.

B. Smoke Labeled Gasketing: Assemblies complying with NFPA 105 that are listed and labeled by a testing and inspecting agency acceptable to authorities having jurisdiction, for smoke control ratings indicated, based on testing according to UL 1784.

1. Provide smoke labeled perimeter gasketing at all smoke labeled openings.

C. Fire Labeled Gasketing: Assemblies complying with NFPA 80 that are listed and labeled by a testing and inspecting agency acceptable to authorities having jurisdiction, for fire ratings indicated, based on testing according to UL-10C.

1. Provide intumescent seals as indicated to meet UL10C Standard for Positive Pressure Fire Tests of Door Assemblies, and NPFA 252, Standard Methods of Fire Tests of Door Assemblies.

D. Sound-Rated Gasketing: Assemblies that are listed and labeled by a testing and inspecting agency, for sound ratings indicated.

E. Replaceable Seal Strips: Provide only those units where resilient or flexible seal strips are easily replaceable and readily available from stocks maintained by manufacturer.

F. Manufacturers:

1. National Guard Products (NG).
2. Pemko Products; ASSA ABLOY Architectural Door Accessories (PE).
3. Reese Enterprises, Inc. (RE).

2.15 ELECTRONIC ACCESSORIES

A. Request-to-Exit Motion Sensor: Request-to-Exit Sensors motion detectors specifically designed for detecting exiting through a door from the secure area to a non-secure area. Listed UL 294 and ULC-S319 as an access control device. Cannot be activated by placing objects under door, thermal changes, or by pets. Include built-in timers (up to 60 second adjustable timing), door monitor with sounder alert, internal vertical point ability coverage, 12VDC or 24VDC power and selectable relay trigger with fail safe/fail secure modes.

1. Manufacturers:

a. Alarm Controls (AK) – SREX-100

B. Door Position Switches: Door position magnetic reed contact switches specifically designed for use in commercial door applications. On recessed models the contact and magnetic housing snap-lock into a 1" diameter hole. Surface mounted models include wide gap distance design

complete with armored flex cabling. Provide SPDT, N/O switches with optional Rare Earth Magnet installation on steel doors with flush top channels.

1. Manufacturers:

    a. Securitron (SU) - DPS Series.
    b. Securitron (SU) – MMS Series.
    c. Sargent (SA) – 3287

C. Power Supplies: Provide Nationally Recognized Testing Laboratory Listed 12VDC or 24VDC (field selectable) filtered and regulated power supplies. Include battery backup option with integral battery charging capability in addition to operating the DC load in event of line voltage failure. Provide the least number of units, at the appropriate amperage level, sufficient to exceed the required total draw for the specified electrified hardware and access control equipment.

1. Manufacturers:

    a. Securitron (SU) - BPS Series.

D. Switching Power Supplies: Provide switching power supplies that are dual voltage, UL listed, supervised units. Units shall be field selectable with a dedicated battery charging circuit that provide 4 Amp at 12VDC or 24VDC continuous, with up to 16 independently controlled power limited outputs. Units shall tolerate brownout or overvoltage input ± 15% of nominal voltage and have thermal shutdown protection with auto restart. Circuit breaker shall protect against overcurrent and reverse battery faults and units shall be available with a single relay fire trigger or individually triggered relayed outputs. Provide the least number of units, at the appropriate amperage level, sufficient to exceed the required total draw for the specified electrified hardware and access control equipment.

1. Manufacturers:

    a. Securitron (SU) - AQ Series.

2.16 FABRICATION

A. Fasteners: Provide door hardware manufactured to comply with published templates generally prepared for machine, wood, and sheet metal screws. Provide screws according to manufacturers recognized installation standards for application intended.

2.17 FINISHES

A. Standard: Designations used in the Hardware Sets and elsewhere indicate hardware finishes complying with ANSI/BHMA A156.18, including coordination with traditional U.S. finishes indicated by certain manufacturers for their products.

B. Provide quality of finish, including thickness of plating or coating (if any), composition, hardness, and other qualities complying with manufacturer's standards, but in no case less than specified by referenced standards for the applicable units of hardware

C. Protect mechanical finishes on exposed surfaces from damage by applying a strippable, temporary protective covering before shipping.

D. Exposed Metal Finishes: 613E = Dark Oxidized Satin Bronze

Hinges-Exterior:	624
Hinges-Interior:	624/640
Locksets:	613E
Closers:	613E
Exit Devices:	613E
Pushes, Pulls, Kick Plates:	613E
Armor Plates:	613E
Door Edge Guards:	613E
Overhead Stops & Holders:	613E
Door Stops:	613E
Thresholds:	DkB - Dark Bronze Anodized
Door Gaskets:	DkB - Dark Bronze Anodized
Sweep Strips:	DkB - Dark Bronze Anodized
Rain Drips:	DkB - Dark Bronze Anodized
Miscellaneous Items:	613E

PART 3 - EXECUTION

3.1 EXAMINATION

A. Examine scheduled openings, with Installer present, for compliance with requirements for installation tolerances, labeled fire door assembly construction, wall and floor construction, and other conditions affecting performance.

B. Notify architect of any discrepancies or conflicts between the door schedule, door types, drawings and scheduled hardware. Proceed only after such discrepancies or conflicts have been resolved in writing.

3.2 PREPARATION

A. Hollow Metal Doors and Frames: Comply with ANSI/DHI A115 series.

B. Wood Doors: Comply with ANSI/DHI A115-W series.

3.3 INSTALLATION

A. Install each item of mechanical and electromechanical hardware and access control equipment to comply with manufacturer's written instructions and according to specifications.

1. Installers are to be trained and certified by the manufacturer on the proper installation and adjustment of fire, life safety, and security products including: hanging devices; locking devices; closing devices; and seals.

B. Mounting Heights: Mount door hardware units at heights indicated in following applicable publications, unless specifically indicated or required to comply with governing regulations:

1. Standard Steel Doors and Frames: DHI's "Recommended Locations for Architectural Hardware for Standard Steel Doors and Frames."
2. Wood Doors: DHI WDHS.3, "Recommended Locations for Architectural Hardware for Wood Flush Doors."
3. Where indicated to comply with accessibility requirements, comply with ANSI A117.1 "Accessibility Guidelines for Buildings and Facilities."
4. Provide blocking in drywall partitions where wall stops or other wall mounted hardware is located.

C. Retrofitting: Install door hardware to comply with manufacturer's published templates and written instructions. Where cutting and fitting are required to install door hardware onto or into surfaces that are later to be painted or finished in another way, coordinate removal, storage, and reinstallation of surface protective trim units with finishing work specified in Division 9 Sections. Do not install surface-mounted items until finishes have been completed on substrates involved.

D. Door Closers:
1. Install closers on room side of corridor doors, and stair side of stairways.
2. Exterior doors: Parallel rigid arm installation.
3. Install closers using only manufacturer-furnished through-bolts.
4. Use of self-drilling or self-tapping fasteners is not allowed.

E. Thresholds: Set thresholds for exterior and acoustical doors in full bed of sealant complying with requirements specified in Division 7 Section "Joint Sealants."

F. Storage: Provide a secure lock up for hardware delivered to the project but not yet installed. Control the handling and installation of hardware items so that the completion of the work will not be delayed by hardware losses before and after installation.

3.4 FIELD QUALITY CONTROL

A. Field Inspection: Supplier will perform a final inspection of installed door hardware and state in report whether work complies with or deviates from requirements, including whether door hardware is properly installed, operating and adjusted.

3.5 ADJUSTING

A. Initial Adjustment: Adjust and check each operating item of door hardware and each door to ensure proper operation or function of every unit. Replace units that cannot be adjusted to operate as intended. Adjust door control devices to compensate for final operation of heating and ventilating equipment and to comply with referenced accessibility requirements.

3.6 CLEANING AND PROTECTION

A. Protect all hardware stored on construction site in a covered and dry place. Protect exposed hardware installed on doors during the construction phase. Install any and all hardware at the latest possible time frame.

B. Clean adjacent surfaces soiled by door hardware installation.

C. Clean operating items as necessary to restore proper finish. Provide final protection and maintain conditions that ensure door hardware is without damage or deterioration at time of owner occupancy.

3.7 DEMONSTRATION

A. Instruct Owner's maintenance personnel to adjust, operate, and maintain mechanical and electromechanical door hardware.

3.8 DOOR HARDWARE SETS

A. The hardware sets represent the design intent and direction of the owner and architect. They are a guideline only and should not be considered a detailed hardware schedule. Discrepancies, conflicting hardware and missing items should be brought to the attention of the architect with corrections made prior to the bidding process. Omitted items not included in a hardware set should be scheduled with the appropriate additional hardware required for proper application and functionality.

B. The supplier is responsible for handing and sizing all products and providing the correct option for the appropriate door type and material where more than one is presented in the hardware sets. Quantities listed are for each pair of doors, or for each single door.

C. Manufacturer's Abbreviations:

1. MK - McKinney
2. MR - Markar
3. RO - Rockwood
4. ST - Stanley Works
5. ST - dormakaba Door Closers
6. ST - dormakaba Hinges
7. SU - Securitron
8. OT - OTHER
9. SA - Sargent
10. SC - Schlage
11. HS - HES
12. RF - Rixson
13. NO - Norton
14. PE - Pemko
15. AK - Alarm Controls

16. RU - Corbin Russwin
17. AR - Architectural Control Systems Inc
18. VI - ASSA ABLOY Hospitality
19. AD - Adams Rite

Hardware Sets

Set: 1.00
Card Reader (DPS) - Single: (Power Supply) Storeroom Lock x EL Strike x Door Closer w/ Spring Stop Closer

	Hinge	TA2314 (NRP)	MK
1	Storeroom Lock	LC 8204	SA
1	Cylinder	As Specified	SC
1	ElectroLynx Adaptor	2004M	HS
1	SMART Pac Bridge Rectifier	2005M3	HS
1	Electric Strike	1500C	HS
1	Door Closer	351 CPS	SA
1	Threshold	171A Pemkote (1/2" High)	PE
1	Gasketing	S88	PE
1	Sweep	345_PK	PE
1	ElectroLynx Harness	QC-C1500 (power supply to electric strike)	MK
1	Card Reader	WR01 / WR02 / WR03 / WR04 (as required)	SA
1	Position Switch	DPS	SU
1	Detector	SREX-100	AK
1	Power Distribution Board	PDB-8F8R	SU
1	Power Supply	AQS1210 (for powering card readers only)	SU
1	Power Supply	AQS1210 (for powering card readers only)	SU
2	Power Distribution Board	PDB-8C2	SU
1	Latch Protector	320-RKW	RO
1	Set Wiring Diagrams	by Security Vendor	00

Application:
-Access control vendor to integrate lock with access control system.
-Card reader type determined by application.
-Power supply for Card-readers is powered by 12VDC power supply.
-Electric strike and motion sensor is powered by 24VDC power supply.
-Share power supply with openings: 002, 002A 003, 004, 005, 006, 007A, 007B

Door normally closed, latched, and locked - free egress at all times.
Door monitored for door ajar or forced open - motion sensor above unsecure side (egress side) of door allows an individual to freely leave without sending an alarm to the access control system.
Entrance by mechanical key or presenting a valid card to card-reader.
Egress allowed at all times.
Loss of power maintains door security from locked side, entrance by mechanical key only - free egress at all times.

Set: 1.01

Card Reader (DPS) - Single: Storeroom Lock x EL Strike x Door Closer w/ Spring Stop Closer

	Hinge	TA2314 (NRP)	MK
1	Storeroom Lock	LC 8204	SA
1	Cylinder	As Specified	SC
1	ElectroLynx Adaptor	2004M	HS
1	SMART Pac Bridge Rectifier	2005M3	HS
1	Electric Strike	1500C	HS
1	Door Closer	351 CPS	SA
1	Threshold	171A Pemkote (1/2" High)	PE
1	Gasketing	S88	PE
1	Sweep	345_PK	PE
1	ElectroLynx Harness	QC-C1500 (power supply to electric strike)	MK
1	Card Reader	WR01 / WR02 / WR03 / WR04 (as required)	SA
1	Position Switch	DPS	SU
1	Detector	SREX-100	AK
1	Set Wiring Diagrams	by Security Vendor	00

Application:
-Access control vendor to integrate lock with access control system.
-Card reader type determined by application.
-Power supply for Card-readers is powered by 12VDC power supply.
-Electric strike and motion sensor is powered by 24VDC power supply.
-Share power supply from opening: "001" Hardware Set (1.00)

Door normally closed, latched, and locked - free egress at all times.
Door monitored for door ajar or forced open - motion sensor above unsecure side (egress side) of door allows an individual to freely leave without sending an alarm to the access control system.
Entrance by mechanical key or presenting a valid card to card-reader.
Egress allowed at all times.
Loss of power maintains door security from locked side, entrance by mechanical key only - free egress at all times.

Set: 1.02
Card Reader (DPS) - Single: Storeroom Lock x EL Strike x Door Closer

	Hinge	TA2314 (NRP)	MK
1	Storeroom Lock	LC 8204	SA
1	Cylinder	As Specified	SC
1	ElectroLynx Adaptor	2004M	HS
1	SMART Pac Bridge Rectifier	2005M3	HS
1	Electric Strike	1500C	HS
1	Door Closer	351 O / P10	SA
1	Stop	as required	RO
1	Gasketing	S88	PE
1	ElectroLynx Harness	QC-C1500 (power supply to electric strike)	MK
1	Card Reader	WR01 / WR02 / WR03 / WR04 (as required)	SA
1	Position Switch	DPS	SU
1	Detector	SREX-100	AK

1	Set Wiring Diagrams	by Security Vendor	00

Application:
-Access control vendor to integrate lock with access control system.
-Card reader type determined by application.
-Power supply for Card-readers is powered by 12VDC power supply.
-Electric strike and motion sensor is powered by 24VDC power supply.
-Share power supply from opening: "001" Hardware Set (1.00)

Door normally closed, latched, and locked - free egress at all times.
Door monitored for door ajar or forced open - motion sensor above unsecure side (egress side) of door allows an individual to freely leave without sending an alarm to the access control system.
Entrance by mechanical key or presenting a valid card to card-reader.
Egress allowed at all times.
Loss of power maintains door security from locked side, entrance by mechanical key only - free egress at all times.

Set: 1.03
Card Reader (DPS) - Pair: Storeroom Lock x EL Strike x Door Closer w/ Spring Stop Closer

1	Continuous Hinge	HG305 AS x Height Required	MR
1	Continuous Hinge	HG305 CTP AS x Height Required	MR
1	Flush Bolt	2842 / 2942	RO
1	Dust Proof Strike	570	RO
1	Storeroom Lock	LC 8204	SA
1	Cylinder	As Specified	SC
1	ElectroLynx Adaptor	2004M	HS
1	SMART Pac Bridge Rectifier	2005M3	HS
1	Electric Strike	1500C	HS
1	Coordinator	2600	RO
2	Mounting Bracket	2601 (used with coordinator)	RO
2	Door Closer	351 CPS	SA
1	Threshold	171A Pemkote (1/2" High)	PE
1	Gasketing	S88	PE
2	Sweep	345_PK	PE
1	Astragal	(door manufacturer's heavy duty standard)	00
1	Electric Power Transfer	EL-CEPT	SU
1	ElectroLynx Harness	QC-C1500 (transfer to power supply or J-box)	MK
1	ElectroLynx Harness	QC-Cxxx (transfer to electrical on door)	MK
1	Card Reader	WR01 / WR02 / WR03 / WR04 (as required)	SA
2	Position Switch	DPS	SU
1	Detector	SREX-100	AK
1	Set Wiring Diagrams	by Security Vendor	00

Application:
-Access control vendor to integrate lock with access control system.
-Card reader type determined by application.
-Power supply for Card-readers is powered by 12VDC power supply.
-Electric strike and motion sensor is powered by 24VDC power supply.

-Share power supply from opening: "001" Hardware Set (1.00)

Door normally closed, latched, and locked - free egress at all times.
Door monitored for door ajar or forced open - motion sensor above unsecure side (egress side) of door allows an individual to freely leave without sending an alarm to the access control system.
Entrance by mechanical key or presenting a valid card to card-reader.
Egress allowed at all times.
Loss of power maintains door security from locked side, entrance by mechanical key only - free egress at all times.

Set: 1.04
Card Reader (DPS) - Single: Storeroom Lock x EL Strike x Surface Overhead Stop x Door Closer

	Hinge	TA2314 (NRP)	MK
1	Storeroom Lock	LC 8204	SA
1	Cylinder	As Specified	SC
1	ElectroLynx Adaptor	2004M	HS
1	SMART Pac Bridge Rectifier	2005M3	HS
1	Electric Strike	1500C	HS
1	Surf Overhead Stop	9-X36	RF
1	Door Closer	351 O	SA
1	Kick Plate	K1050 12" x CSK x BEV 4 Edges	RO
1	Threshold	252x3AFG Pemkote (1/2" High)	PE
1	Threshold	171A Pemkote (1/2" High)	PE
1	Gasketing	S88	PE
1	Rain Guard	346	PE
1	Sweep	345_PK	PE
1	ElectroLynx Harness	QC-C1500 (power supply to electric strike)	MK
1	Card Reader	WR01 / WR02 / WR03 / WR04 (as required)	SA
1	Position Switch	DPS	SU
1	Detector	SREX-100	AK
1	Set Wiring Diagrams	by Security Vendor	00

Application:
-Access control vendor to integrate lock with access control system.
-Card reader type determined by application.
-Power supply for Card-readers is powered by 12VDC power supply.
-Electric strike and motion sensor is powered by 24VDC power supply.
-Share power supply from opening: "001" Hardware Set (1.00)

Door normally closed, latched, and locked - free egress at all times.
Door monitored for door ajar or forced open - motion sensor above unsecure side (egress side) of door allows an individual to freely leave without sending an alarm to the access control system.
Entrance by mechanical key or presenting a valid card to card-reader.
Egress allowed at all times.
Loss of power maintains door security from locked side, entrance by mechanical key only - free egress at all times.

Set: 2.00

Card Reader (DPS) - Single: Cont Hinge x (Power Supply) Storeroom Lock x EL Strike x Door Closer w/ Spring Stop Closer

1	Continuous Hinge	MCK-12HD x Height Required	MK
1	Storeroom Lock	LC 8204	SA
1	Cylinder	As Specified	SC
1	ElectroLynx Adaptor	2004M	HS
1	SMART Pac Bridge Rectifier	2005M3	HS
1	Electric Strike	1500C	HS
1	Conc Overhead Stop	1-X36	RF
1	Door Closer	351 P10	SA
1	Drop Plate	351D	SA
1	Bracket	125V	SA
1	Kit	581-2	SA
1	Spacer	63-0191	SA
1	Threshold	171A Pemkote (1/2" High)	PE
1	Gasketing	S88	PE
1	Sweep	345_PK	PE
1	ElectroLynx Harness	QC-C1500 (power supply to electric strike)	MK
1	Card Reader	WR01 / WR02 / WR03 / WR04 (as required)	SA
1	Position Switch	DPS	SU
1	Detector	SREX-100	AK
1	Power Distribution Board	PDB-8F8R	SU
1	Power Supply	AQS1210 (for powering card readers only)	SU
2	Power Distribution Board	PDB-8C2	SU
1	Power Supply	AQS2410 (for powering electric strikes and motion sensors)	SU
1	Set Wiring Diagrams	by Security Vendor	00

Application:
-Access control vendor to integrate lock with access control system.c
-Card reader type determined by application.
-Power supply for Card-readers is powered by 12VDC power supply.
-Electric strike and motion sensor is powered by 24VDC power supply.
-Share power supply with openings: 010B, 011A, 011B, 012, 012A, 013, 014A, 017A, 017B, 018, 018A, 019, 021A, 022

Door normally closed, latched, and locked - free egress at all times.
Door monitored for door ajar or forced open - motion sensor above unsecure side (egress side) of door allows an individual to freely leave without sending an alarm to the access control system.
Entrance by mechanical key or presenting a valid card to card-reader.
Egress allowed at all times.
Loss of power maintains door security from locked side, entrance by mechanical key only - free egress at all times.

Set: 2.01
Card Reader (DPS) - Single: Cont Hinge x Storeroom Lock x EL Strike x Door Closer w/ Spring Stop Closer

1	Continuous Hinge	MCK-12HD x Height Required	MK

1	Storeroom Lock	LC 8204	SA
1	Cylinder	As Specified	SC
1	ElectroLynx Adaptor	2004M	HS
1	SMART Pac Bridge Rectifier	2005M3	HS
1	Electric Strike	1500C	HS
1	Conc Overhead Stop	1-X36	RF
1	Door Closer	351 P10	SA
1	Drop Plate	351D	SA
1	Bracket	125V	SA
1	Kit	581-2	SA
1	Spacer	63-0191	SA
1	Threshold	171A Pemkote (1/2" High)	PE
1	Gasketing	S88	PE
1	Sweep	345_PK	PE
1	ElectroLynx Harness	QC-C1500 (power supply to electric strike)	MK
1	Card Reader	WR01 / WR02 / WR03 / WR04 (as required)	SA
1	Position Switch	DPS	SU
1	Detector	SREX-100	AK
1	Set Wiring Diagrams	by Security Vendor	00

Application:
-Access control vendor to integrate lock with access control system.
-Card reader type determined by application.
-Power supply for Card-readers is powered by 12VDC power supply.
-Electric strike and motion sensor is powered by 24VDC power supply.
-Share power supply from opening: "010A" Hardware Set (2.00)

Door normally closed, latched, and locked - free egress at all times.
Door monitored for door ajar or forced open - motion sensor above unsecure side (egress side) of door allows an individual to freely leave without sending an alarm to the access control system.
Entrance by mechanical key or presenting a valid card to card-reader.
Egress allowed at all times.
Loss of power maintains door security from locked side, entrance by mechanical key only - free egress at all times.

Set: 2.02
Card Reader (DPS) - Single: Storeroom Lock x EL Strike x Surface Overhead Stop x Door Closer

	Hinge	TA2314 (NRP)	MK
1	Storeroom Lock	LC 8204	SA
1	Cylinder	As Specified	SC
1	ElectroLynx Adaptor	2004M	HS
1	SMART Pac Bridge Rectifier	2005M3	HS
1	Electric Strike	1500C	HS
1	Surf Overhead Stop	9-X36	RF
1	Door Closer	351 O	SA
1	Gasketing	S88	PE
1	ElectroLynx Harness	QC-C1500 (power supply to electric strike)	MK
1	Card Reader	WR01 / WR02 / WR03 / WR04 (as required)	SA

1	Position Switch	DPS	SU
1	Detector	SREX-100	AK
1	Set Wiring Diagrams	by Security Vendor	00

Application:
-Access control vendor to integrate lock with access control system.
-Card reader type determined by application.
-Power supply for Card-readers is powered by 12VDC power supply.
-Electric strike and motion sensor is powered by 24VDC power supply.
-Share power supply from opening: "010A" Hardware Set (2.00)

Door normally closed, latched, and locked - free egress at all times.
Door monitored for door ajar or forced open - motion sensor above unsecure side (egress side) of door allows an individual to freely leave without sending an alarm to the access control system.
Entrance by mechanical key or presenting a valid card to card-reader.
Egress allowed at all times.
Loss of power maintains door security from locked side, entrance by mechanical key only - free egress at all times.

Set: 2.03
Restroom - Single: Dormitory (deadbolt, indicator) x Door Closer

	Hinge	TA2314 (NRP)	MK
1	Dormitory Lock	LB LC 49 8225	SA
1	Cylinder	As Specified	SC
1	Door Closer	351 O / P10	SA
1	Stop	as required	RO
1	Gasketing	S88	PE

Door normally open with either handle retracting latch for entrance or egress.
Deadbolt operated by key outside and lever-turn inside.
When deadbolt is projected, outside lever is automatically locked.
Operating inside lever retracts the latchbolt and deadbolt simultaneously, automatically unlocking outside lever.
Free egress at all times.

Set: 2.04
Card Reader (DPS) - Pair: Storeroom Lock x EL Strike x Door Closer w/ Spring Stop Closer

	Hinge	TA2314 (NRP)	MK
1	Flush Bolt	2842 / 2942	RO
1	Dust Proof Strike	570	RO
1	Storeroom Lock	LC 8204	SA
1	Cylinder	As Specified	SC
1	ElectroLynx Adaptor	2004M	HS
1	SMART Pac Bridge Rectifier	2005M3	HS
1	Electric Strike	1500C	HS
1	Coordinator	2600	RO
2	Mounting Bracket	2601 (used with coordinator)	RO

2	Door Closer	351 CPS	SA
1	Gasketing	S88	PE
2	Sweep	345_PK	PE
1	Astragal	S771	PE
1	Astragal	(door manufacturer's heavy duty standard)	00
1	Electric Power Transfer	EL-CEPT	SU
1	ElectroLynx Harness	QC-C1500 (transfer to power supply or J-box)	MK
1	ElectroLynx Harness	QC-Cxxx (transfer to electrical on door)	MK
1	Card Reader	WR01 / WR02 / WR03 / WR04 (as required)	SA
2	Position Switch	DPS	SU
1	Detector	SREX-100	AK
1	Set Wiring Diagrams	by Security Vendor	00

Application:
-Access control vendor to integrate lock with access control system.
-Card reader type determined by application.
-Power supply for Card-readers is powered by 12VDC power supply.
-Electric strike and motion sensor is powered by 24VDC power supply.
-Share power supply from opening: "010A" Hardware Set (2.00)

Door normally closed, latched, and locked - free egress at all times.
Door monitored for door ajar or forced open - motion sensor above unsecure side (egress side) of door allows an individual to freely leave without sending an alarm to the access control system.
Entrance by mechanical key or presenting a valid card to card-reader.
Egress allowed at all times.
Loss of power maintains door security from locked side, entrance by mechanical key only - free egress at all times.

Set: 2.05
Card Reader (DPS) - Pair: Storeroom Lock x EL Strike x Door Closer w/ Spring Stop Closer

1	Continuous Hinge	HG305 AS x Height Required	MR
1	Continuous Hinge	HG305 CTP AS x Height Required	MR
1	Flush Bolt	2842 / 2942	RO
1	Dust Proof Strike	570	RO
1	Storeroom Lock	LC 8204	SA
1	Cylinder	As Specified	SC
1	ElectroLynx Adaptor	2004M	HS
1	SMART Pac Bridge Rectifier	2005M3	HS
1	Electric Strike	1500C	HS
1	Coordinator	2600	RO
2	Mounting Bracket	2601 (used with coordinator)	RO
2	Door Closer	351 CPS	SA
1	Threshold	171A Pemkote (1/2" High)	PE
1	Gasketing	S88	PE
2	Sweep	345_PK	PE
1	Astragal	(door manufacturer's heavy duty standard)	00
1	Electric Power Transfer	EL-CEPT	SU
1	ElectroLynx Harness	QC-C1500 (transfer to power supply or J-box)	MK

1	ElectroLynx Harness	QC-Cxxx (transfer to electrical on door)	MK
1	Card Reader	WR01 / WR02 / WR03 / WR04 (as required)	SA
2	Position Switch	DPS	SU
1	Detector	SREX-100	AK
1	Set Wiring Diagrams	by Security Vendor	00

Application:
-Access control vendor to integrate lock with access control system.
-Card reader type determined by application.
-Power supply for Card-readers is powered by 12VDC power supply.
-Electric strike and motion sensor is powered by 24VDC power supply.
-Share power supply from opening: "010A" Hardware Set (2.00)

Door normally closed, latched, and locked - free egress at all times.
Door monitored for door ajar or forced open - motion sensor above unsecure side (egress side) of door allows an individual to freely leave without sending an alarm to the access control system.
Entrance by mechanical key or presenting a valid card to card-reader.
Egress allowed at all times.
Loss of power maintains door security from locked side, entrance by mechanical key only - free egress at all times.

Set: 2.06
Card Reader (DPS) - Single: Cont Hinge x Storeroom Lock x EL Strike x Door Closer

1	Continuous Hinge	MCK-12HD x Height Required	MK
1	Storeroom Lock	LC 8204	SA
1	Cylinder	As Specified	SC
1	ElectroLynx Adaptor	2004M	HS
1	SMART Pac Bridge Rectifier	2005M3	HS
1	Electric Strike	1500C	HS
1	Door Closer	351 P10	SA
1	Drop Plate	351D	SA
1	Bracket	125V	SA
1	Kit	581-2	SA
1	Spacer	63-0191	SA
1	Stop	as required	RO
1	Gasketing	S88	PE
1	ElectroLynx Harness	QC-C1500 (power supply to electric strike)	MK
1	Card Reader	WR01 / WR02 / WR03 / WR04 (as required)	SA
1	Position Switch	DPS	SU
1	Detector	SREX-100	AK
1	Set Wiring Diagrams	by Security Vendor	00

Application:
-Access control vendor to integrate lock with access control system.
-Card reader type determined by application.
-Power supply for Card-readers is powered by 12VDC power supply.
-Electric strike and motion sensor is powered by 24VDC power supply.
-Share power supply from opening: "010A" Hardware Set (2.00)

Door normally closed, latched, and locked - free egress at all times.
Door monitored for door ajar or forced open - motion sensor above unsecure side (egress side) of door allows an individual to freely leave without sending an alarm to the access control system.
Entrance by mechanical key or presenting a valid card to card-reader.
Egress allowed at all times.
Loss of power maintains door security from locked side, entrance by mechanical key only - free egress at all times.

Set: 2.07
Card Reader (DPS) - Single: Storeroom Lock x EL Strike x Door Closer

	Hinge	TA2314 (NRP)	MK
1	Storeroom Lock	LC 8204	SA
1	Cylinder	As Specified	SC
1	ElectroLynx Adaptor	2004M	HS
1	SMART Pac Bridge Rectifier	2005M3	HS
1	Electric Strike	1500C	HS
1	Door Closer	351 O / P10	SA
1	Stop	as required	RO
1	Gasketing	S88	PE
1	ElectroLynx Harness	QC-C1500 (power supply to electric strike)	MK
1	Card Reader	WR01 / WR02 / WR03 / WR04 (as required)	SA
1	Position Switch	DPS	SU
1	Detector	SREX-100	AK
1	Set Wiring Diagrams	by Security Vendor	00

Application:
-Access control vendor to integrate lock with access control system.
-Card reader type determined by application.
-Power supply for Card-readers is powered by 12VDC power supply.
-Electric strike and motion sensor is powered by 24VDC power supply.
-Share power supply from opening: "010A" Hardware Set (2.00)

Door normally closed, latched, and locked - free egress at all times.
Door monitored for door ajar or forced open - motion sensor above unsecure side (egress side) of door allows an individual to freely leave without sending an alarm to the access control system.
Entrance by mechanical key or presenting a valid card to card-reader.
Egress allowed at all times.
Loss of power maintains door security from locked side, entrance by mechanical key only - free egress at all times.

Set: 2.08
Restroom - Single: Dormitory (deadbolt, indicator) x Door Closer

	Hinge	TA2314 (NRP)	MK
1	Dormitory Lock	LB LC 49 8225	SA
1	Cylinder	As Specified	SC
1	Door Closer	351 O / P10	SA

1	Stop	as required	RO
1	Gasketing	S88	PE

Door normally open with either handle retracting latch for entrance or egress.
Deadbolt operated by key outside and lever-turn inside.
When deadbolt is projected, outside lever is automatically locked.
Operating inside lever retracts the latchbolt and deadbolt simultaneously, automatically unlocking outside lever.
Free egress at all times.

Set: 3.00
Card Reader (DPS) - Pair: (Power Supply) Mortise Exit Device (storeroom) x EL Strike x Door Closer w/ Spring Stop Closer

	Hinge	TA2314 (NRP)	MK
1	Flush Bolt	2842 / 2942	RO
1	Dust Proof Strike	570	RO
1	Mortise Exit Device	(12) LC LD 43 8906 ET	SA
1	Cylinder	As Specified	SC
1	ElectroLynx Adaptor	2004M	HS
1	SMART Pac Bridge Rectifier	2005M3	HS
1	Electric Strike	1500C	HS
1	Coordinator	2600	RO
2	Mounting Bracket	2601 (used with coordinator)	RO
2	Door Closer	351 CPS	SA
1	Threshold	171A Pemkote (1/2" High)	PE
1	Gasketing	S88	PE
2	Sweep	345_PK	PE
1	Astragal	S771	PE
1	Astragal	(door manufacturer's heavy duty standard)	00
1	Electric Power Transfer	EL-CEPT	SU
1	ElectroLynx Harness	QC-C1500 (transfer to power supply or J-box)	MK
1	ElectroLynx Harness	QC-Cxxx (transfer to electrical on door)	MK
1	Card Reader	WR01 / WR02 / WR03 / WR04 (as required)	SA
2	Position Switch	DPS	SU
1	Detector	SREX-100	AK
1	Power Distribution Board	PDB-8F8R	SU
1	Power Supply	AQS1210 (for powering card readers only)	SU
2	Power Distribution Board	PDB-8C2	SU
1	Power Supply	AQS2410 (for powering electric strikes and motion sensors)	SU
1	Set Wiring Diagrams	by Security Vendor	00

Application:
-Access control vendor to integrate lock with access control system.
-Card reader type determined by application.
-Power supply for Card-readers is powered by 12VDC power supply.
-Electric strike and motion sensor is powered by 24VDC power supply.
-Share power supply with openings: 101A, 101B, 102A, 103, 104, 105, 106, 119S

Door normally closed, latched, and locked - free egress at all times.
Door monitored for door ajar or forced open - motion sensor above unsecure side (egress side) of door allows an individual to freely leave without sending an alarm to the access control system.
Entrance by mechanical key or presenting a valid card to card-reader.
Egress allowed at all times.
Loss of power maintains door security from locked side, entrance by mechanical key only - free egress at all times.

Set: 3.01
Card Reader (DPS) - Pair: Cont Hinge x Storeroom Lock x EL Strike x Door Closer w/ Spring Stop Closer

1	Continuous Hinge	HG305 AS x Height Required	MR
1	Continuous Hinge	HG305 CTP AS x Height Required	MR
1	Flush Bolt	2842 / 2942	RO
1	Dust Proof Strike	570	RO
1	Storeroom Lock	LC 8204	SA
1	Cylinder	As Specified	SC
1	ElectroLynx Adaptor	2004M	HS
1	SMART Pac Bridge Rectifier	2005M3	HS
1	Electric Strike	1500C	HS
1	Coordinator	2600	RO
2	Mounting Bracket	2601 (used with coordinator)	RO
2	Door Closer	351 CPS	SA
1	Gasketing	S88	PE
2	Sweep	345_PK	PE
1	Astragal	(door manufacturer's heavy duty standard)	00
1	Electric Power Transfer	EL-CEPT	SU
1	ElectroLynx Harness	QC-C1500 (transfer to power supply or J-box)	MK
1	ElectroLynx Harness	QC-Cxxx (transfer to electrical on door)	MK
1	Card Reader	WR01 / WR02 / WR03 / WR04 (as required)	SA
2	Position Switch	DPS	SU
1	Detector	SREX-100	AK
1	Set Wiring Diagrams	by Security Vendor	00

Application:
-Access control vendor to integrate lock with access control system.
-Card reader type determined by application.
-Power supply for Card-readers is powered by 12VDC power supply.
-Electric strike and motion sensor is powered by 24VDC power supply.
-Share power supply from opening: "100" Hardware Set (3.00)

Door normally closed, latched, and locked - free egress at all times.
Door monitored for door ajar or forced open - motion sensor above unsecure side (egress side) of door allows an individual to freely leave without sending an alarm to the access control system.
Entrance by mechanical key or presenting a valid card to card-reader.
Egress allowed at all times.

Loss of power maintains door security from locked side, entrance by mechanical key only - free egress at all times.

Set: 3.02
Card Reader (DPS) - Single: Storeroom Lock x EL Strike x Door Closer

	Hinge	TA2314 (NRP)	MK
1	Storeroom Lock	LC 8204	SA
1	Cylinder	As Specified	SC
1	ElectroLynx Adaptor	2004M	HS
1	SMART Pac Bridge Rectifier	2005M3	HS
1	Electric Strike	1500C	HS
1	Door Closer	351 O / P10	SA
1	Stop	as required	RO
1	Gasketing	S88	PE
1	Sweep	345_PK	PE
1	ElectroLynx Harness	QC-C1500 (power supply to electric strike)	MK
1	Card Reader	WR01 / WR02 / WR03 / WR04 (as required)	SA
1	Position Switch	DPS	SU
1	Detector	SREX-100	AK
1	Set Wiring Diagrams	by Security Vendor	00

Application:
-Access control vendor to integrate lock with access control system.
-Card reader type determined by application.
-Power supply for Card-readers is powered by 12VDC power supply.
-Electric strike and motion sensor is powered by 24VDC power supply.
-Share power supply from opening: "100" Hardware Set (3.00)

Door normally closed, latched, and locked - free egress at all times.
Door monitored for door ajar or forced open - motion sensor above unsecure side (egress side) of door allows an individual to freely leave without sending an alarm to the access control system.
Entrance by mechanical key or presenting a valid card to card-reader.
Egress allowed at all times.
Loss of power maintains door security from locked side, entrance by mechanical key only - free egress at all times.

Set: 3.03
Card Reader (DPS) - Single: Storeroom Lock x EL Strike x Door Closer w/ Spring Stop Closer

	Hinge	TA2314 (NRP)	MK
1	Storeroom Lock	LC 8204	SA
1	Cylinder	As Specified	SC
1	ElectroLynx Adaptor	2004M	HS
1	SMART Pac Bridge Rectifier	2005M3	HS
1	Electric Strike	1500C	HS
1	Door Closer	351 CPS	SA
1	Threshold	171A Pemkote (1/2" High)	PE
1	Gasketing	S88	PE

1	Sweep	345_PK	PE
1	ElectroLynx Harness	QC-C1500 (power supply to electric strike)	MK
1	Card Reader	WR01 / WR02 / WR03 / WR04 (as required)	SA
1	Position Switch	DPS	SU
1	Detector	SREX-100	AK
1	Set Wiring Diagrams	by Security Vendor	00

Application:
-Access control vendor to integrate lock with access control system.
-Card reader type determined by application.
-Power supply for Card-readers is powered by 12VDC power supply.
-Electric strike and motion sensor is powered by 24VDC power supply.
-Share power supply from opening: "100" Hardware Set (3.00)

Door normally closed, latched, and locked - free egress at all times.
Door monitored for door ajar or forced open - motion sensor above unsecure side (egress side) of door allows an individual to freely leave without sending an alarm to the access control system.
Entrance by mechanical key or presenting a valid card to card-reader.
Egress allowed at all times.
Loss of power maintains door security from locked side, entrance by mechanical key only - free egress at all times.

Set: 3.04
Card Reader (Restroom) - Single: Storeroom Deadbolt x EL Strike x Door Closer

	Hinge	TA2314 (NRP)	MK
1	Storeroom Deadbolt Lock	LC LB 49 8251	SA
1	Cylinder	As Specified	SC
1	ElectroLynx Adaptor	2004M	HS
1	SMART Pac Bridge Rectifier	2005M3	HS
1	Electric Strike	1600-CDB-DLM	HS
1	Door Closer	351 O / P10	SA
1	Stop	as required	RO
1	Threshold	171A Pemkote (1/2" High)	PE
1	Gasketing	S88	PE
1	Sweep	345_PK	PE
1	ElectroLynx Harness	QC-C1500 (power supply to electric strike)	MK
1	Card Reader	WR01 / WR02 / WR03 / WR04 (as required)	SA
1	Set Wiring Diagrams	by Security Vendor	00

Application:
-Access control vendor to integrate lock with access control system.
-Card reader type determined by application.
-Power supply for Card-readers is powered by 12VDC power supply.
-Electric strike is powered by 24VDC power supply.
-Share power supply from opening: "100" Hardware Set (3.00)

Door normally closed, latched, and secure - free egress at all times.
Entrance by presenting a valid card to card-reader or mechanical key.

Deadbolt is projected by inside lever-turn, which changes indicator status from vacant to occupied.
Projected deadbolt denies entrance by a valid card to card-reader, entrance by mechanical key only.
Electrical Note: use electric strike's deadbolt monitor switch to deactivate card-reader.
Emergency entrance is allowed by mechanical key.
Turning inside lever handle will simultaneously retract deadbolt and latch, changes indicator status from occupied to vacant, and allows card-reader use for entrance.
Loss of power maintains door security from locked side, entrance by mechanical key only - free egress at all times.

Set: 3.05
Card Reader (DPS) - Pair: Cont Hinge x Storeroom Lock x EL Strike x Door Closer w/ Spring Stop Closer

1	Continuous Hinge	HG305 AS x Height Required	MR
1	Continuous Hinge	HG305 CTP AS x Height Required	MR
1	Flush Bolt	2842 / 2942	RO
1	Dust Proof Strike	570	RO
1	Storeroom Lock	LC 8204	SA
1	Cylinder	As Specified	SC
1	ElectroLynx Adaptor	2004M	HS
1	SMART Pac Bridge Rectifier	2005M3	HS
1	Electric Strike	1500C	HS
1	Coordinator	2600	RO
1	Mounting Bracket	2601 (used with coordinator)	RO
2	Door Closer	351 CPS	SA
1	Threshold	171A Pemkote (1/2" High)	PE
1	Gasketing	S88	PE
2	Sweep	345_PK	PE
1	Astragal	(door manufacturer's heavy duty standard)	00
1	Electric Power Transfer	EL-CEPT	SU
1	ElectroLynx Harness	QC-C1500 (transfer to power supply or J-box)	MK
1	ElectroLynx Harness	QC-Cxxx (transfer to electrical on door)	MK
1	Card Reader	WR01 / WR02 / WR03 / WR04 (as required)	SA
1	Position Switch	DPS	SU
1	Detector	SREX-100	AK
1	Set Wiring Diagrams	by Security Vendor	00

Application:
-Access control vendor to integrate lock with access control system.
-Card reader type determined by application.
-Power supply for Card-readers is powered by 12VDC power supply.
-Electric strike and motion sensor is powered by 24VDC power supply.
-Share power supply from opening: "100" Hardware Set (3.00)

Door normally closed, latched, and locked - free egress at all times.
Door monitored for door ajar or forced open - motion sensor above unsecure side (egress side) of door allows an individual to freely leave without sending an alarm to the access control system.
Entrance by mechanical key or presenting a valid card to card-reader.
Egress allowed at all times.

Loss of power maintains door security from locked side, entrance by mechanical key only - free egress at all times.

Set: 3.06
Card Reader (DPS) - Single: Storeroom Lock x EL Strike x Door Closer w/ Spring Stop Closer

	Hinge	TA2314 (NRP)	MK
1	Storeroom Lock	LC 8204	SA
1	Cylinder	As Specified	SC
1	ElectroLynx Adaptor	2004M	HS
1	SMART Pac Bridge Rectifier	2005M3	HS
1	Electric Strike	1500C	HS
1	Door Closer	351 CPS	SA
1	Gasketing	S88	PE
1	Sweep	345_PK	PE
1	ElectroLynx Harness	QC-C1500 (power supply to electric strike)	MK
1	Card Reader	WR01 / WR02 / WR03 / WR04 (as required)	SA
1	Position Switch	DPS	SU
1	Detector	SREX-100	AK
1	Set Wiring Diagrams	by Security Vendor	00

Application:
-Access control vendor to integrate lock with access control system.
-Card reader type determined by application.
-Power supply for Card-readers is powered by 12VDC power supply.
-Electric strike and motion sensor is powered by 24VDC power supply.
-Share power supply from opening: "100" Hardware Set (3.00)

Door normally closed, latched, and locked - free egress at all times.
Door monitored for door ajar or forced open - motion sensor above unsecure side (egress side) of door allows an individual to freely leave without sending an alarm to the access control system.
Entrance by mechanical key or presenting a valid card to card-reader.
Egress allowed at all times.
Loss of power maintains door security from locked side, entrance by mechanical key only - free egress at all times.

Set: 3.07
Card Reader (DPS) - Single: Storeroom Lock x EL Strike x Door Closer

	Hinge	TA2314 (NRP)	MK
1	Storeroom Lock	LC 8204	SA
1	Cylinder	As Specified	SC
1	ElectroLynx Adaptor	2004M	HS
1	SMART Pac Bridge Rectifier	2005M3	HS
1	Electric Strike	1500C	HS
1	Door Closer	351 O / P10	SA
1	Stop	as required	RO
1	Threshold	171A Pemkote (1/2" High)	PE
1	Gasketing	S88	PE

1	Sweep	345_PK	PE
1	ElectroLynx Harness	QC-C1500 (power supply to electric strike)	MK
1	Card Reader	WR01 / WR02 / WR03 / WR04 (as required)	SA
1	Position Switch	DPS	SU
1	Detector	SREX-100	AK
1	Set Wiring Diagrams	by Security Vendor	00

Application:
-Access control vendor to integrate lock with access control system.
-Card reader type determined by application.
-Power supply for Card-readers is powered by 12VDC power supply.
-Electric strike and motion sensor is powered by 24VDC power supply.
-Share power supply from opening: "100" Hardware Set (3.00)

Door normally closed, latched, and locked - free egress at all times.
Door monitored for door ajar or forced open - motion sensor above unsecure side (egress side) of door allows an individual to freely leave without sending an alarm to the access control system.
Entrance by mechanical key or presenting a valid card to card-reader.
Egress allowed at all times.
Loss of power maintains door security from locked side, entrance by mechanical key only - free egress at all times.

Set: 4.00
Card Reader (DPS) - Single: (Power Supply) Storeroom Lock x EL Strike x Door Closer w/ Spring Stop Closer

	Hinge	TA2314 (NRP)	MK
1	Storeroom Lock	LC 8204	SA
1	Cylinder	As Specified	SC
1	ElectroLynx Adaptor	2004M	HS
1	SMART Pac Bridge Rectifier	2005M3	HS
1	Electric Strike	1500C	HS
1	Door Closer	351 O	SA
1	Kick Plate	K1050 12" x CSK x BEV 4 Edges	RO
1	Stop	as required	RO
1	Gasketing	S88	PE
1	ElectroLynx Harness	QC-C1500 (power supply to electric strike)	MK
1	Card Reader	WR01 / WR02 / WR03 / WR04 (as required)	SA
1	Position Switch	DPS	SU
1	Detector	SREX-100	AK
1	Power Distribution Board	PDB-8F8R	SU
1	Power Supply	AQS1210 (for powering card readers only)	SU
2	Power Distribution Board	PDB-8C2	SU
1	Power Supply	AQS2410 (for powering electric strikes and motion sensors)	SU
1	Set Wiring Diagrams	by Security Vendor	00

Application:
-Access control vendor to integrate lock with access control system.

-Card reader type determined by application.
-Power supply for Card-readers is powered by 12VDC power supply.
-Electric strike and motion sensor is powered by 24VDC power supply.
-Share power supply with openings: 110, 110B, 113, 114, 117, 118, 119, 120, 123, 130

Door normally closed, latched, and locked - free egress at all times.
Door monitored for door ajar or forced open - motion sensor above unsecure side (egress side) of door allows an individual to freely leave without sending an alarm to the access control system.
Entrance by mechanical key or presenting a valid card to card-reader.
Egress allowed at all times.
Loss of power maintains door security from locked side, entrance by mechanical key only - free egress at all times.

Set: 4.01
Card Reader (DPS) - Pair: (Power Supply) Cont Hinge x CVR Exit Device (EL retraction) x Automatic Operator

2	Continuous Hinge	MCK-12HD EPT x Height Required	MK
1	Exit Device (exit only)	43 55 56 AD8610	SA
1	Exit Device (nightlatch)	LC 43 55 56 AD8610 106	SA
1	Cylinder	As Specified	SC
2	Pull	RM202 Mtg-Type 12XHD	RO
2	Conc Overhead Stop	1-X36	RF
1	Door Closer	351 P10	SA
1	Drop Plate	351D	SA
1	Bracket	125V	SA
1	Kit	581-2	SA
1	Spacer	63-0191	SA
1	Door Operator	by Section 08-7115	NO
1	Threshold	252x3AFG Pemkote (1/2" High)	PE
1	Threshold	171A Pemkote (1/2" High)	PE
1	Rain Guard	346	PE
1	Set Weatherstrip	(door manufacturer's heavy duty standard)	00
2	Sweep	345_PK	PE
1	Astragal	(door manufacturer's heavy duty standard)	00
2	Electric Power Transfer	EL-CEPT	SU
2	ElectroLynx Harness	QC-C1500 (transfer to power supply or J-box)	MK
2	ElectroLynx Harness	QC-Cxxx (transfer to electrical on door)	MK
1	Card Reader	WR01 / WR02 / WR03 / WR04 (as required)	SA
2	Position Switch	DPS	SU
2	Actuator Switch	by Section 08-7115	NO
1	Power Distribution Board	PDB-8F8R	SU
1	Power Supply	AQD4	SU
1	Power Distribution Board	PDB-8C2	SU
1	Set Wiring Diagrams	by Security Vendor	00

Application:
-Access control vendor to integrate lock with access control system.
-Card reader type determined by application.

-Power supply for Card-readers is powered by 12VDC power supply.
-Electric strike and motion sensor is powered by 24VDC power supply.
-Share power supply for exit devices with opening: "110B"
-Share power supply for card-reader from opening: "112" (hardware group 4.00)

SECURED TIME PERIOD:
Door normally closed, latched, and locked - free egress at all times.
Door monitored for door ajar or forced open - internal switch within unsecure side of latching hardware allows an individual to freely leave without sending an alarm to the access control system.
Entrance by mechanical key or valid card to card-reader.
Free egress at all times.

UNSECURED TIME PERIOD:
Unsecured period of time setup in access control system allows free entrance - free egress at all times.
Loss of power maintains security from locked side of opening - Entrance by mechanical key only - free egress at all times.

Set: 4.02
Card Reader (DPS) - Pair: Cont Hinge x CVR Exit Device (EL retraction) x Door Closer

2	Continuous Hinge	MCK-12HD EPT x Height Required	MK
1	Exit Device (exit only)	43 55 56 AD8610	SA
1	Exit Device (nightlatch)	LC 43 55 56 AD8610 106	SA
1	Cylinder	As Specified	SC
2	Pull	RM202 Mtg-Type 12XHD	RO
2	Conc Overhead Stop	1-X36	RF
2	Door Closer	351 P10	SA
2	Drop Plate	351D	SA
2	Bracket	125V	SA
2	Kit	581-2	SA
2	Spacer	63-0191	SA
1	Threshold	171A Pemkote (1/2" High)	PE
1	Set Weatherstrip	(door manufacturer's heavy duty standard)	00
2	Sweep	345_PK	PE
1	Astragal	(door manufacturer's heavy duty standard)	00
2	Electric Power Transfer	EL-CEPT	SU
2	ElectroLynx Harness	QC-C1500 (transfer to power supply or J-box)	MK
2	ElectroLynx Harness	QC-Cxxx (transfer to electrical on door)	MK
1	Card Reader	WR01 / WR02 / WR03 / WR04 (as required)	SA
2	Position Switch	DPS	SU
1	Set Wiring Diagrams	by Security Vendor	00

Application:
-Access control vendor to integrate lock with access control system.
-Card reader type determined by application.
-Power supply for Card-readers is powered by 12VDC power supply.
-Electric strike and motion sensor is powered by 24VDC power supply.
-Share power supply for exit devices from opening: "110"
-Share power supply for card-reader from opening: "112" (hardware group 4.00)

SECURED TIME PERIOD:
Door normally closed, latched, and locked - free egress at all times.
Door monitored for door ajar or forced open - internal switch within unsecure side of latching hardware allows an individual to freely leave without sending an alarm to the access control system.
Entrance by mechanical key or valid card to card-reader.
Free egress at all times.

UNSECURED TIME PERIOD:
Unsecured period of time setup in access control system allows free entrance - free egress at all times.
Loss of power maintains security from locked side of opening - Entrance by mechanical key only - free egress at all times.

Set: 4.03
Card Reader (Restroom) - Single: Storeroom Deadbolt x EL Strike x Door Closer

	Hinge	TA2314 (NRP)	MK
1	Storeroom Deadbolt Lock	LC LB 49 8251	SA
1	Cylinder	As Specified	SC
1	ElectroLynx Adaptor	2004M	HS
1	SMART Pac Bridge Rectifier	2005M3	HS
1	Electric Strike	1600-CDB-DLM	HS
1	Door Closer	351 O / P10	SA
1	Kick Plate	K1050 12" x CSK x BEV 4 Edges	RO
1	Stop	as required	RO
1	Gasketing	S88	PE
1	Sweep	345_PK	PE
1	ElectroLynx Harness	QC-C1500 (power supply to electric strike)	MK
1	Card Reader	WR01 / WR02 / WR03 / WR04 (as required)	SA
1	Set Wiring Diagrams	by Security Vendor	00

Application:
-Access control vendor to integrate lock with access control system.
-Card reader type determined by application.
-Power supply for Card-readers is powered by 12VDC power supply.
-Electric strike is powered by 24VDC power supply.
-Share power supply from opening: "112" Hardware Set (4.00)

Door normally closed, latched, and secure - free egress at all times.
Entrance by presenting a valid card to card-reader or mechanical key.
Deadbolt is projected by inside lever-turn, which changes indicator status from vacant to occupied.
Projected deadbolt denies entrance by a valid card to card-reader, entrance by mechanical key only.
Electrical Note: use electric strike's deadbolt monitor switch to deactivate card-reader.
Emergency entrance is allowed by mechanical key.
Turning inside lever handle will simultaneously retract deadbolt and latch, changes indicator status from occupied to vacant, and allows card-reader use for entrance.
Loss of power maintains door security from locked side, entrance by mechanical key only - free egress at all times.

Set: 4.04
Card Reader (DPS) - Single: Storeroom Lock x EL Strike x Surface Overhead Stop x Door Closer

	Hinge	TA2314 (NRP)	MK
1	Storeroom Lock	LC 8204	SA
1	Cylinder	As Specified	SC
1	ElectroLynx Adaptor	2004M	HS
1	SMART Pac Bridge Rectifier	2005M3	HS
1	Electric Strike	1500C	HS
1	Surf Overhead Stop	9-X36	RF
1	Door Closer	351 O	SA
1	Kick Plate	K1050 12" x CSK x BEV 4 Edges	RO
1	Gasketing	S88	PE
1	ElectroLynx Harness	QC-C1500 (power supply to electric strike)	MK
1	Card Reader	WR01 / WR02 / WR03 / WR04 (as required)	SA
1	Position Switch	DPS	SU
1	Detector	SREX-100	AK
1	Set Wiring Diagrams	by Security Vendor	00

Application:
-Access control vendor to integrate lock with access control system.
-Card reader type determined by application.
-Power supply for Card-readers is powered by 12VDC power supply.
-Electric strike and motion sensor is powered by 24VDC power supply.
-Share power supply from opening: "112" Hardware Set (4.00)

Door normally closed, latched, and locked - free egress at all times.
Door monitored for door ajar or forced open - motion sensor above unsecure side (egress side) of door allows an individual to freely leave without sending an alarm to the access control system.
Entrance by mechanical key or presenting a valid card to card-reader.
Egress allowed at all times.
Loss of power maintains door security from locked side, entrance by mechanical key only - free egress at all times.

Set: 4.05
Card Reader (DPS) - Single: Storeroom Lock x EL Strike x Door Closer

	Hinge	TA2314 (NRP)	MK
1	Storeroom Lock	LC 8204	SA
1	Cylinder	As Specified	SC
1	ElectroLynx Adaptor	2004M	HS
1	SMART Pac Bridge Rectifier	2005M3	HS
1	Electric Strike	1500C	HS
1	Door Closer	351 O / P10	SA
1	Kick Plate	K1050 12" x CSK x BEV 4 Edges	RO
1	Stop	as required	RO
1	Gasketing	S88	PE
1	ElectroLynx Harness	QC-C1500 (power supply to electric strike)	MK
1	Card Reader	WR01 / WR02 / WR03 / WR04 (as required)	SA

1	Position Switch	DPS	SU
1	Detector	SREX-100	AK
1	Set Wiring Diagrams	by Security Vendor	00

Application:
-Access control vendor to integrate lock with access control system.
-Card reader type determined by application.
-Power supply for Card-readers is powered by 12VDC power supply.
-Electric strike and motion sensor is powered by 24VDC power supply.
-Share power supply from opening: "112" Hardware Set (4.00)

Door normally closed, latched, and locked - free egress at all times.
Door monitored for door ajar or forced open - motion sensor above unsecure side (egress side) of door allows an individual to freely leave without sending an alarm to the access control system.
Entrance by mechanical key or presenting a valid card to card-reader.
Egress allowed at all times.
Loss of power maintains door security from locked side, entrance by mechanical key only - free egress at all times.

Set: 4.06
Card Reader (DPS) - Single: Storeroom Lock x EL Strike x Door Closer w/ Spring Stop Closer

	Hinge	TA2314 (NRP)	MK
1	Storeroom Lock	LC 8204	SA
1	Cylinder	As Specified	SC
1	ElectroLynx Adaptor	2004M	HS
1	SMART Pac Bridge Rectifier	2005M3	HS
1	Electric Strike	1500C	HS
1	Door Closer	351 CPS	SA
1	Kick Plate	K1050 12" x CSK x BEV 4 Edges	RO
1	Gasketing	S88	PE
1	ElectroLynx Harness	QC-C1500 (power supply to electric strike)	MK
1	Card Reader	WR01 / WR02 / WR03 / WR04 (as required)	SA
1	Position Switch	DPS	SU
1	Detector	SREX-100	AK
1	Set Wiring Diagrams	by Security Vendor	00

Application:
-Access control vendor to integrate lock with access control system.
-Card reader type determined by application.
-Power supply for Card-readers is powered by 12VDC power supply.
-Electric strike and motion sensor is powered by 24VDC power supply.
-Share power supply from opening: "112" Hardware Set (4.00)

Door normally closed, latched, and locked - free egress at all times.
Door monitored for door ajar or forced open - motion sensor above unsecure side (egress side) of door allows an individual to freely leave without sending an alarm to the access control system.
Entrance by mechanical key or presenting a valid card to card-reader.
Egress allowed at all times.

Loss of power maintains door security from locked side, entrance by mechanical key only - free egress at all times.

Set: 4.07
Card Reader (DPS) - Single: Cont Hinge x Storeroom Lock x EL Strike x Door Closer

1	Continuous Hinge	MCK-12HD x Height Required	MK
1	Storeroom Lock	LC 8204	SA
1	Cylinder	As Specified	SC
1	ElectroLynx Adaptor	2004M	HS
1	SMART Pac Bridge Rectifier	2005M3	HS
1	Electric Strike	1500C	HS
1	Conc Overhead Stop	1-X36	RF
1	Door Closer	351 P10	SA
1	Drop Plate	351D	SA
1	Bracket	125V	SA
1	Kit	581-2	SA
1	Spacer	63-0191	SA
1	Threshold	171A Pemkote (1/2" High)	PE
1	Set Weatherstrip	(door manufacturer's heavy duty standard)	00
1	Sweep	345_PK	PE
1	ElectroLynx Harness	QC-C1500 (power supply to electric strike)	MK
1	Card Reader	WR01 / WR02 / WR03 / WR04 (as required)	SA
1	Position Switch	DPS	SU
1	Detector	SREX-100	AK
1	Set Wiring Diagrams	by Security Vendor	00

Application:
-Access control vendor to integrate lock with access control system.
-Card reader type determined by application.
-Power supply for Card-readers is powered by 12VDC power supply.
-Electric strike and motion sensor is powered by 24VDC power supply.
-Share power supply from opening: "112" Hardware Set (4.00)

Door normally closed, latched, and locked - free egress at all times.
Door monitored for door ajar or forced open - motion sensor above unsecure side (egress side) of door allows an individual to freely leave without sending an alarm to the access control system.
Entrance by mechanical key or presenting a valid card to card-reader.
Egress allowed at all times.
Loss of power maintains door security from locked side, entrance by mechanical key only - free egress at all times.

Set: 4.08
Card Reader (DPS) - Single: Storeroom Lock x EL Strike x Door Closer w/ Spring Stop Closer

	Hinge (heavy weight)	T4A3386 (NRP)	MK
1	Storeroom Lock	LC 8204	SA
1	Cylinder	As Specified	SC
1	ElectroLynx Adaptor	2004M	HS

1	SMART Pac Bridge Rectifier	2005M3	HS
1	Electric Strike	1500C	HS
1	Door Closer	351 CPS	SA
1	Threshold	171A Pemkote (1/2" High)	PE
1	Gasketing	S88	PE
1	Sweep	345_PK	PE
1	ElectroLynx Harness	QC-C1500 (power supply to electric strike)	MK
1	Card Reader	WR01 / WR02 / WR03 / WR04 (as required)	SA
1	Position Switch	DPS	SU
1	Detector	SREX-100	AK
1	Set Wiring Diagrams	by Security Vendor	00

Application:
-Access control vendor to integrate lock with access control system.
-Card reader type determined by application.
-Power supply for Card-readers is powered by 12VDC power supply.
-Electric strike and motion sensor is powered by 24VDC power supply.
-Share power supply from opening: "112" Hardware Set (4.00)

Door normally closed, latched, and locked - free egress at all times.
Door monitored for door ajar or forced open - motion sensor above unsecure side (egress side) of door allows an individual to freely leave without sending an alarm to the access control system.
Entrance by mechanical key or presenting a valid card to card-reader.
Egress allowed at all times.
Loss of power maintains door security from locked side, entrance by mechanical key only - free egress at all times.

Set: 4.09
Card Reader (DPS) – Single: Mortise Exit Device (storeroom) x EL Strike x Surface Overhead Stop x Door Closer

	Hinge	TA2314 (NRP)	MK
1	Mortise Exit Device	(12) LC LD 43 8906 ET	SA
1	Cylinder	As Specified	SC
1	ElectroLynx Adaptor	2004M	HS
1	SMART Pac Bridge Rectifier	2005M3	HS
1	Electric Strike	1500C	HS
1	Surf Overhead Stop	9-X36	RF
1	Door Closer	351 O	SA
1	Kick Plate	K1050 12" x CSK x BEV 4 Edges	RO
1	Gasketing	S88	PE
1	ElectroLynx Harness	QC-C1500 (power supply to electric strike)	MK
1	Card Reader	WR01 / WR02 / WR03 / WR04 (as required)	SA
1	Position Switch	DPS	SU
1	Detector	SREX-100	AK
1	Set Wiring Diagrams	by Security Vendor	00

Application:
-Access control vendor to integrate lock with access control system.

-Card reader type determined by application.
-Power supply for Card-readers is powered by 12VDC power supply.
-Electric strike and motion sensor is powered by 24VDC power supply.
-Share power supply from opening: "112" Hardware Set (4.00)

Door normally closed, latched, and locked - free egress at all times.
Door monitored for door ajar or forced open - motion sensor above unsecure side (egress side) of door allows an individual to freely leave without sending an alarm to the access control system.
Entrance by mechanical key or presenting a valid card to card-reader.
Egress allowed at all times.
Loss of power maintains door security from locked side, entrance by mechanical key only - free egress at all times.

Set: 5.00
Card Reader (DPS) - Single: (Power Supply) Storeroom Lock x EL Strike x Door Closer w/ Spring Stop Closer

	Hinge	TA2314 (NRP)	MK
1	Storeroom Lock	LC 8204	SA
1	Cylinder	As Specified	SC
1	ElectroLynx Adaptor	2004M	HS
1	SMART Pac Bridge Rectifier	2005M3	HS
1	Electric Strike	1500C	HS
1	Door Closer	351 P10	SA
1	Stop	as required	RO
1	Threshold	171A Pemkote (1/2" High)	PE
1	Gasketing	S88	PE
1	ElectroLynx Harness	QC-C1500 (power supply to electric strike)	MK
1	Card Reader	WR01 / WR02 / WR03 / WR04 (as required)	SA
1	Position Switch	DPS	SU
1	Detector	SREX-100	AK
1	Power Distribution Board	PDB-8F8R	SU
1	Power Supply	AQS1210 (for powering card readers only)	SU
2	Power Distribution Board	PDB-8C2	SU
1	Power Supply	AQS2410 (for powering electric strikes and motion sensors)	SU
1	Set Wiring Diagrams	by Security Vendor	00

Application:
-Access control vendor to integrate lock with access control system.
-Card reader type determined by application.
-Power supply for Card-readers is powered by 12VDC power supply.
-Electric strike and motion sensor is powered by 24VDC power supply.
-Share power supply with openings: 141, 142, 143, 144A, 145, 145A

Door normally closed, latched, and locked - free egress at all times.
Door monitored for door ajar or forced open - motion sensor above unsecure side (egress side) of door allows an individual to freely leave without sending an alarm to the access control system.
Entrance by mechanical key or presenting a valid card to card-reader.

Egress allowed at all times.
Loss of power maintains door security from locked side, entrance by mechanical key only - free egress at all times.

Set: 5.01
Card Reader (DPS) - Single: Storeroom Lock x EL Strike x Door Closer

	Hinge	TA2314 (NRP)	MK
1	Storeroom Lock	LC 8204	SA
1	Cylinder	As Specified	SC
1	ElectroLynx Adaptor	2004M	HS
1	SMART Pac Bridge Rectifier	2005M3	HS
1	Electric Strike	1500C	HS
1	Door Closer	351 O / P10	SA
1	Stop	as required	RO
1	Gasketing	S88	PE
1	ElectroLynx Harness	QC-C1500 (power supply to electric strike)	MK
1	Card Reader	WR01 / WR02 / WR03 / WR04 (as required)	SA
1	Position Switch	DPS	SU
1	Detector	SREX-100	AK
1	Set Wiring Diagrams	by Security Vendor	00

Application:
-Access control vendor to integrate lock with access control system.
-Card reader type determined by application.
-Power supply for Card-readers is powered by 12VDC power supply.
-Electric strike and motion sensor is powered by 24VDC power supply.
-Share power supply from opening: "140" Hardware Set (5.00)

Door normally closed, latched, and locked - free egress at all times.
Door monitored for door ajar or forced open - motion sensor above unsecure side (egress side) of door allows an individual to freely leave without sending an alarm to the access control system.
Entrance by mechanical key or presenting a valid card to card-reader.
Egress allowed at all times.
Loss of power maintains door security from locked side, entrance by mechanical key only - free egress at all times.

Set: 5.02
Card Reader (Restroom) - Single: Storeroom Deadbolt x EL Strike x Door Closer

	Hinge	TA2314 (NRP)	MK
1	Storeroom Deadbolt Lock	LC LB 49 8251	SA
1	Cylinder	As Specified	SC
1	ElectroLynx Adaptor	2004M	HS
1	SMART Pac Bridge Rectifier	2005M3	HS
1	Electric Strike	1600-CDB-DLM	HS
1	Door Closer	351 O / P10	SA
1	Stop	as required	RO
1	Threshold	171A Pemkote (1/2" High)	PE

1	Gasketing	S88	PE
1	ElectroLynx Harness	QC-C1500 (power supply to electric strike)	MK
1	Card Reader	WR01 / WR02 / WR03 / WR04 (as required)	SA
1	Set Wiring Diagrams	by Security Vendor	00

Application:
-Access control vendor to integrate lock with access control system.
-Card reader type determined by application.
-Power supply for Card-readers is powered by 12VDC power supply.
-Electric strike is powered by 24VDC power supply.
-Share power supply from opening: "140" Hardware Set (5.00)

Door normally closed, latched, and secure - free egress at all times.
Entrance by presenting a valid card to card-reader or mechanical key.
Deadbolt is projected by inside lever-turn, which changes indicator status from vacant to occupied.
Projected deadbolt denies entrance by a valid card to card-reader, entrance by mechanical key only.
Electrical Note: use electric strike's deadbolt monitor switch to deactivate card-reader.
Emergency entrance is allowed by mechanical key.
Turning inside lever handle will simultaneously retract deadbolt and latch, changes indicator status from occupied to vacant, and allows card-reader use for entrance.
Loss of power maintains door security from locked side, entrance by mechanical key only - free egress at all times.

Set: 5.03
Card Reader (DPS) - Pair: Cont Hinge x Storeroom Lock x EL Strike x Door Closer w/ Spring Stop Closer

1	Continuous Hinge	HG305 AS x Height Required	MR
1	Continuous Hinge	HG305 CTP AS x Height Required	MR
1	Flush Bolt	2842 / 2942	RO
1	Dust Proof Strike	570	RO
1	Storeroom Lock	LC 8204	SA
1	Cylinder	As Specified	SC
1	ElectroLynx Adaptor	2004M	HS
1	SMART Pac Bridge Rectifier	2005M3	HS
1	Electric Strike	1500C	HS
1	Coordinator	2600	RO
2	Mounting Bracket	2601 (used with coordinator)	RO
2	Door Closer	351 CPS	SA
1	Threshold	171A Pemkote (1/2" High)	PE
1	Gasketing	S88	PE
2	Sweep	345_PK	PE
1	Astragal	(door manufacturer's heavy duty standard)	00
1	Electric Power Transfer	EL-CEPT	SU
1	ElectroLynx Harness	QC-C1500 (transfer to power supply or J-box)	MK
1	ElectroLynx Harness	QC-Cxxx (transfer to electrical on door)	MK
1	Card Reader	WR01 / WR02 / WR03 / WR04 (as required)	SA
2	Position Switch	DPS	SU
1	Detector	SREX-100	AK

1	Set Wiring Diagrams	by Security Vendor	00

Application:
-Access control vendor to integrate lock with access control system.
-Card reader type determined by application.
-Power supply for Card-readers is powered by 12VDC power supply.
-Electric strike and motion sensor is powered by 24VDC power supply.
-Share power supply from opening: "140" Hardware Set (5.00)

Door normally closed, latched, and locked - free egress at all times.
Door monitored for door ajar or forced open - motion sensor above unsecure side (egress side) of door allows an individual to freely leave without sending an alarm to the access control system.
Entrance by mechanical key or presenting a valid card to card-reader.
Egress allowed at all times.
Loss of power maintains door security from locked side, entrance by mechanical key only - free egress at all times.

Set: 5.04
Card Reader (DPS) - Pair: Cont Hinge x Storeroom Lock x EL Strike x Door Closer w/ Spring Stop Closer

	Hinge	TA2314 (NRP)	MK
1	Flush Bolt	2842 / 2942	RO
1	Dust Proof Strike	570	RO
1	Storeroom Lock	LC 8204	SA
1	Cylinder	As Specified	SC
1	ElectroLynx Adaptor	2004M	HS
1	SMART Pac Bridge Rectifier	2005M3	HS
1	Electric Strike	1500C	HS
1	Coordinator	2600	RO
2	Mounting Bracket	2601 (used with coordinator)	RO
2	Door Closer	351 CPS	SA
1	Gasketing	S88	PE
1	Astragal	(door manufacturer's heavy duty standard)	00
1	Electric Power Transfer	EL-CEPT	SU
1	ElectroLynx Harness	QC-C1500 (transfer to power supply or J-box)	MK
1	ElectroLynx Harness	QC-Cxxx (transfer to electrical on door)	MK
1	Card Reader	WR01 / WR02 / WR03 / WR04 (as required)	SA
2	Position Switch	DPS	SU
1	Detector	SREX-100	AK
1	Set Wiring Diagrams	by Security Vendor	00

Application:
-Access control vendor to integrate lock with access control system.
-Card reader type determined by application.
-Power supply for Card-readers is powered by 12VDC power supply.
-Electric strike and motion sensor is powered by 24VDC power supply.
-Share power supply from opening: "140" Hardware Set (5.00)

Door normally closed, latched, and locked - free egress at all times.
Door monitored for door ajar or forced open - motion sensor above unsecure side (egress side) of door allows an individual to freely leave without sending an alarm to the access control system.
Entrance by mechanical key or presenting a valid card to card-reader.
Egress allowed at all times.
Loss of power maintains door security from locked side, entrance by mechanical key only - free egress at all times.

Set: 5.05
Card Reader (DPS) - Single: Storeroom Lock x EL Strike x Door Closer

	Hinge	TA2314 (NRP)	MK
1	Storeroom Lock	LC 8204	SA
1	Cylinder	As Specified	SC
1	ElectroLynx Adaptor	2004M	HS
1	SMART Pac Bridge Rectifier	2005M3	HS
1	Electric Strike	1500C	HS
1	Door Closer	351 O / P10	SA
1	Stop	as required	RO
1	Threshold	171A Pemkote (1/2" High)	PE
1	Gasketing	S88	PE
1	ElectroLynx Harness	QC-C1500 (power supply to electric strike)	MK
1	Card Reader	WR01 / WR02 / WR03 / WR04 (as required)	SA
1	Position Switch	DPS	SU
1	Detector	SREX-100	AK
1	Set Wiring Diagrams	by Security Vendor	00

Application:
-Access control vendor to integrate lock with access control system.
-Card reader type determined by application.
-Power supply for Card-readers is powered by 12VDC power supply.
-Electric strike and motion sensor is powered by 24VDC power supply.
-Share power supply from opening: "140" Hardware Set (5.00)

Door normally closed, latched, and locked - free egress at all times.
Door monitored for door ajar or forced open - motion sensor above unsecure side (egress side) of door allows an individual to freely leave without sending an alarm to the access control system.
Entrance by mechanical key or presenting a valid card to card-reader.
Egress allowed at all times.
Loss of power maintains door security from locked side, entrance by mechanical key only - free egress at all times.

Set: 6.00
Card Reader (DPS) - Single: (Power Supply) Storeroom Lock x EL Strike x Surface Overhead Stop x Door Closer

	Hinge	TA2314 (NRP)	MK
1	Storeroom Lock	LC 8204	SA
1	Cylinder	As Specified	SC

1	ElectroLynx Adaptor	2004M	HS
1	SMART Pac Bridge Rectifier	2005M3	HS
1	Electric Strike	1500C	HS
1	Surf Overhead Stop	9-X36	RF
1	Door Closer	351 O	SA
1	Kick Plate	K1050 12" x CSK x BEV 4 Edges	RO
1	Gasketing	S88	PE
1	ElectroLynx Harness	QC-C1500 (power supply to electric strike)	MK
1	Card Reader	WR01 / WR02 / WR03 / WR04 (as required)	SA
1	Position Switch	DPS	SU
1	Detector	SREX-100	AK
1	Power Distribution Board	PDB-8F8R	SU
1	Power Distribution Board	PDB-8C2	SU
1	Power Supply	AQS1216	SU
1	Set Wiring Diagrams	by Security Vendor	00

Application:
-Access control vendor to integrate lock with access control system.
-Card reader type determined by application.
-Power supply for Card-readers is powered by 12VDC power supply.
-Electric strike and motion sensor is powered by 24VDC power supply.
-Share power supply with openings: 201, 201B, 203A, 203B, 204A, 204B, 205, 206, 207, 208, 209, 210, 211, 212, 213A, 213B

Door normally closed, latched, and locked - free egress at all times.
Door monitored for door ajar or forced open - motion sensor above unsecure side (egress side) of door allows an individual to freely leave without sending an alarm to the access control system.
Entrance by mechanical key or presenting a valid card to card-reader.
Egress allowed at all times.
Loss of power maintains door security from locked side, entrance by mechanical key only - free egress at all times.

Set: 6.01
Card Reader (DPS) - Single: Storeroom Lock x EL Strike x Door Closer w/ Spring Stop Closer

	Hinge	TA2314 (NRP)	MK
1	Storeroom Lock	LC 8204	SA
1	Cylinder	As Specified	SC
1	ElectroLynx Adaptor	2004M	HS
1	SMART Pac Bridge Rectifier	2005M3	HS
1	Electric Strike	1500C	HS
1	Door Closer	351 CPS	SA
1	Kick Plate	K1050 12" x CSK x BEV 4 Edges	RO
1	Gasketing	S88	PE
1	ElectroLynx Harness	QC-C1500 (power supply to electric strike)	MK
1	Card Reader	WR01 / WR02 / WR03 / WR04 (as required)	SA
1	Position Switch	DPS	SU
1	Detector	SREX-100	AK
1	Set Wiring Diagrams	by Security Vendor	00

Application:
-Access control vendor to integrate lock with access control system.
-Card reader type determined by application.
-Power supply for Card-readers is powered by 12VDC power supply.
-Electric strike and motion sensor is powered by 24VDC power supply.
-Share power supply from opening: "202" Hardware Set (6.00)

Door normally closed, latched, and locked - free egress at all times.
Door monitored for door ajar or forced open - motion sensor above unsecure side (egress side) of door allows an individual to freely leave without sending an alarm to the access control system.
Entrance by mechanical key or presenting a valid card to card-reader.
Egress allowed at all times.
Loss of power maintains door security from locked side, entrance by mechanical key only - free egress at all times.

Set: 6.02
Card Reader (DPS) - Pair: Storeroom Lock x EL Strike x Door Closer w/ Spring Stop Closer

	Hinge	TA2314 (NRP)	MK
1	Flush Bolt	2842 / 2942	RO
1	Dust Proof Strike	570	RO
1	Storeroom Lock	LC 8204	SA
1	Cylinder	As Specified	SC
1	ElectroLynx Adaptor	2004M	HS
1	SMART Pac Bridge Rectifier	2005M3	HS
1	Electric Strike	1500C	HS
1	Coordinator	2600	RO
2	Mounting Bracket	2601 (used with coordinator)	RO
2	Door Closer	351 CPS	SA
2	Kick Plate	K1050 12" x CSK x BEV 4 Edges	RO
1	Gasketing	S88	PE
1	Astragal	S771	PE
1	Astragal	(door manufacturer's heavy duty standard)	00
1	Electric Power Transfer	EL-CEPT	SU
1	ElectroLynx Harness	QC-C1500 (transfer to power supply or J-box)	MK
1	ElectroLynx Harness	QC-Cxxx (transfer to electrical on door)	MK
1	Card Reader	WR01 / WR02 / WR03 / WR04 (as required)	SA
1	Position Switch	DPS	SU
1	Detector	SREX-100	AK
1	Set Wiring Diagrams	by Security Vendor	00

Application:
-Access control vendor to integrate lock with access control system.
-Card reader type determined by application.
-Power supply for Card-readers is powered by 12VDC power supply.
-Electric strike and motion sensor is powered by 24VDC power supply.
-Share power supply from opening: "202" Hardware Set (6.00)

Door normally closed, latched, and locked - free egress at all times.
Door monitored for door ajar or forced open - motion sensor above unsecure side (egress side) of door allows an individual to freely leave without sending an alarm to the access control system.
Entrance by mechanical key or presenting a valid card to card-reader.
Egress allowed at all times.
Loss of power maintains door security from locked side, entrance by mechanical key only - free egress at all times.

Set: 6.03
Card Reader (DPS) - Single: Cont Hinge x Storeroom Lock x EL Strike x Door Closer

1	Continuous Hinge	MCK-12HD x Height Required	MK
1	Storeroom Lock	LC 8204	SA
1	Cylinder	As Specified	SC
1	ElectroLynx Adaptor	2004M	HS
1	SMART Pac Bridge Rectifier	2005M3	HS
1	Electric Strike	1500C	HS
1	Conc Overhead Stop	1-X36	RF
1	Door Closer	351 P10	SA
1	Drop Plate	351D	SA
1	Bracket	125V	SA
1	Kit	581-2	SA
1	Spacer	63-0191	SA
1	Threshold	171A Pemkote (1/2" High)	PE
1	Set Weatherstrip	(door manufacturer's heavy duty standard)	00
1	ElectroLynx Harness	QC-C1500 (power supply to electric strike)	MK
1	Card Reader	WR01 / WR02 / WR03 / WR04 (as required)	SA
1	Position Switch	DPS	SU
1	Detector	SREX-100	AK
1	Set Wiring Diagrams	by Security Vendor	00

Application:
-Access control vendor to integrate lock with access control system.
-Card reader type determined by application.
-Power supply for Card-readers is powered by 12VDC power supply.
-Electric strike and motion sensor is powered by 24VDC power supply.
-Share power supply from opening: "202" Hardware Set (6.00)

Door normally closed, latched, and locked - free egress at all times.
Door monitored for door ajar or forced open - motion sensor above unsecure side (egress side) of door allows an individual to freely leave without sending an alarm to the access control system.
Entrance by mechanical key or presenting a valid card to card-reader.
Egress allowed at all times.
Loss of power maintains door security from locked side, entrance by mechanical key only - free egress at all times.

Set: 6.04
Card Reader (DPS) - Single: Storeroom Lock x EL Strike x Door Closer

	Hinge	TA2314 (NRP)	MK
1	Storeroom Lock	LC 8204	SA
1	Cylinder	As Specified	SC
1	ElectroLynx Adaptor	2004M	HS
1	SMART Pac Bridge Rectifier	2005M3	HS
1	Electric Strike	1500C	HS
1	Door Closer	351 O / P10	SA
1	Kick Plate	K1050 12" x CSK x BEV 4 Edges	RO
1	Stop	as required	RO
1	Gasketing	S88	PE
1	ElectroLynx Harness	QC-C1500 (power supply to electric strike)	MK
1	Card Reader	WR01 / WR02 / WR03 / WR04 (as required)	SA
1	Position Switch	DPS	SU
1	Detector	SREX-100	AK
1	Set Wiring Diagrams	by Security Vendor	00

Application:
-Access control vendor to integrate lock with access control system.
-Card reader type determined by application.
-Power supply for Card-readers is powered by 12VDC power supply.
-Electric strike and motion sensor is powered by 24VDC power supply.
-Share power supply from opening: "202" Hardware Set (6.00)

Door normally closed, latched, and locked - free egress at all times.
Door monitored for door ajar or forced open - motion sensor above unsecure side (egress side) of door allows an individual to freely leave without sending an alarm to the access control system.
Entrance by mechanical key or presenting a valid card to card-reader.
Egress allowed at all times.
Loss of power maintains door security from locked side, entrance by mechanical key only - free egress at all times.

Set: 6.05
Card Reader (Restroom) - Single: Storeroom Deadbolt x EL Strike x Door Closer

	Hinge	TA2314 (NRP)	MK
1	Storeroom Deadbolt Lock	LC LB 49 8251	SA
1	Cylinder	As Specified	SC
1	ElectroLynx Adaptor	2004M	HS
1	SMART Pac Bridge Rectifier	2005M3	HS
1	Electric Strike	1500C	HS
1	Door Closer	351 O / P10	SA
1	Stop	as required	RO
1	Threshold	171A Pemkote (1/2" High)	PE
1	Gasketing	S88	PE
1	ElectroLynx Harness	QC-C1500 (power supply to electric strike)	MK
1	Card Reader	WR01 / WR02 / WR03 / WR04 (as required)	SA
1	Position Switch	DPS	SU
1	Detector	SREX-100	AK
1	Set Wiring Diagrams	by Security Vendor	00

Application:
-Access control vendor to integrate lock with access control system.
-Card reader type determined by application.
-Power supply for Card-readers is powered by 12VDC power supply.
-Electric strike is powered by 24VDC power supply.
-Share power supply from opening: "202" Hardware Set (6.00)

Door normally closed, latched, and secure - free egress at all times.
Entrance by presenting a valid card to card-reader or mechanical key.
Deadbolt is projected by inside lever-turn, which changes indicator status from vacant to occupied.
Projected deadbolt denies entrance by a valid card to card-reader, entrance by mechanical key only.
Electrical Note: use electric strike's deadbolt monitor switch to deactivate card-reader.
Emergency entrance is allowed by mechanical key.
Turning inside lever handle will simultaneously retract deadbolt and latch, changes indicator status from occupied to vacant, and allows card-reader use for entrance.
Loss of power maintains door security from locked side, entrance by mechanical key only - free egress at all times.

Set: 6.06
Card Reader (DPS) - Single: Storeroom Lock x EL Strike x Door Closer w/ Spring Stop Closer

	Hinge (heavy weight)	T4A3386 (NRP)	MK
1	Storeroom Lock	LC 8204	SA
1	Cylinder	As Specified	SC
1	ElectroLynx Adaptor	2004M	HS
1	SMART Pac Bridge Rectifier	2005M3	HS
1	Electric Strike	1500C	HS
1	Door Closer	351 CPS	SA
1	Threshold	171A Pemkote (1/2" High)	PE
1	Gasketing	S88	PE
1	ElectroLynx Harness	QC-C1500 (power supply to electric strike)	MK
1	Card Reader	WR01 / WR02 / WR03 / WR04 (as required)	SA
1	Position Switch	DPS	SU
1	Detector	SREX-100	AK
1	Set Wiring Diagrams	by Security Vendor	00

Application:
-Access control vendor to integrate lock with access control system.
-Card reader type determined by application.
-Power supply for Card-readers is powered by 12VDC power supply.
-Electric strike and motion sensor is powered by 24VDC power supply.
-Share power supply from opening: "202" Hardware Set (6.00)

Door normally closed, latched, and locked - free egress at all times.
Door monitored for door ajar or forced open - motion sensor above unsecure side (egress side) of door allows an individual to freely leave without sending an alarm to the access control system.
Entrance by mechanical key or presenting a valid card to card-reader.
Egress allowed at all times.

Loss of power maintains door security from locked side, entrance by mechanical key only - free egress at all times.

Set: 20.00
Cylinder Only

1 Cylinder	As Specified	SC

Set: 23.00
Access Controlled - Gate

2 Cane Bolt	By Gate Supplier	ST
2 Gate Lock	GL1 x M (monitor) x Fail Safe	SU
2 Door Loop	DL-2	AK
1 Emergency Door Release	GBS-1	AK
2 Electromechanical Bar	WEMB	SU
2 Position Switch	MSS-1G	SU
1 Power Distribution Board	PDB-8F8R	SU
1 Power Distribution Board	PDB-8C2	SU
2 Battery Backup	B-12-5	SU
1 Power Supply	BPS-12-6	SU
1 Outdoor Type Access Control Reader	By Security Contractor	OT
1 Gate	Remaining Gate Hardware by Gate Company	00
2 Bracket	FMK	SU
2 Back Plate	by Gate Vendor (mounting exit device)	OT

Application:
-Share power supply with opening 100B
-Proper back plate behind egress device required, furnished by Gate Co., to avoid bypassing security.

Door(s) normally closed and locked - free egress at all times.
Gate doors held in open position by "Cane Bolts"
Ingress as authorized by access control system.
Egress by use of electromechanical push bar or emergency pull station as a secondary means of releasing doors (mounted on egress side).
Loss of power allows free egress at all times, free ingress in approximately 7 hours after power loss.

Set: 23.01
Access Controlled - Gate

2 Cane Bolt	By Gate Supplier	ST
2 Gate Lock	GL1 x M (monitor) x Fail Safe	SU
2 Cylinder	As Specified	SC
2 Door Loop	DL-2	AK
1 Emergency Door Release	GBS-1	AK
2 Electromechanical Bar	WEMB	SU
2 Position Switch	MSS-1G	SU
1 Outdoor Type Access Control Reader	By Security Contractor	OT
1 Gate	Remaining Gate Hardware by Gate Company	00

2 Bracket	FMK	SU
2 Back Plate	by Gate Vendor (mounting exit device)	OT

Application:
-Share power supply from opening 100A
-Proper back plate behind egress device required, furnished by Gate Co., to avoid bypassing security.

Door(s) normally closed and locked - free egress at all times.
Gate doors held in open position by "Cane Bolts"
Ingress by valid card to card-reader.
Egress by use of electromechanical push bar or emergency pull station as a secondary means of releasing doors (mounted on egress side).
Loss of power allows free egress at all times, free ingress in approximately 7 hours after power loss.

END OF SECTION 087100

DOOR AND FRAME SCHEDULE

MARK	LOCATION	POWER REQUIRED	DOOR SIZE WIDTH	DOOR SIZE HEIGHT	DOOR SIZE THICKNESS	DOOR MATERIAL	DOOR TYPE	FRAME MATERIAL	FRAME TYPE	FRAME HEAD	FRAME JAMB	FIRE RATING	AAOS Project HW Set	COMMENTS
001	OFFICIAL'S VESTIBULE		3'-0"	7'-0"	1 3/4"	FRP	D1	AL	F2	H3	J3		1.00	
002	OFFICIAL'S VESTIBULE		3'-0"	7'-0"	1 3/4"	HM	D1	HM	F2	H2	J2		1.00	
002A	OFFICIAL'S LOCKERS		3'-0"	7'-0"	1 3/4"	HM	D1	HM	F2	H2	J2		1.02	
002B	OFFICIAL'S LOCKERS		3'-0"	7'-0"	1 3/4"	HM	D1	HM	F1	H1	J1		1.02	
003	VISITOR VESTIBULE		3'-0"	7'-0"	1 3/4"	FRP	D1	AL	F2	H3	J3		1.01	
004	VISITOR VESTIBULE		3'-0"	7'-0"	1 3/4"	HM	D1	HM	F2	H2	J2		1.02	
005	VISITOR MANAGER		3'-0"	7'-0"	1 3/4"	HM	D5	HM	F2	H2	J2		1.03	
006	VISITOR LOCKERS		3'-0"	7'-0"	1 3/4"	HM	D1	HM	F2	H2	J2		1.02	
007A	FIELD LEVEL STORAGE		6'-0"	8'-0"	1 3/4"	FRP	D1	AL	F3	H3	J3		1.03	
007B	FIELD LEVEL STORAGE		3'-0"	7'-0"	1 3/4"	FRP	D1	AL	F2	H3	J3		1.04	
007C	FIELD LEVEL STORAGE		16'-0"	10'-0"	3"	STL	D3	STL	F3	8/A521			20.00	SEE S3/A601 FOR SILL DETAIL, OVERHEAD ROLLING DOOR
010A	VEST.		3'-0"	7'-2"	1 3/4"	AL	D2	AL	SEE SP. ELEVS.	H8	J8		2.00	
010B	HOME LOCKERS		3'-0"	7'-2"	1 3/4"	AL	D2	AL	SEE SP. ELEVS.	H8	J8		2.00	
011A	VEST.		3'-0"	7'-2"	1 3/4"	AL	D2	AL	SEE SP. ELEVS.	H8	J8		2.01	
011B	LJ HOME SHOWERS		3'-0"	7'-2"	1 3/4"	AL	D2	AL	SEE SP. ELEVS.	H8	J8		2.00	
012	HOME MANAGER		3'-0"	7'-0"	1 3/4"	HM	D5	HM	F2	H2	J2		2.01	
012A	MANAGER TOILET		3'-0"	7'-0"	1 3/4"	HM	D1	HM	F2	H2	J2		2.00	
013	MECH		3'-4"	7'-0"	1 3/4"	HM	D1	HM	F2	H2	J2		2.03	
014	HOME LOCKERS		3'-0"	7'-0"	1 3/4"	HM	D1	HM	F2	H2	J2		2.02	
017A	LAUNDRY		3'-0"	7'-0"	1 3/4"	HM	D1	HM	F2	H2	J2		2.02	
017B	LAUNDRY		3'-0"	7'-0"	1 3/4"	HM	D1	HM	F2	H2	J2		2.02	
018	LJ HOME MANAGER		3'-0"	7'-0"	1 3/4"	HM	D5	HM	F2	H2	J2		2.07	
018A	LJ HOME MANAGER		3'-0"	7'-0"	1 3/4"	HM	D1	HM	F2	H2	J2		2.03	
019	ELEC.		6'-4"	7'-0"	1 3/4"	HM	D1	HM	F2	H2	J2		2.04	
~~020C~~	~~CONCOURSE LEVEL STORAGE~~		~~6'-0"~~	~~8'-0"~~	~~1 3/4"~~	~~FRP~~	~~D1~~	~~AL~~	~~F3~~	~~H3~~	~~J3~~		~~3.00~~	
020E	CONCOURSE LEVEL STORAGE		3'-0"	7'-0"	1 3/4"	HM	D1	HM	F2	H3	J3		3.00	
021A	LJ TRAINING		3'-0"	7'-0"	1 3/4"	HM	D1	HM	F2	H2	J2		2.07	
022	STORAGE		6'-4"	7'-0"	1 3/4"	FRP	D1	AL	F3	H3	J3		3.05	
100	MECH/ELEC		6'-4"	7'-0"	1 3/4"	FRP	D1	AL	F3	H3	J3		3.00	
101A	CONCESSION STORAGE		6'-4"	7'-0"	1 3/4"	FRP	D1	AL	F3	H3	J3		3.05	
101B	1ST BASE CONCESSIONS		6'-4"	7'-0"	1 3/4"	HM	D1	HM	F2	H3	J3		3.01	
102A	1ST BASE CONCESSIONS		3'-0"	7'-0"	1 3/4"	HM	D1	HM	F2	H3	J3		3.02	
102B	1ST BASE CONCESSIONS		10'-0"	5'-10"	1/2"	STL	D3	STL	F3	H7	J7		20.00	OVERHEAD ROLLING DOOR
102C	1ST BASE CONCESSIONS		10'-0"	5'-10"	1/2"	STL	D3	STL	F3	H7	J7		20.00	OVERHEAD ROLLING DOOR
103	MEN'S RESTROOM		3'-0"	7'-0"	1 3/4"	FRP	D1	AL	F2	H3	J3		3.03	
104	FAMILY RR		3'-0"	7'-0"	1 3/4"	FRP	D1	AL	F2	H3	J3		3.04	
105	WOMEN'S RESTROOM		3'-0"	7'-0"	1 3/4"	FRP	D1	AL	F2	H3	J3		3.03	
106	JANITOR		3'-0"	7'-0"	1 3/4"	FRP	D1	AL	F2	H3	J3		3.07	
110	MERCHANDISE		6'-0"	8'-0"	1 3/4"	AL	D2	AL	SEE SP. ELEVS.	6/A522			4.01	
110B	MERCHANDISE		6'-0"	7'-0"	1 3/4"	AL	D2	AL	SEE SP. ELEVS.	9/A524	3/A501		4.02	
112	MERCHANDISE		3'-0"	7'-0"	1 3/4"	WD	D1	HM	F1	H1	J1		4.00	
113	TOILET		3'-0"	7'-0"	1 3/4"	WD	D1	HM	F1	H1	J1		4.03	
114	MERCHANDISE		3'-0"	7'-0"	1 3/4"	WD	D1	HM	F1	H1	J1		4.04	
117	OPEN OFFICE		3'-0"	7'-0"	1 3/4"	WD	D1	HM	F4	H1	J1		4.05	
118	RECEPTION		3'-0"	7'-0"	1 3/4"	WD	D1	HM	F4	H1	J1		4.05	
119	MECH/ELEC		3'-0"	7'-0"	1 3/4"	WD	D1	HM	F1	H1	J1		4.06	
120	CONFERENCE		3'-0"	7'-0"	1 3/4"	WD	D1	HM	F4	H1	J1		4.06	
125	RECEPTION		3'-0"	7'-0"	1 3/4"	AL	D2	AL	SEE SP. ELEVS.	9/A524	3/A501		4.07	
130	ELEVATOR MACHINE ROOM		3'-0"	7'-0"	1 3/4"	FRP	D1	AL	F2	H3	J3		4.00	
140	WOMEN'S RESTROOM		3'-0"	7'-0"	1 3/4"	FRP	D1	AL	F2	H3	J3		5.00	
141	JANITOR		3'-0"	7'-0"	1 3/4"	HM	D1	HM	F2	H3	J3		5.01	
142	MEN'S RESTROOM		3'-0"	7'-0"	1 3/4"	FRP	D1	AL	F2	H3	J3		5.05	
143	FAMILY RR		3'-0"	7'-0"	1 3/4"	FRP	D1	AL	F2	H3	J3		5.03	
144A	3RD BASE CONCESSIONS		3'-0"	7'-0"	1 3/4"	FRP	D1	AL	F2	H3	J3		5.05	
144B	3RD BASE CONCESSIONS		10'-0"	5'-10"	1/2"	STL	D3	STL	F3	H7	J7		20.00	OVERHEAD ROLLING DOOR
144C	3RD BASE CONCESSIONS		10'-0"	5'-10"	1/2"	STL	D3	STL	F3	H7	J7		20.00	OVERHEAD ROLLING DOOR
145	STORAGE		6'-4"	7'-0"	1 3/4"	FRP	D1	AL	F2	H3	J3		5.03	
145A	STORAGE		6'-4"	7'-0"	1 3/4"	HM	D1	HM	F2	H2	J2		5.04	
201	SUITE 1		3'-0"	7'-0"	1 3/4"	AL	D2	AL	SEE SP. ELEVS.	H4	J4		8.03	
201B	SUITE 1		3'-0"	7'-0"	1 3/4"	AL	D2	AL	SEE SP. ELEVS.	1/A525	4/A503		8.03	
202	MEDIA		3'-0"	7'-0"	1 3/4"	WD	D1	HM	F1	H1	J1		8.00	
203A	SUPPORT		3'-0"	7'-0"	1 3/4"	WD	D1	HM	F1	H1	J1		8.01	
203B	SUPPORT		3'-0"	7'-0"	1 3/4"	WD	D1	HM	F1	H1	J1		8.02	
204A	MEDIA		3'-0"	7'-0"	1 3/4"	AL	D2	AL	SEE SP. ELEVS.	7/A526	J4		8.03	
204B	MEDIA		3'-0"	7'-0"	1 3/4"	AL	D2	AL	SEE SP. ELEVS.	7/A526	J4		8.03	
205	VISITOR RADIO		3'-0"	7'-0"	1 3/4"	WD	D1	HM	F1	H1	J1		8.04	
206	MEDIA		3'-0"	7'-0"	1 3/4"	WD	D1	HM	F1	H1	J1		8.04	
207	CLOSET		3'-0"	7'-0"	1 3/4"	WD	D1	HM	F1	H1	J1		8.04	
208	TOILET		3'-0"	7'-0"	1 3/4"	FRP	D1	AL	F1	H5	J5		9.05	
209	TOILET		3'-0"	7'-0"	1 3/4"	FRP	D1	AL	F1	H5	J5		9.05	
210	TOILET		3'-0"	7'-0"	1 3/4"	FRP	D1	AL	F1	H5	J5		9.02	
211	FOOD SERVING SUPPORT		3'-4"	7'-0"	1 3/4"	FRP	D1	AL	F1	H5	J5		9.00	
212	LARGE SUITE		3'-0"	7'-0"	1 3/4"	AL	D2	AL	SEE SP. ELEVS.	H4	J4		9.03	
213A	SUITE 2		3'-0"	7'-0"	1 3/4"	AL	D2	AL	SEE SP. ELEVS.	H4	J4		9.03	
213B	SUITE 2		3'-0"	7'-0"	1 3/4"	AL	D2	AL	SEE SP. ELEVS.	1/A525	6/A503		9.03	
216	SODA COUNTER		8'-0"	7'-0"	1/2"	STL	D3	STL	F3	12/A524	4/A502		26.00	
217	SODA COUNTER		8'-6"	7'-0"	1/2"	STL	D3	STL	F3	12/A524	4/A502		26.00	
G001	ENTRY GATES		4'-0"	8'-0"	1 3/4"								23.00	
G002	ENTRY GATES		4'-0"	8'-0"	1 3/4"								23.00	
G003	ENTRY GATES		4'-0"	8'-0"	1 3/4"								23.00	
G004	ENTRY GATES		4'-0"	8'-0"	1 3/4"								23.00	
G005			9'-0"	8'-0"	1 3/4"								23.00	CENTER FIELD GATE
G009			8'-0"	8'-0"	1 3/4"								23.00	THIRD BASELINE OUTFIELD GATE

DOOR HARDWARE GENERAL NOTES:
- ALL DOORS ON PROJECT TO RECEIVE CARD READER ACCESS CONTROL
- ALL EXTERIOR FLUSH DOORS SHALL BE FRP PANEL WITH ALUMINUM FRAME - DOD SPECIALTY

DOOR ELEVATIONS

DOOR FRAME ELEVATIONS

S3 / A601 — S3 SILL DETAIL
1 1/2" = 1'-0"

J3 / A601 — J3 JAMB DETAIL
3" = 1'-0"

CITY OF LAFAYETTE

AMERICAN STRUCTUREPOINT INC

Kettelhut CONSTRUCTION, INC.

Applied Engineering Services

REITANO DESIGN GROUP

DESIGN 27 TECHNOLOGY + ACOUSTICS

LOEB STADIUM RENOVATION

COLUMBIAN PARK

CERTIFIED BY

ISSUANCE INDEX
DATE:
06.12.19
PROJECT PHASE:
CONSTRUCTION SET

REVISION SCHEDULE		
NO.	DESCRIPTION	DATE
1	ADDENDUM 2	03.26.19
B	PR 005	10.10.19

Project Number 2015.02410

DOOR SCHEDULES

A601

10/10/2019 10:28:31 AM

CHANGE ORDER

CONSTRUCTION MANAGER-ADVISER EDITION

Owner	☐
Construction Manager	☐
Architect	☐
Contractor	☐
Field	☐
Other	☐

PROJECT: *(Name and address)*	**Loeb Stadium** **Main Street and Wallace Street** **Lafayette, Indiana**	CHANGE ORDER NO.:	**BP-8-4**
		INITIATION DATE:	**March 26, 2020**
TO CONTRACTOR: *(Name and address)*	**Huston Electric, Inc.** **P. O. Box 4297** **Lafayette, IN 47903-4297**	PROJECT NOS.:	**6617**
		CONTRACT FOR:	**BP #8 - Electrical**
		CONTRACT DATE:	**June 4, 2019**

The Contract is changed as follows:

6617.042 - American Structurepoint Proposal Request #8, as it pertains to door hardware changes	**Deduct**	**-$1,049.00**
6617.049 - American Structurepoint Proposal Request #9, as it pertains toadditional conduit for future expansion.	**Add**	**$17,069.00**
	TOTAL	**$16,020.00**

Not valid until signed by the Owner, Construction Manager, Architect and Contractor.

The original (Contract Sum) (~~Guaranteed Maximum Price~~) was……..	$	**2,097,366.00**
Net change by previously authorized Change Orders……..	$	**-73,038.00**
The (Contract Sum) (~~Guaranteed Maximum Price~~) prior to this Change Order was…….	$	**2,024,328.00**
The (Contract Sum) (~~Guaranteed Maximum Price~~) will be (increased) ~~(decreased) (unchanged)~~ by this Change Order……..……..……..……..	$	**16,020.00**
The new (Contract Sum) (~~Guaranteed Maximum Price~~) including this Change Order will be……	$	**2,040,348.00**
The Contract Time will be (~~increased~~) (~~decreased~~) (unchanged) by …….……		**(0) days**
The dated of Substantial Completion as of the date of this Change Order therefore is ……...……..……		**Unchanged**

NOTE: This summary does not reflect changes in the Contract Sum, Contract Time or Guaranteed Maximum Price which have been authorized by Construction Change Directive.

Kettelhut Construction, Inc.	American Structurepoint, Inc.
CONSTRUCTION MANAGER	ARCHITECT
740 Sagamore Parkway S., Lafayette, IN 47905	9025 River Road, Indianapolis, IN 46240
ADDRESS	ADDRESS
D. Alley Gamb 03/30/2020	Dan McClay 03.30.2020
BY DATE	BY DATE
Huston Electric, Inc.	City of Lafayette, Indiana Board Public Works and Safety
CONTRACTOR	OWNER
PO Box 4297, Lafayette, IN 47903-4297	20 North 6th Street, Lafayette, IN 47901
ADDRESS	ADDRESS
Brady McKinney 3/27/2020	Jeremy L. Grenard 4/15/2020
BY DATE	BY DATE

KETTELHUT CONSTRUCTION, INC. General Contractor/Construction Manager

740 Sagamore Parkway South
Lafayette, IN 47905
(765) 447-2181
Fax (765) 447-7122

March 17, 2020

Mr. Dan McCloskey
American Structurepoint, Inc.
9025 River Road, Suite 200
Indianapolis, IN 46240

Re: Loeb Stadium Renovation
Lafayette, Indiana
Kettelhut Project No. 6617

Gentlemen:

Enclosed please find cost documentation from applicable Contractors regarding Proposal Request No. 008, as it pertains to hardware changes. We have yet to receive responses from Contractors labeled N/R, but do not anticipate any other costs or credits than those shown below.

1.	BP #1 – General Trades	JR Kelly Co., Inc.	<$ 2,788.00>
2.	BP #2 – Masonry	James Scharer Masonry, Inc.	N/R
3.	BP #3 – Steel	Almet, Inc.	N/R
4.	BP #4 – Roofing	Horning Roofing & Sheet Metal Co., LLC	N/R
5.	BP #5 – Alum.	Central Indiana Glass & Glazing, Inc.	<$ 198.00>
6.	BP #6 – Fire Sprinklers	Dalmatian Fire, Division of Shambaugh & Son, L.P.	N/R
7.	BP #7 – Mechanical	D. A. Dodd, LLC	N/R
8.	BP #8 – Electrical	Huston Electric, Inc.	<$ 1,049.00>
9.	BP #9 – Sports Lighting	Custer Electric, Inc.	N/R
10.	BP #10 – Scoreboard		
11.	BP #11 – Turf	Sprinturf, Inc.	N/R
12.	BP #12 – Stadium Seat	Irwin Seating Company	N/R
13.	BP #13 – Food Service	C&T Design & Equipment Co.	N/R
			<$ 4,035.00>

After your review, if this cost data is approved by your firm and the Owner, please advise in order for a Change Order to be initiated.

Sincerely,

KETTELHUT CONSTRUCTION, INC.

D. Alex Gonzalez
Executive Vice President

DAG: jas

Enclosure

cc: Field Office
City of Lafayette w/enclosure
Field Order 6617.042

HUSTON
powering innovation

EXTRA WORK AUTHORIZATION # _____ CUSTOMER FIELD ORDER # PR08

SHEET # 1 OF 2

DATE: 3/16/2020
JOB # LC1179
PO # _____

CUSTOMER: Kettelhut
CONTRACT # 765-447-2181
PROJECT # _____

HUSTON REP: Brady McKinney

CUSTOMER REP: Alex Gonzalez

DESCRIPTION OF WORK: PR08 changing of door card reader locations. Remove door rough in and cabling to 002, 004, 002A, 011B, 010B, 102B, 102C, 1444C, 1444B. Add rough in only to elevator doors on both levels.

LABOR

NAME	TRADE/Electrical	ACTUAL HOURS WORKED			PAY RATE			AMOUNT
		REG.	OT	DBL	REG	OT	DBL	
	Electrician	-6			84			$ (504.00)
		1			84			$ 84.00
								$ -
								$ -
								$ -
								$ -
								$ -
								$ -
								$ -
								$ -
								$ -
								$ -
								$ -
								$ -
TOTAL								$ (420.00)

MATERIAL	QTY	COST	AMOUNT
Cat cable	-1000	0.42	-420.00
3/4" conduit	-90	0.75	-67.50
box and support	-9	8.75	-78.76
3/4" conduit	20	0.75	15.00
box and support	2	8.75	17.50
			0.00
			0.00
			0.00
			0.00
			0.00
			0.00
			0.00
			0.00
			0.00
			0.00
			0.00
			0.00
			0.00
			0.00
			0.00
			0.00
			0.00
			0.00
			0.00
			0.00
			0.00
			0.00
			0.00
		Subtotal	-533.75
		7% sales tax	
		Total	$ (533.75)

HUSTON
powering innovation

EXTRA WORK AUTHORIZATION # 0 CUSTOMER FIELD ORDER # PR08

SHEET # 2 OF 2

SUBS, EQUIPMENT & TOOLS			
DESCRIPTION	TIME	RATE	AMOUNT
			$ -
		$ -	$ -
		$ -	$ -
		$ -	$ -
Subtotal			$ -
Mark-Up			$ -
TOTAL			$ -

FINAL COST BREAKDOWN		
Labor Total	$	(420.00)
Material Total	$	(533.75)
Subs, Equipment & Tools	$	-
Labor and Material Total	$	(953.75)
Insurance/Bond (1%)		
Safety (3%)		
Engineering (3%)		
Subtotal	$	(953.75)
Mark-Up 10%	$	(95.38)
Total	$	(1,049.13)

Remarks:	

HUSTON Rep. Signature

Customer Rep. Signature

KETTELHUT CONSTRUCTION, INC. General Contractor/Construction Manager

740 Sagamore Parkway South
Lafayette, IN 47905
(765) 447-2181
Fax (765) 447-7122

March 17, 2020

Mr. Dan McCloskey
American Structurepoint, Inc.
9025 River Road, Suite 200
Indianapolis, IN 46240

Re: Loeb Stadium Renovation
Lafayette, Indiana
Kettelhut Project No. 6617

Revision #1

Gentlemen:

Enclosed please find cost documentation from applicable Contractors regarding Proposal Request No. 009 outfield conduits. We have yet to receive responses from Contractors labeled N/R, but do not anticipate any other costs or credits than those shown below.

1.	BP #1 – General Trades	JR Kelly Co., Inc.	N/R
2.	BP #2 – Masonry	James Scharer Masonry, Inc.	N/R
3.	BP #3 – Steel	Almet, Inc.	N/R
4.	BP #4 – Roofing	Horning Roofing & Sheet Metal Co., LLC	N/R
5.	BP #5 – Alum.	Central Indiana Glass & Glazing, Inc.	N/R
6.	BP #6 – Fire Sprinklers	Dalmatian Fire, Division of Shambaugh & Son, L.P.	N/R
7.	BP #7 – Mechanical	D. A. Dodd, LLC	N/R
8.	BP #8 – Electrical	Huston Electric, Inc.	$ 17,069.00
9.	BP #9 – Sports Lighting	Custer Electric, Inc.	N/R
10.	BP #10 – Scoreboard		
11.	BP #11 – Turf	Sprinturf, Inc.	N/R
12.	BP #12 – Stadium Seat	Irwin Seating Company	N/R
13.	BP #13 – Food Service	C&T Design & Equipment Co.	N/R
			$ 17,069.00

After your review, if this cost data is approved by your firm and the Owner, please advise in order for a Change Order to be initiated.

Sincerely,

KETTELHUT CONSTRUCTION, INC.

D. Alex Gonzalez
Executive Vice President

DAG: jas

Enclosure

cc: Field Office
City of Lafayette w/enclosure
Field Order 6617.049

HUSTON
powering innovation

EXTRA WORK AUTHORIZATION # _____ CUSTOMER FIELD ORDER # PR09

SHEET # 1 OF 2

DATE: 3/10/2020
JOB # LC1179
PO # _____

CUSTOMER: Kettelhut
CONTRACT # 765-447-2181
PROJECT # KCI FO 6617.049

HUSTON REP: Brady McKinney

CUSTOMER REP: Alex Gonzalez

DESCRIPTION OF WORK: Add 3 4" PVC conduits for future Duke use. This will be sch. 40 and will not be encased in concrete.

LABOR								
NAME	TRADE/Electrical	ACTUAL HOURS WORKED			PAY RATE			AMOUNT
		REG.	OT	DBL	REG	OT	DBL	
	Electrician	104			84	120	156	$ 8,736.00
								$ -
								$ -
								$ -
								$ -
								$ -
								$ -
								$ -
								$ -
								$ -
								$ -
								$ -
								$ -
								$ -
TOTAL								$ 8,736.00

MATERIAL	QTY	COST	AMOUNT
4" PVC	1300	1.45	1,885.00
pull string	1	56.00	56.00
			0.00
			0.00
			0.00
			0.00
			0.00
			0.00
			0.00
			0.00
			0.00
			0.00
			0.00
			0.00
			0.00
			0.00
			0.00
			0.00
			0.00
			0.00
			0.00
			0.00
			0.00
			0.00
			0.00
			0.00
			0.00
		Subtotal	1,941.00
		7% sales tax	
		Total	$ 1,941.00

HUSTON
powering innovation

EXTRA WORK AUTHORIZATION # 0 CUSTOMER FIELD ORDER # PR09

SHEET # 2 OF 2

SUBS, EQUIPMENT & TOOLS			
DESCRIPTION	TIME	RATE	AMOUNT
WW contracting	1	$ 4,400.00	$ 4,400.00
		$ -	$ -
		$ -	$ -
		$ -	$ -
Subtotal			$ 4,400.00
Mark-Up			$ 440.00
TOTAL			$ 4,840.00

FINAL COST BREAKDOWN	
Labor Total	$ 8,736.00
Material Total	$ 1,941.00
Subs, Equipment & Tools	$ 4,840.00
Labor and Material Total	$ 15,517.00
Insurance/Bond (1%)	
Safety (3%)	
Engineering (3%)	
Subtotal	$ 15,517.00
Mark-Up 10%	$ 1,551.70
Total	$ 17,068.70

Remarks:	

HUSTON Rep. Signature

Customer Rep. Signature

LAFAYETTE HOUSING AUTHORITY

CITY OF LAFAYETTE

April 14, 2020

Board of Public Works & Safety
City of Lafayette
20 North 6th Street
Lafayette, IN 47901

RE: Agreement between Lafayette Housing Consortium and Faith Community Development Corporation 2019 Project #1 – N 8th

Dear Board Members,

Faith Community Development Corporation has been recertified as a CHDO (Community Housing Development Organization) and is authorized to use CHDO Reserve funds to acquire and renovate property for sale to eligible homebuyers. This agreement, in the amount of $60,000.00, commits part of their 2019 HOME funding award for the property at 1025 North 8th Street.

This agreement has been reviewed by the Deputy City Attorney and is submitted for your approval.

Please feel free to call me at 771-1309 with any questions.

Thank you.

Regards,

Valerie Oakley
Project Manager
Lafayette Housing Authority
Grant Administrator

FAITH COMMUNITY DEVELOPMENT CORPORATION
2019-2020
2019 PROJECT #1 – N 8th

This Agreement is entered into this _____day of _____, 2020, by and between Lafayette Housing Consortium ("Consortium"), a Participating Jurisdiction ("PJ") under the HOME Program, and Faith Community Development Corporation ("the Grantee"), an Indiana not-for-profit-corporation.

Whereas, the Consortium, composed of the City of Lafayette (City), which is its Lead Agency, the City of West Lafayette, the Town of Battle Ground, and the County of Tippecanoe, Indiana, has received a grant allocation under Title II of the National Affordable Housing Act of 1990 from the United States Department of Housing and Urban Development ("HUD"), administered by HUD according to law and regulations found at 24 CFR Part 92, CFDA #14.239; and

Whereas, pursuant to the terms of the grant, the Consortium is required to undertake certain activities to provide and expand the supply of decent, safe, sanitary and affordable housing in its jurisdiction; and

Whereas, pursuant to a certain Agreement for Grant Administration dated September 19, 2017, by and between the Consortium and Lafayette Housing Authority ("LHA"), LHA will serve as grant administrator for the Program; and

Whereas, the Grantee desires to participate in the Program by acquiring, renovating, and selling homes to persons of low to moderate income; and

Whereas, the Grantee has submitted a 2019 Agency Request for Funds Form requesting HOME funding up to One Hundred Sixty Thousand Dollars ($160,000.00) for acquisition and renovation of two (2) properties to be rehabilitated for owner occupied, single family housing units and/or for homebuyer financing assistance in the purchase of those properties; and

Whereas, on March 20, 2019, the Consortium approved funding in the total amount of One Hundred Sixty Thousand Dollars ($160,000.00) ("2019 Total Grant"); and

Whereas, 2019 Project #1 – N 8th is projected to use up to Sixty Thousand Dollars ($60,000.00) of HOME funding; and

Whereas, Sixty Thousand Dollars ($60,000.00) of the 2019 Total Grant is allocated to 2019 Project #1 at 1025 North 8th Street, Lafayette, Indiana in the Grantee's affordable housing program.

NOW, THEREFORE, the Consortium and the Grantee do mutually agree as follows:

I. USE OF FUNDS

A. Purpose

The Consortium agrees to fund up to Sixty Thousand Dollars ($60,000.00) to the Grantee for the acquisition and renovation costs of 1025 North 8th Street, Lafayette, Indiana, to be rehabilitated to an owner occupied, single family housing unit and/or for homebuyer financing assistance in the purchase of the property, as described in the Grantee's 2019 Agency Request for Funds Form, which is incorporated into this Agreement by reference. The Grantee hereby represents and warrants that all information contained in said Agency Request for Funds Form is true and correct and that it contain no misrepresentations, falsifications, intentional omissions, or concealment of material facts, and that all information contained, and assurances and certifications made in the said Agency Request for Funds Form are incorporated into this Agreement as if fully set forth within the terms of this Agreement.

A description of the tasks to be performed under this Agreement, a schedule for completing the tasks and an estimated budget as described in the Grantee's said Agency Request for Funds Form is attached as Exhibit A. The Grantee will notify LHA of any changes in the budget or schedule.

B. Use of Funds

Eligible uses of said funds are limited to pre-development expenses as approved by LHA, property acquisition, renovation, or homebuyer financing assistance of the HOME assisted units. Said homebuyers will be persons of low to moderate income and must meet income guidelines established by HUD and shall not have household income exceeding 80% of area median income.

Architectural, engineering and other professional services costs directly related to 1025 North 8th Street, Lafayette, Indiana, incurred within nine (9) months prior to execution of this agreement are considered HOME eligible costs.

C. Local Match

The Grantee represents and certifies that it will provide documentation for any match eligible funding used for the HOME-assisted properties in conjunction with this project prior to drawing the final HOME payment for the assisted property. The Consortium agrees to provide the remaining amount to total Seven Thousand, Five Hundred Dollars ($7,500.00), or twelve and one half percent of HOME funds, from banked match as a local, non-federal contribution to the Project, which may be considered by the Consortium as meeting local match obligations in the Program.

II. DISBURSEMENT OF FUNDS

A. Payment

The Consortium agrees, upon submission of properly documented claims by Grantee, to disburse Program funds to Grantee up to the maximum amount of the grant. Program funds shall be requested only after eligible expenses have been incurred or the program funds are actually needed to pay eligible costs. Program funds shall be used only for the completion of activities approved by LHA. A percentage of project costs, as determined by LHA, for each property will be held until occupancy by the eligible homebuyer. All claims for payment shall be submitted to LHA on or before December 31, 2020 on properly executed claim forms along with documentation requirements listed in Exhibit B, as required by LHA. The disbursement of funds under the Program shall be contingent upon the receipt of funds by the Consortium from HUD.

B. Security

Prior to the release of Program funds, the Grantee shall sign a Promissory Note, in a form approved by LHA, in the amount of Sixty Thousand Dollars ($60,000.00) payable to the Consortium in the event the Grantee fails to fulfill the requirements of this agreement, which Promissory Note shall be forgivable upon the sale of the HOME assisted unit to a qualified buyer. Notwithstanding the foregoing sentence, the Consortium may require approved pre-development expenses drawn under this Agreement to be repaid from project income or may allow the expenses to be incorporated into additional project financing. Repayment of pre-development expenses may be waived by Consortium if project is deemed infeasible or in the event of impediments to project development.

To secure the Promissory Note, the Grantee shall grant the Consortium a mortgage on the assisted sites as they are identified, in a form approved by LHA, which mortgage shall be recorded prior to the release of Program funds for said assisted site

At sale to an eligible homebuyer, the HOME funds shall be secured by mortgage, and promissory note on the property in a form approved by LHA.

C. Repayment

Should a HOME assisted property be sold by Grantee prior to the sale to an eligible homebuyer, the entire amount of assistance allocated to the property will be repaid to the Consortium from the proceeds, unless prior written permission to substitute another qualified Owner is obtained from LHA. The new Owner must sign a written agreement with security to abide by all terms and conditions reasonably required by LHA.

Should this HOME assisted project be sold by the initial homebuyer prior to the end of the period of affordability, the HOME assistance will be repaid according to the Consortium's Resale Recapture Guidelines in Exhibit C.

Should the HOME assisted project be terminated before completion for any reason, the HOME funds expended on the project must be repaid to the Consortium.

III. TIME OF PERFORMANCE

All funds provided under this contract must be disbursed on or before December 31, 2020. The terms of this Agreement shall be in effect until the end of the affordability period for the housing unit assisted under this Agreement, as described in Section V. C.

Although it is possible to amend the agreement as needed, under no circumstance can the project completion deadline extend beyond four (4) years. A project that is not completed within four (4) years is considered terminated and any HOME funds expended must be repaid to the Consortium.

The sale of the house must be completed within nine (9) months of construction completion. If the house is not successfully sold to a qualified buyer within nine (9) months of construction completion, the house automatically converts to an affordable rental property.

IV. PROGRAM INCOME/PROJECT PROCEEDS

This project will generate funds considered CHDO proceeds. The Grantee will retain the CHDO proceeds for use in other HOME eligible activities or other uses approved by LHA to advance affordable housing and benefit low-income families within the Consortium, but only after the written approval of LHA for such use. To receive written approval from LHA, the Grantee shall submit a request on the form prescribed by LHA. Grantee will document the amount of proceeds generated and their subsequent use in accordance with the Lafayette Consortium CHDO Proceeds Policy which has been provided to Grantee and is incorporated into this Agreement as if fully set forth within the terms of this Agreement.

V. PROJECT REQUIREMENTS

A. Applicability

The requirements of this section apply to all HOME assisted properties, which are referred to as the HOME project. Repayment to the Consortium of any HOME funds will be required if the HOME project does not meet the project requirements for any time during the affordability period.

B. Income Limits

In accordance with 24 CFR 92.217, Grantee shall acquire, renovate and sell the property to an income eligible household who will occupy the purchased property as their primary residence for the entire period of affordability. Income is defined as that found at 24 CFR 5.609. An income eligible household is one whose annual income is at or below 80% of area median income (AMI). HUD determines area median income on an annual basis, based on geographic area and family size and usually publishes updated information during the first quarter of each calendar year. Income limits can be found on the HUD website at http://www.hud.gov/offices/cpd/affordablehousing/programs/home/limits/income/index.cfm. Grantee is responsible for using the correct income limits when determining income eligibility for HOME Program funds. Household income must be verified using source documentation, in accordance with 24 CFR 92.203(b)(2). LHA must review and approve supporting documentation before Grantee goes to closing with the buyer.

C. Period of Affordability

The affordability period for the HOME-assisted property shall be determined and provided by LHA to the Grantee, upon project completion. The affordability period can begin only after all title transfer requirements and construction work have been performed and the project complies with the HOME requirements (including property standards), the final drawdown for the project has been disbursed, and project completion information has been entered into HUD's Integrated Disbursement and Information System (IDIS). The Grantee is responsible for providing beneficiary information to LHA.

The affordability period shall continue for five (5), ten (10) or fifteen (15) years, subject to the amount and type of assistance received, from that date unless modified as allowed under the HOME program. The Grantee **shall ensure affordability through placing a promissory note and a recorded lien, in formats approved by the Community Development Department, upon the property.** A copy of the promissory note and lien will be submitted to the Community Development Department as documentation of the project's continued affordability.

D. Principal Residence

Each HOME assisted house must be the principal residence of the beneficiary during the period of affordability in accordance with 24 CFR 92.254(a)(3). To document the project's continued affordability, the Grantee shall notify the homebuyer of annual residency verification requirements and shall enter into an agreement with homebuyer requiring the homebuyer to annually verify residency to LHA. The Agreement with the homebuyer may be by separate contract or contained in a mortgage as approved by LHA.

E. Acceptable Forms of Ownership

Each HOME assisted house must be purchased by a homebuyer through a fee simple title.

F. Maximum Property Value

HOME regulations require that housing created or acquired and rehabilitated with HOME funds must be modest in nature, and affordable to a low-income buyer. The initial purchase price of a property by the Grantee, the after-rehabilitation value, and the sales price to the initial homebuyer of homeownership units assisted with HOME funds shall not exceed 95 percent of the area median purchase price for single family housing, as determined by HUD. Grantee must determine the after-rehabilitation value using a method approved by LHA. Grantee shall repay program funds to the Consortium within thirty days of Grantee's noncompliance with these affordability requirements at 92 CFR 250 and those at 92 CFR 254.

G. Rehabilitation and Property Standards

The Grantee agrees that it will comply with all applicable housing, building and public health codes, ordinances and zoning ordinances, and that the units shall at all times be fit and habitable. All HOME units must meet at the minimum Section 8 Housing Quality Standards and local housing and rehabilitation codes when completed. Newly constructed units must meet Model Energy Code standards. In addition, projects that involve restoration of historic windows must follow the Lafayette Community Development Department Window Restoration Protocol Policy.

H. Assignment and Transfer

The Grantee shall not assign or transfer any interest in this Agreement without prior written consent from LHA.

I. Relocation and Acquisition.

The Grantee agrees to comply with the provisions of the Uniform Relocation Assistance and Real Property Acquisition Policies Act of 1970 (42 U.S.C. 4601) and 49 CFR 24.

J. Labor Standards

When applicable for construction or rehabilitation of affordable housing with twelve (12) or more units assisted by HOME funds, the Grantee agrees to comply with the labor standards provision of 24 CFR 92.354 and related local requirements which may be issued from time to time by LHA. The Grantee shall include in applicable construction contract the provisions of federal law imposing labor standards on federally assisted construction.

K. Taxes and Insurance

The Grantee agrees to keep all taxes on the property paid and current until sale of the property to an eligible homebuyer. The Grantee shall maintain sufficient insurance to cover the cost of replacement due to loss by fire, theft, or accidental damage.

L. HUD-insured Financing

The Grantee agrees that financing secured by a mortgage insured by HUD will not be used in connection with renovation of this project.

M. Individual Activity Status

Each loan provided under this Agreement shall be set up in the federal information database system as an individual activity. The Grantee understands and agrees that the individual project will remain open and not be considered closed until the following HUD requirements are met:

1. Funds are drawn from the treasury account (through the Claim process),
2. complete close out documentation is received by LHA, and
3. complete activity documentation is entered into the federal information database system and the activity status is changed from Underway to Closed in the database system.

N. Historic Preservation Restrictions

The Grantee shall contact City's Economic Development Department to request that the Historic Preservation Commission designate the Property, if eligible, as a Local Historic District.

O. Subsidy Layering and Underwriting

The Grantee agrees to provide all information deemed necessary, including all sources and uses of funds, by LHA to determine a reasonable level of profit or return on the owner's or developer's investment in a project. Grantee further agrees to provide all information deemed necessary to assist LHA in the assessment of market condition of the neighborhood where the project is located.

P. Housing Counseling

HOME regulations require that all homebuyers of HOME assisted properties attend housing counseling. Prior to closing on the house, the homebuyers must attend a live 8-hour homebuyer counseling conducted by a HUD certified homebuyer counseling agency or an equivalent program approved by LHA.

Q. Prohibition of Charging Fees not Customary

HOME regulations prohibit owners from charging fees that are not customary. Grantee is prohibited from charging servicing, loan origination, processing, inspection, or other fees that represent the cost of providing HOME assistance.

VI. ADMINISTRATIVE REQUIREMENTS

A. Uniform Administrative Requirements.

The Grantee shall comply with all applicable federal administrative requirements, 2 CFR Chapter I, Chapter II, Part 200, et. al. "Uniform Administrative Requirements, Cost Principals, and Audit Requirements for Federal Awards" (Omni-Circular or Uniform Administrative Requirements) effective as of December 26, 2014.

Code of Federal Regulations (CFR) is available online at http://www.ecfr.gov/. This document is also available by request from LHA.

B. Documentation and Record Keeping

The Grantee shall ensure that sufficient records are maintained to enable LHA to determine whether the terms of this Agreement and the requirements of 24 CFR 92.508 (a) have been met.

Such records shall include but not be limited to information such as name, address, income determination, family size, race, age, leasing arrangements and housing inspections.

C. Retention of Records

Records shall be maintained in accordance with the requirements prescribed by HUD or LHA with respect to all matters covered by this Agreement. The Grantee shall ensure that all records pertinent to this Agreement are retained as specified in 24 CFR 92.508(c). Records must be retained for five years after the end of the period of affordability terminates.

D. Reporting

At such times and in such forms as HUD or LHA may require, there shall be furnished to HUD or LHA such statements, records, data and information as HUD or LHA may request pertaining to matters covered by this Agreement.

Grantee shall submit to LHA quarterly progress reports according to the following schedule:

Activities conducted during:	Report due:
July 1 – September 30	October 10
October 1 – December 31	January 10
January 1 – March 30	April 10
April 1 – June 30	July 10

Such reports shall summarize the progress/status of this HOME assisted activity, including receipt and expenditure of loan repayments. A final report shall also be due thirty (30) days after all tasks and activities covered by this Agreement are completed by Grantee. Additionally, Grantee shall provide statistical data with respect to services provided for persons benefited under this Agreement.

E. Non-expendable Property

1. Inventory. The Grantee shall keep inventory records, acceptable to LHA on all non-expendable property purchased under this Agreement. The Grantee shall submit an inventory of all items at the end of the Program year and resubmit it each fiscal year with revisions as necessary.
2. Insurance and Maintenance for all Non-expendable Property Purchased Under This Agreement. The Grantee shall maintain sufficient insurance to cover the cost of replacement due to loss by fire, theft, or accidental damage. The Grantee shall also be responsible for the maintenance and upkeep of all such property.

F. Performance Monitoring

LHA will monitor the performance of the Grantee under this Agreement as required by 24 CFR 92.504 (d).

G. Audits and Inspections

All project records with respect to any matters covered by this Agreement shall be made available to the Consortium, its designees, or the Federal government, at any time during normal business hours, as often as the Consortium or LHA deems necessary, to audit, examine, and make excerpts or transcripts of all relevant data. Any deficiencies noted in the audit reports must be fully cleared by the Grantee within 30 days after receipt. Failure to comply with the above audit requirements will constitute a violation of this Agreement.

The Grantee hereby agrees to have an annual agency audit or review, whichever is applicable, conducted in accordance with current OMB policies and to submit a copy to LHA. In addition to any applicable requirements of current OMB policies, the Grantee shall separately classify and designate information regarding Consortium HOME funds to include the CFDA title, number and award year.

1. Non-profit organizations that spend $750,000 or more annually in federal awards shall have a single or program-specific audit conducted for that year in accordance with 2 CFR Chapter I, Chapter II, Part 200, et. al.. Program-specific audits are only allowed if the Grantee expends federal awards under only one federal program. For purposes of determining the amount of federal assistance expended, all federal assistance shall be considered, including that which is received directly from a federal agency, or passed through a state or local government, or through non-profit organizations, or any combination thereof.
2. Non-profit organizations that expend less than $750,000 annually in federal awards shall be exempt from an audit conducted in accordance with 2 CFR Chapter I, Chapter II, Part 200, et. al., although their records must be available for review (e.g., inspections, evaluations). These agencies are required by the City to submit "Reduced Scope" audits (e.g., financial audit, performance audits). They may choose to have a program audit conducted for each federal award in accordance with federal laws and regulation governing the program in which they participate.
3. When the requirements of 2 CFR Chapter I, Chapter II, Part 200, et. al. apply, or when the Grantee elects to comply with 2 CFR Chapter I, Chapter II, Part 200, et. al., an audit shall be conducted for each fiscal year for which the federal awards attributable to this contract have been received by the Grantee. A copy of the audit report must be completed within 9 months after the end of the fiscal year and the audit must be received by the City no later than 30 days of receipt of the auditor's report(s).
4. Each audit shall cover a time period of not more than twelve months and an audit shall be submitted covering each assisted period until all the assistance received from this contract has been reported.
5. If the Grantee is found in non-compliance with these audit requirements, the Grantee may be required to refund financial assistance received from the Consortium.

VII. OTHER FEDERAL OR STATE REQUIREMENTS

A. Applicability

The requirements of this section apply to all units assisted with HOME funds.

B. Religious Criteria

The Grantee hereby certifies in accordance with 24 CFR 92.257, there will be no religious or membership criteria for applicants or tenants of this Project. It further agrees that funds provided under this Agreement shall not be provided to religious organizations for any activity, including secular activities or utilized for any religious activity to promote religious interests, or for the benefit of any religious organization. The Grantee understands and certifies that HOME funds and activities must be separate (in terms of time and location) from explicitly religious activities.

C. Drug Free Workplace

The Grantee shall comply with the provisions of Title 41 Chapter 10, U.S.C., Drug-free Workplace.

D. Equal Opportunity and Fair Housing

The Grantee shall not exclude from participation in the Program, or deny benefits to any person on the grounds of race, color, national origin, religion, Vietnam-era or disabled veteran status, familial status, sex or status with regard to public assistance under the Program. In addition, the Grantee will comply with the following:

1. The requirements of the Fair Housing Act (42 U.S.C. 3601-20) and implementing regulations at 24 CFR 100; Executive Order 11063, as amended by Executive Order 12259 and implementing regulations issued at 24 CFR, Part 1, all of which require equal opportunity in housing and related facilities provided by Federal financial assistance;
2. The prohibitions against discrimination on the basis of age under the Age Discrimination Act of 1975 (42 U.S.C. 6101-6107) and implementing regulations at 24 CFR 146, and the prohibitions against discrimination against handicapped individuals under Section 504 of the Rehabilitation Act of 1973 (29 U.S.C. 794) and implementing regulations at 24 CFR8;
3. The prohibitions against discrimination against handicapped individuals under Section 504 of the Rehabilitation Act of 1973 (29 U.S.C. 794) and implementing regulations at 24 CFR8, which prohibits discrimination against the individuals with disabilities or handicaps in any Federally assisted program;
4. The requirements of Executive Order 11246 (2 CFR 1964-55, Equal Employment Opportunity), and the implementing regulations issued at 41 CFR chapter 60;
5. The Fair Housing Amendments Act of 1988, which prohibits discrimination in the sale or rental of housing on the basis of a handicap or because there are children in a family;
6. The requirements of Title IV of the Civil Rights Act of 1964 as amended, Section 104(b) and Section 109 of Title I of the Housing and Community Development Act of 1974 as amended;
7. The requirements of the Americans with Disabilities Act of 1990; and
8. The requirements of non-discrimination in employment and contracting opportunities laws, regulations, and executive orders referenced in 24 CFR 570.607, as revised by Executive Order 13279.

9. The requirements of Section 3 of the Housing and Urban Development Act of 1968 (12 U.S.C. 1701U), which requires that:
    a. The work to be performed under this contract is subject to the requirements of Section 3 of the Housing and Urban Development Act of 1968, as amended, 12 U.S.C. 1701u ("Section 3"). The purpose of Section 3 is to ensure that employment and other economic opportunities generated by HUD assistance or HUD-assisted projects covered by Section 3, shall, to the greatest extent feasible, be directed to low- and very low-income persons, particularly persons who are recipients of HUD assistance for housing.
    b. The parties to this contract agree to comply with HUD's regulations in 24 CFR Part 135, which implements Section 3. As evidenced by their execution of this contract, the parties to this contract certify that they are under no contractual or other impediment that would prevent them from complying with the Part 135 regulations.
    c. The Grantee agrees to include this Sections 3 clause in every contract or subcontract subject to compliance with regulations in 24 CFR Part 135, and agrees to take appropriate action, as provided in an applicable provision of the contract or subcontract or in this Section 3 clause, upon a finding that the contractor or subcontractor is in violation of the regulations in 24 CFR Part 135. The Grantee will not contract or subcontract with any contractor or subcontractor where the Grantee has notice or knowledge the contractor or subcontractor has been found in violation of regulations in 24 CFR Part 135.
    d. Noncompliance with HUD's regulations in 24 CFR Part 135 may result in sanctions, termination of this contract for default, and debarment or suspension from future HUD assisted contracts.
10. The requirements of Equal Access to Housing in HUD Programs Regardless of Sexual Orientation or Gender Identity, as shown in 24 CFR Parts 5, 200, 203, 236, 400, 570, 574, 882, 891, and 982.

E. Affirmative Marketing Program

The Grantee agrees to comply with the requirements of 24 CFR 92.351 regarding following an affirmative marketing program for HOME assisted housing as described in Exhibit D.

F. Minority Business Outreach

The Grantee agrees to comply with the requirements of Executive Orders 11625, 12432 and 12138 concerning Minority and Women's Business Enterprise, which encourages the participation of minority and women owned business in the benefits of the Program by:

1. Contacting minority businesses which offer services needed by the organization in carrying out the Program with copies of any advertisements outlining information on where, when, and how to submit bids or proposals for such work; and
2. Keeping records on contracts made to minority and women businesses and any correspondence received from such businesses for any contracts let through the Program, and relaying this information to LHA.

HOME projects that are publicized in the local electronic and print media will include specific mention of the desire of the Consortium and its HOME recipients to work with women and minority business owners.

The Grantee may obtain a list of state certified minority and woman-owned businesses by contacting or visiting the website of the Minority and Women's Business Enterprises Division of the State of Indiana Department of Administration. The Grantee is also encouraged to contact other appropriate groups for assistance in identifying new businesses that are women or minority enterprises.

G. Environmental

The Grantee agrees to comply with the provisions of the National Environmental Policy Act of 1969 (NEPA) (42 U.S.C. 4321 et. Seq.) as it is applied at 24 CFR 58, including any requirements which may be imposed by LHA as a result of its responsibility for environmental review, decision making and action under NEPA.

The Grantee shall provide to LHA, or other approved Environmental Review Officer, all information necessary to complete an Environmental Assessment and a Section 106 Review. Such information shall be provided before the commencement of any activity provided for herein. All renovations must be approved through the Section 106 Historic Review Process before execution of any rehabilitation contracts or sale of the property. All HOME funding is contingent upon LHA approval through the NEPA Environmental review and Section 106 Historic Review process.

H. Prohibition of and Elimination of Lead-Based Paint Hazards

Notwithstanding any other provision adopted by applicable governmental units, the Grantee agrees to comply with the Lead-Based Paint Poisoning Prevention Act (42 U.S.C. 4821 et. Seq.) and its regulations set forth in 24 CFR 35 concerning, but not limited to, lead hazard evaluation, lead hazard reduction , safe work practices, testing, prohibition and abatement of lead-based paint in HUD associated housing. Every contract or subcontract, including painting, pursuant to which such federally assisted construction or rehabilitation is performed, shall include appropriate provisions prohibiting the use of lead-based paint and use of safe work practices. Applicable properties assisted under this Agreement that will undergo or have undergone some renovation conducted by the Grantee or contractors hired by the Grantee shall pass a clearance examination by a qualified contractor and safe work practices shall be used by all contractors disturbing paint surfaces, regardless of funding sources for the renovation.

I. Conflict of Interest

No officer, employee, consultant, elected or appointed official of the Consortium, or its designees or agents, member of the governing body of the Consortium or the Grantee (and no one with whom they have family or business ties) who exercises any functions or responsibilities with respect to the Program during his or her tenure or for one year thereafter, shall have any personal or financial benefit, direct or indirect, in any contract or subcontract, or proceeds thereof, for work to be performed in connection with the Program assisted under this Agreement. Exceptions to these provisions may be granted on a case-by-case basis as described at 24 CFR 92.356(d) and (e). The Grantee agrees that it will incorporate into every written contract the following provisions:

> INTEREST OF CONTRACTOR AND EMPLOYEES: The Contractor covenants that no person who presently exercises any functions or responsibilities in connection with the HOME Program, and no one with whom they have family of business ties, has any financial benefit, direct or indirect, in this Contract.

J. Debarment and Suspension

The Grantee certifies that neither it, its principals, nor its contractors and subcontractors and their respective principals, are presently debarred, suspended, proposed for debarment, declared ineligible, or voluntarily excluded from participation in this transaction by the Consortium or any Federal agency.

K. Hatch Act

The Grantee agrees that no funds provided, nor personnel employed under this Agreement, shall be, in any way or to any extent, engaged in the conduct of political activities in violation of Chapter 15 of Title V U.S.C.

L. Lobbying Certification

The Grantee certifies that:

1. No Federal appropriated funds have been paid or will be paid, by or on behalf of the Grantee to any person for influencing or attempting to influence an officer or employee of any agency, a Member of Congress, an officer or employee of Congress, or an employee of a Member of Congress in connection with the awarding of any Federal contract, the making of any Federal grant, the making of any Federal loan, the entering into of any cooperative agreement, and the extension, continuation, renewal, amendment or modification of any Federal contract, grant, loan, or cooperative agreement.

2. If any funds other than Federal appropriated funds have been paid or will be paid to any person for influencing or attempting to influence an officer or employee of any agency, a Member of Congress, an officer or employee of Congress, or an employee of a Member of Congress in connection with this Federal contract, grant, loan, or cooperative agreement, the Grantee shall complete and submit Standard Form – LL, "Disclosure Form to Report Lobbying", in accordance with its instructions.

3. The Grantee shall require that the language of this certification be included in the award documents for all sub-awards at all tiers (including subcontracts, sub-grants, and contracts under grants, loans, and cooperative agreements) and that all sub-recipients shall certify and disclose accordingly.

4. This certification is a material representation of fact upon which reliance was placed when this transaction was made or entered into. Submission of this certification is a prerequisite for making or entering into this transaction which is imposed by Section 1352, Title 31, U.S.C. Any person who fails to file the required certification shall be subject to a civil penalty of not less than $10,000 and not more than $100,000 for each failure.

M. Compliance with IC 22-5-1.7 – E-Verify Program

Grantee must enroll in and verify the work eligibility status of all newly hired employees of the Grantee through the E-Verify program operated by the United States Department of Homeland Security. If the E-Verify program ceases to exist, the Grantee will not be required to verify the work eligibility status of newly hired employees through the E-Verify program. The Grantee shall execute an affidavit affirming that the Grantee has enrolled in and is participating in the E-

Verify program and affirming that the Grantee does not knowingly employ an unauthorized alien.

N. Prohibition of Contracting with Businesses that Invest in Iran

For the duration of the Term of this Agreement, Grantee hereby certifies under penalties of perjury that it does not engage in investment activities in Iran as more particularly described in Indiana Code 5-22-16.5.

O. Federal Funding Accountability and Transparency Act of 2006 (FFATA)

FFATA reporting requirements will apply to any HOME Agreement in the amount of $25,000 or greater. The Grantee must provide any information needed pursuant to these requirements. This includes entity information, the unique identifier of the Grantee, the unique identifier of the Grantee's parent if applicable, and relevant executive compensation data, if applicable. See subsection 3 below regarding executive compensation data).

a. Data Universal Numbering System (DUNS) number
Pursuant to FFATA reporting requirements and in order to receive funding under this Agreement, the Grantee shall provide LHA with a valid Dun & Bradstreet (D&B) Data Universal Numbering System (DUNS) number that identifies the Grantee. A DUNS number may be requested online at http://fedgov.dnb.com/webform.

b. Central Contractor Registration (CCR)
The Grantee shall register in the Central Contractor Registry (CCR), which is the primary registrant database for the US Federal Government, and shall enter any information required by FFATA into the CCR, update the information at least annually after the initial registration, and maintain its status in the CCR through the Term of this Agreement. Information regarding the process to register or update information in the CCR can be obtained at www.sam.gov.

c. Executive Compensation
The Grantee shall report the names and total compensation of the five (5) most highly compensated officers of the Grantee in CCR if the Grantee in the preceding fiscal year received eighty percent (80%) or more of its annual gross revenues from Federal contracts and Federal financial assistance (as defined at 2 CFR 170.320) and $25,000,000 or more in annual gross revenues from Federal contracts and federal financial assistance (as defined at 2 CFR 170.320); and if the public does not have access to this information about the compensation of the senior executives of the entity through periodic reports filed under section 13(a) or 15(d) of the Securities Exchange Act of 1934 (15 U.S.C. §§ 78m(a), 78o(d)) or section 6104 of the Internal Revenue Code of 1986. The Grantee may certify that it received less than eighty percent (80%) of annual gross revenues from the federal government, received less than $25,000,000 of its annual gross revenues from the federal government, already provides executive compensation to the Securities Exchange Commission, or meets the Internal Revenue Code exemption, and will not be required to submit executive compensation data into the CCR under FFATA, provided, that the Grantee shall still register and submit the other data requested.

VIII. GENERAL CONDITIONS

A. General Compliance

The Grantee agrees to ensure compliance with all applicable federal, state, and local laws and regulations governing the funds provided under this Agreement including the requirements of the HOME program at 24 CFR 92 and pursuant regulations and policies. The Grantee has reviewed, or has had a reasonable opportunity to review, and agrees to abide by all applicable Federal rules and regulations, as amended from time to time, including but not limited to those federal rules and regulations referred to in this Agreement. Unearned payments under this Agreement may be suspended or terminated upon refusal to accept any additional conditions that may be imposed by HUD at any time or if the grant to the Consortium under the Act is suspended or terminated. References in this Agreement to particular federal or state laws, rules, regulations, and others shall include any applicable amendments thereto and replacements thereof.

B. Claims Against Consortium or LHA

The Grantee agrees to defend, indemnify and save harmless the Consortium and/or LHA from any and all claims of any nature whatsoever which may arise from the Grantee's performance of this Agreement; provided, however, that nothing contained in this Agreement shall be construed as rendering the Grantee liable for acts of the Consortium, its officers, agents or employees.

C. Terms of Default

If Grantee materially fails to comply with any term of this Agreement, including, but not limited to:

1. Failure to comply with any of the rules, regulations or provisions referred to herein , or such statutes, regulations, executive orders, and HUD guidelines, policies or directives as may become applicable at any time;
2. Failure, for any reason, of the Grantee to fulfill in a timely and proper manner its obligations under this Agreement;
3. Ineffective or improper use of funds provided under this Agreement; or
4. Submission by the Grantee to LHA reports that are incorrect or incomplete in any material respect

said action(s) shall be considered default by the Grantee. Upon default by the Grantee, LHA shall give the Grantee 10 days written notice to cure any default. A default under this Agreement, in the discretion of the Consortium, may be considered a default of any other Agreement between the Grantee and Consortium for any HOME Funds program. The failure to cure any default within 10 days may result in the Consortium taking enforcement action as described in Section VIII Paragraph D.

D. Enforcement

Upon the failure of the Grantee to cure any default, the Consortium may take one or more of the following actions:

1. Temporarily withhold cash payments, under this Agreement and/or any other Agreement between Consortium and Grantee concerning HOME Funds programs, pending correction of the deficiency by the Grantee;
2. Disallow all or part of the cost of the activity or action not in compliance;

3. Wholly or partly suspend or terminate the current award for the Grantee's program and/or any award for any other HOME Fund program funded to Grantee by the Consortium;
4. Withhold further awards for the program and/or awards for any other HOME Fund program funded to the Grantee by the Consortium;
5. Take other remedies that may be legally available or provided for in 24 CFR 85.43, including repayment of all funds provided to Grantee by the Consortium.

In addition to the enforcement actions listed above, the Consortium shall be entitled to collection of its costs and expenses, including reasonable attorney fees, incurred by the Consortium or LHA in enforcing this Agreement.

E. Suspension or Termination
Upon suspension or termination under Section VIII Paragraph D, costs of the Grantee incurred during suspension or after termination of an award are not allowable unless LHA expressly authorizes them in the notice of suspension or termination. Certain costs during suspension or after termination which are necessary and not reasonably avoidable are allowable if the conditions set forth in 24 CFR 85.43(c) are met.

F. Termination for Convenience
This Agreement may be terminated for convenience under the conditions and upon the terms set forth in 24 CFR 85.44.

G. Binding Effect
This Agreement shall be binding upon and shall inure to the benefit of the parties hereto and their respective successors and assigns; provided, however, that this Agreement may not be assigned by either party without the express written consent of the other party.

H. Entire Agreement and Invalidation. The provisions of this agreement shall constitute a complete expression of the parties hereto. Invalidation of any one of these covenants and conditions by judgment or decree in court shall not affect any other of the provisions hereof, which shall remain in full force and effect.

I. Amendment
This Agreement may be amended at any time by mutual agreement of all parties.

J. Conditional Approval
This Agreement is conditional upon the release and receipt of HUD funding.

K. Authority to Execute
The Grantee certifies that its governing body has duly adopted as an official resolution, motion or similar action authorizing the execution of this Agreement, including all understandings and assurances contained herein; and directing and authorizing the person identified as the official representative of the Grantee to execute this Agreement.

L. Publicity and Promotion
The Consortium, LHA and Grantee mutually agree that either party is permitted to publicize and promote the activities funded under this Agreement. The Consortium, LHA and/or Grantee may

host a public relations event upon completion of the activity to increase community awareness of the program and the activity.

M. Notices

Notices required by this Agreement shall be in writing and delivered via mail (postage prepaid), personal delivery or sent by electronic mail (email). Any notice delivered or sent as aforesaid shall be effective on the date of delivery or sending. All notices and other written communications under this Agreement shall be addressed to the individuals in the capacities indicated below, unless otherwise modified by subsequent written notice.

Communication and details concerning this Agreement shall be directed to the following contract representatives:

Grantee: Lori Walters, Director
Faith Community Development Corporation
5526 SR 26 E, Lafayette, IN 47905
765-448-1986
lwalters@faithlafayette.org

City: City of Lafayette; ATTN: City Attorney
20 N 6th Street, Lafayette, IN 47901

LHA: Michelle Reynolds, Executive Director
Lafayette Housing Authority
PO Box 6687, Lafayette, IN 47903-6687
mreynolds@lha.lafayette.in.gov

N. Waiver

The Consortium or LHA's failure to act with respect to a breach by the Grantee does not waive its right to act with respect to subsequent or similar breaches. The failure of the Consortium or LHA to exercise or enforce any right or provision shall not constitute a waiver of such right or provision.

IN WITNESS WHEREOF, the City and the Grantee have executed this Agreement effective as of the date first above written.

FAITH COMMUNITY DEVELOPMENT CORPORATION

By: Lori Walters _____ By: _____

Lori Walters

Title: Director _____ Title: _____

Date: 4/14/2020 _____ Date: _____

CITY OF LAFAYETTE, LEAD AGENCY
FOR LAFAYETTE HOUSING CONSORTIUM,
BY ITS BOARD OF PUBLIC WORKS AND SAFETY

Approved by the Board of Public Works and Safety on the ____ day of _____, 2020.

By: _____ By: _____
Gary Henriott, President Norm Childress, Member

By: _____ By: _____
Amy Moulton, Member Cindy Murray, Member

By: _____
Ronald Shriner, Member

ATTEST:

By: _____
Mindy Miller, Deputy Clerk

Date: _____

EXHIBIT A

PROGRAM DESCRIPTION AND TASKS
PROGRAM BUDGET
PROGRAM SCHEDULE
1025 North 8th Street

PROGRAM DESCRIPTION AND TASKS

The program will make affordable homes available to low/moderate income persons. Faith Community Development Corporation will acquire, renovate, market, and document eligibility of homebuyers.

PROJECTED BUDGET

	HOME	FAITH	TOTAL
Property Acquisition	2,000	97,899	99,899
Other Predevelopment	3,250		3,250
Property Rehab	25,000	8,351	33,351
Rehab Contingency	2,500		2,500
Holding Costs / Overhead	3,250		3,250
Other	1,000		1,000
Developer Fees	10,000		10,000
Selling Costs	7,000	750	7,750
Direct Homebuyer Assistance	6,000		6,000
Total Development Cost	60,000	107,000	167,000

PROGRAM SCHEDULE

The schedule reflects an ongoing program of acquisition, renovation, and sale. The property will be marketed and sold as finished.

Projected Schedule:	On or before:
Finalize Scope	04/15/2020
Homebuyer Marketing Underway	ongoing
Award Contracts	5/30/2020
Renovation Started	5/30/2020
Renovation Completed	12/1/2020
Homebuyer Sale Closed	12/15/2020
Paperwork completed and activity closed	12/31/2020

EXHIBIT B
DOCUMENTATION REQUIREMENTS

CONTRACTOR PERFORMANCE INFORMATION

Grantee must search the www.sam.gov website to determine that potential contractors are not excluded from receiving federal contracts or subcontracts ("debarred") prior to entering into an agreement with the contractor. Proof that the contractor is not debarred must be included with claims with the initial invoices for all contractors.

INCOME VERIFICATION FOR HOMEBUYERS

The Consortium must pre-approve all homebuyers prior to closing. Grantee must submit the approved income verification to the Consortium prior to closing with the homebuyer.

CLAIM DOCUMENTATION AT SITE ACQUISITION

1. URA Disclosures to Seller with Voluntary, Arm's Length Purchase Offer.
2. Copy of HUD Statement to document initial purchase price.
3. HOME Project Set-up Report.
4. Evidence of HOME required 25% match.
5. Evidence of compliance with Lead-Based Paint regulations.
6. Signed mortgage and promissory note for HOME assistance – if not already submitted.

CLAIM DOCUMENTATION FOR SITE DEVELOPMENT DRAWS

1. Documentation of site development costs
2. Evidence of compliance with Lead-Based Paint regulations.

CLAIM DOCUMENTATION AT UPON SALE OF UNIT TO HOMEBUYER

1. Evidence of Compliance with 203(b) Limits
2. HOME Project Completion Report
3. Copy Executed Promissory Note
4. Copy Executed Mortgage
5. Copy Executed Deed Restrictions if Resale option used
6. Income Verification
7. Copy of HUD Settlement Statement
8. Copy of Truth in Lending Form
9. Signed Resale / Recapture Worksheet
10. Final Invoice for Administrative Expenses or Balance of Rehab Expenses
11. Copy of Lead Evaluation and/or Clearance Report
12. Copy of Lead Based Paint Disclosure
13. Verification of compliance with Lafayette Housing Standards
14. Request for Use of CHDO Proceeds Worksheet

Note: Original, recorded mortgage must be submitted as soon as it is received from the closing title company.

EXHIBIT C
RESALE / RECAPTURE POLICY

It is the policy of the Lafayette Housing Consortium to maintain long term affordable housing through investments of federal funds. In accordance with the HOME regulations, this policy is enforced either by recapturing HOME funds to assist other buyers and/or properties (Recapture Option), or by restricting the sale of HOME-assisted properties to other low-income (household income less than 80% Area Median Income) buyers (Resale Option). The type and amount of HOME subsidy invested in the property determines the option and the minimum length of the affordability period applied to a property. The requirements of each option are specifically described in the legal documents for each loan. At the end of the period of affordability, the HOME subsidy is forgiven and the property is no longer subject to HOME Program restrictions. As a general practice, when both direct and indirect subsidies are invested in a property, the Recapture Option is utilized.

This policy provides an incentive for long term ownership and encourages neighborhood stability by reducing the HOME investment after five years. Over time, the homeowner's equity increases as first mortgage principal payments increase and the HOME investment is reduced. The homeowner's percentage of net proceeds is increased by capital improvements made to the property, thus protecting their investment and providing an incentive to maintain and improve the property.

In the event of a homeowner's default of HOME requirements during the affordability period due to death, life-threatening illness, or other extraordinary circumstance, the Consortium may allow assumption of the affordability requirements by an income-eligible family member on a case-by-case basis.

This policy may be amended from time to time to reflect changes in programs and local market conditions.

Recapture of HOME Funds

The Recapture Option is used when the homebuyer receives a direct subsidy for the purchase of the home, such as down payment or closing cost assistance, or when the unit is purchased at a price below the fair market value. Under this option, the minimum period of affordability is based only on the amount of the direct subsidy.

The homeowner is at liberty to sell to any buyer, at any price the market will bear, but also must repay the direct HOME subsidy received when the unit was originally purchased, which will be reduced on a pro-rata basis beginning year six of the affordability period. Prior to year six, the entire amount of the direct HOME subsidy is due upon closing. In the event the sale proceeds are insufficient to repay the entire HOME subsidy due, the Lafayette Housing Consortium will share the net proceeds with the homeowner.

Net proceeds of a sale are the sales price minus the repayment of any non-HOME loan balance and seller's closing costs. The amount of HOME funds recaptured is determined by the

percentage of Net proceeds proportionally based on the ratio of the HOME assistance to the sum of the homeowner's investment (down payment, loan principal payments and documented capital improvements) plus the HOME assistance as follows:

HOME Assistance / (HOME Assistance + Homeowner Investment)	X	Net Proceeds	=	HOME Recapture Amount

Once the HOME funds are repaid, the property is no longer subject to the HOME Program restrictions and the HOME liens placed on the property will be released.

At time of sale, if the property increases in value, the HOME investment is repaid and used to fund new eligible projects. If the property fails to appreciate by an amount sufficient to repay both the homeowner's investment and the HOME subsidy, the amount to be recaptured is proportionately reduced. If the net proceeds are less than or equal to zero, the amount to be recaptured will be zero and no additional assistance will be provided to the homeowner. The homeowner is encouraged to maintain the property in a manner that will sustain the original fair market value.

In the event of foreclosure, transfer in lieu of foreclosure or assignment of a FHA insured mortgage to HUD, and there are insufficient net proceeds to repay the HOME investment – the affordability period is terminated and the property is no longer be subject to HOME program restrictions.

Resale of Property

The Resale Option is used when only development subsidies such as site acquisition, rehabilitation, or construction financing are provided to the developer and no direct subsidy is provided to the homebuyer and the unit is sold at the fair market value. The Resale Option ensures that the home remains affordable over the entire period of affordability, even in the event of subsequent sales. Under this option the minimum period of affordability is based on the entire amount of HOME funds invested in the property and the affordability is secured with a recorded covenant or deed restriction. The developer (or Consortium, if lien holder) may use purchase options, rights of first refusal or other preemptive rights to purchase the property before foreclosure to preserve affordability.

Unless the Consortium has established a presumption of affordability for the property's neighborhood in accordance with the specialized procedures per the HOME Final Rule at 24 CFR 92.254(a)(5)(i)(B), the homeowner is required to sell the property to an eligible low-income buyer at an affordable price.

The sale must meet three criteria:

1) The new buyer must be low-income and occupy the home as their principal residence for the remainder of the original affordability period.
2) The sales price must be affordable to a reasonable range of low-income homebuyers (PITI not to exceed 30% of gross income).

3) The original buyer must receive a fair return on their investment, which includes down payment, loan principal payments, and documented capital improvements.

   a. Community-wide appreciation of property values will be considered when calculating fair return. The percentage of appreciation over the years the property was owned, as determined by sales price data provided by the Lafayette Regional Association of Realtors, or its successors, will be used to allow the property owner the same appreciation rate as the rest of the community.

The selling price is determined by adding the non-HOME debt balance, seller's closing costs and fair return. If the selling price of the home is not affordable to low-income families, the Consortium may choose to provide additional direct subsidy to the new buyer to meet the affordability requirements. In this case, a new affordability period based on the direct subsidy amount is applied to the property, but the total (original + new) HOME funds invested in the property may not exceed the regulatory limit on HOME assistance per unit. The additional funding must be through an existing homebuyer program and the new buyer must complete an approved homebuyer education course.

Calculation to Determine Fair Return:

The Lafayette Regional Association of Realtors maintains average sales prices within Tippecanoe County. The Consortium maintains a chart of the average sales price for the calendar years since 1995. Homeowner activities prior to 1995 have met the required period of affordability and are not subject to resale restrictions at this time. The appreciation (or depreciation) rate is determined by computing the percent of change from the year of purchase to the year of sale. The homeowner investment is increased or decreased according to the percent of change.

$\frac{\text{Average Sales Price Year of Sale} - \text{Average Sales Price Year of Purchase}}{\text{Average Sales Price Year of Purchase}}$	=	Percent of Change

100	+ (-)	Percent of Change	X	Homeowner Investment (Down Payment, Principal Payments, Capital Improvements)	=	Fair Return

EXHIBIT D
AFFIRMATIVE MARKETING POLICY

Policy Statement

The Consortium of Lafayette has adopted an affirmative marketing goal for CDBG / HOME-assisted residential units to assure that individuals who might not normally apply to own or rent such properties because of their race, color, ethnicity, religion, age, sex, handicap, or familial status, know of the opportunities and feel welcome to apply for ownership or rental opportunities.

Procedures

1. Inform the Public, Potential Owners and/or Renters about Federal Fair Housing Laws and Affirmative Marketing Policies.

The Consortium will require owners, developers, and sponsors of properties that contain CDBG / HOME-assisted housing units (hereinafter referred to as "Grantee") to implement the affirmative marketing goal of the Consortium of Lafayette to assure that individuals who normally might not apply for CDBG / HOME-assisted units because of their race, color, ethnicity, religion, sex, handicap, or familial status: a) know of the availability of such units, b) feel welcome to apply, and c) have the opportunity to own and/or rent the units.

Agencies and Grantees using CDBG / HOME funds for housing acquisition, rehabilitation, or down payment assistance will inform the public and potential owners and/or renters of CDBG / HOME-assisted units by the use of the Equal Housing Opportunity logo or slogan in press releases, solicitations and written communications to all groups, and by posting the Equal Housing Opportunity logo in each project building or rental office.

2. Inform Public, Potential Owners and/or Renters about Available Units.

Legally binding agreements will require the Grantee to market CDBG / HOME-assisted units in an affirmative manner in order to attract renters or owners who might not normally apply to own or rent such properties, regardless of their race, color, ethnicity, religion, sex, handicap, or familial status.

While soliciting owners or renters, the Grantee shall conduct outreach efforts to reach persons least likely to apply for the housing. The solicitations and advertising shall include the Equal Housing Opportunity logo, slogan, or statement. The Fair Housing poster shall be displayed where visible to applicants. Locations or contacts for outreach include, but are not limited to:

Social service agencies
Neighborhood groups and associations
Local media
Community contacts (groups/organizations located within the housing market area)
Newsletters for senior citizens, disability or other special needs groups

Community centers
Places of worship

Marketing Plan Submission

For all housing projects with five (5) or more HOME-assisted units, Grantee must submit a Marketing Plan in writing to the Lafayette Community Development Department for approval within sixty (60) days of the date of the executed contract and before the first draw is released. The Marketing Plan must include the following:

Methods for informing the public, owners and potential tenants about fair housing laws.
Description of what Grantee will do to affirmatively market housing assisted with HOME funds.
Identification of groups in the housing market area who are least likely to apply for the housing because of its location or other factors without special outreach.
Description of what Grantee will do to inform persons not likely to apply for housing without special outreach.

Record Keeping

To document implementation of the Affirmative Marketing Program activities, Grantees will meet the record-keeping requirements of 24 CFR 92.508(a)5(i) and (ii) and 92.351 concerning racial, ethnic, and gender characteristics, and maintain the following records:

Complete demographic characteristics of all applicants.
Grantee's written acknowledgement of fair housing notice and laws.
Record of contact with applicants.
Copies of notices to social service agencies, neighborhood and other groups specified above.
Copies of press releases, media coverage, mailings and other pertinent information.

Assessment and Corrective Action

The Consortium will assess the affirmative marketing efforts for effectiveness using the following steps. If corrective action is necessary, the Consortium will work closely with the Grantee until the issues are resolved.

To determine if good faith efforts have been made, the Consortium will periodically compare the information contained in the records with actions taken to implement the affirmative marketing efforts.
To determine results, the Consortium will examine whether persons from all racial and ethnic groups in the community either were aware of or applied for units that were affirmatively marketed.
The Consortium may periodically perform ownership and/or tenant surveys to determine the source of referrals.
If it is determined that the Grantee has not affirmatively marketed the program, corrective actions may be required. These may include an initial conference to discuss required changes, possible disqualification from future participation in CDBG / HOME programs and/or legal action.

CITY OF
LAFAYETTE

April 14, 2020

Board of Public Works & Safety
City of Lafayette
20 North 6th Street
Lafayette, IN 47901

Dear Board Members:

You have before you Change Order No. 1 with Reith Riley Construction Company, Inc. for the North Street Phase 2 Improvement project. The Change Order encompasses quantity adjustments for the project and also includes street lighting and re-work of Phase 1 landscaping that was requested by the City. This is the final Change Order for the project and is an addition in the amount of $145,790.39, bringing the final cost of the project to $2,115,169.69.
I recommend this Change Order for your approval.

Lafayette Renew is requesting the Board of Works to execute the letter of Final Completion for the North Street Phase 2. The contractor, Reith Riley Construction Company, Inc. has completed all work for this project with Final Completion on April 14, 2020.

Respectfully,

Brad W. Talley
Superintendent
Lafayette Renew

LAFAYETTE RENEW
WATER · ENVIRONMENT · COMMUNITY
1700 Wabash Avenue Lafayette, Indiana 47909 p 765.807.1800

NORTH STREET PHASE 2- 3RD STREET TO 7TH STREET

Item	Description	Unit	Unit Price	ORIGINAL ESTIMATE		FINAL COST		OVERAGES		DEDUCTION	
				QUANTITY	AMOUNT	QUANTITY	AMOUNT	QUANTITY	AMOUNT	QUANTITY	AMOUNT
1	Construction Engineering	LS	$ 25,000.00	1	$ 25,000.00	1.00	$ 25,000.00				
2	Mobilization and Demobilization	LS	$ 109,000.00	1	$ 109,000.00	1.00	$ 109,000.00				
3	Maintenance of Traffic	LS	$ 12,200.00	1	$ 12,200.00	1.00	$ 12,200.00				
4	Barricade, Type III-B	LF	$ 13.00	390	$ 5,070.00	540.00	$ 7,020.00	150.00	$ 1,950.00		
5	Construction Sign, A	EA	$ 145.00	18	$ 2,610.00	22.00	$ 3,190.00	4.00	$ 580.00		
6	Constuction Sign, E	EA	$ 350.00	3	$ 1,050.00	4.00	$ 1,400.00	1.00	$ 350.00		
7	Constuction Sign, F	EA	$ 45.00	4	$ 180.00	5.00	$ 225.00	1.00	$ 45.00		
8	Constuction Sign, H	EA	$ 45.00	14	$ 630.00	9.00	$ 405.00		$ -	5.00	$ 225.00
9	Clearing of Right of Way	LS	$ 11,700.00	1	$ 11,700.00	1.00	$ 11,700.00		$ -		$ -
10	Existing Brick Pavers, Deconstructed, Salvaged, Cleaned, Palletized, Stored at City Facility	SYS	$ 15.00	3996	$ 59,940.00	4008.95	$ 60,134.25	12.95	$ 194.25		$ -
11	Existing Brick Pavers, Deconstructed, Salvaged, Cleaned, Palletized, Reused	SYS	$ 15.00	434	$ 6,510.00	364.59	$ 5,468.85		$ -	69.41	$ 1,041.15
12	Tree Removal	EA	$ 1,750.00	2	$ 3,500.00	4.00	$ 7,000.00	2.00	$ 3,500.00		$ -
13	Tree Stump Removal	EA	$ 300.00	7	$ 2,100.00	9.00	$ 2,700.00	2.00	$ 600.00		$ -
14	Saw Cut, Asphalt	LF	$ 4.00	412	$ 1,648.00	866.00	$ 3,464.00	454.00	$ 1,816.00		$ -
15	Saw Cut, Concrete	LF	$ 4.00	406	$ 1,624.00	442.00	$ 1,768.00	36.00	$ 144.00		$ -
16	Curb Removal	LF	$ 4.00	2680	$ 10,720.00	2536.00	$ 10,144.00		$ -	144.00	$ 576.00
17	Sidewalk Removal	SYS	$ 17.00	2121	$ 36,057.00	2339.14	$ 39,765.38	218.14	$ 3,708.38		$ -
18	Pavement Removal, Concrete	SYS	$ 13.00	214	$ 2,782.00	62.68	$ 814.84		$ -	151.32	$ 1,967.16
19	Pavement Removal, Asphalt	SYS	$ 9.00	1222	$ 10,998.00	1229.96	$ 11,069.64	7.96	$ 71.64		$ -
20	Milling, Asphalt, 1 1/2"	SYS	$ 69.00	129	$ 8,901.00	640.43	$ 44,189.67	511.43	$ 35,288.67		$ -
21	Fire Hydrant Dissassembly and Stockpile	EA	$ 220.00	2	$ 440.00	1.00	$ 220.00		$ -	1.00	$ 220.00
22	Existing Water Service Disconnection and Removal	LF	$ 17.00	41	$ 697.00	149.00	$ 2,533.00	108.00	$ 1,836.00		$ -
23	Existing Water Main Removal, 6"	LF	$ 13.00	112	$ 1,456.00	44.00	$ 572.00		$ -	68.00	$ 884.00
24	Existing Water Valve Removal	EA	$ 100.00	2	$ 200.00	2.00	$ 200.00		$ -		$ -
25	Signs, Removed, Stockpiled, Relocated	EA	$ 325.00	28	$ 9,100.00	0.00	$ -		$ -	28.00	$ 9,100.00
26	Downspout Disconnects	EA	$ 80.00	6	$ 480.00	6.00	$ 480.00		$ -		$ -
27	Storm Sewer Removal, 18"	LF	$ 44.00	19	$ 836.00	0.00	$ -		$ -	19.00	$ 836.00
28	Storm Sewer Removal, 12"	LF	$ 27.00	178	$ 4,806.00	53.00	$ 1,431.00		$ -	125.00	$ 3,375.00
29	Storm Sewer Removal, 10"	LF	$ 27.00	53	$ 1,431.00	0.00	$ -		$ -	53.00	$ 1,431.00
30	Storm Structure Removal	EA	$ 750.00	9	$ 6,750.00	8.00	$ 6,000.00		$ -	1.00	$ 750.00
31	Storm Structure Casting Removal and Salvage	EA	$ 111.00	13	$ 1,443.00	12.00	$ 1,332.00		$ -	1.00	$ 111.00
32	Storm Structure Casting, Adjust to Grade	EA	$ 750.00	4	$ 3,000.00	1.00	$ 750.00		$ -	3.00	$ 2,250.00
33	Unsuitable Soil Undercut, Removal, and Backfill (Undistributed)	CYD	$ 55.00	1000	$ 55,000.00	43.71	$ 2,404.05		$ -	956.29	$ 52,595.95
34	Common Excavation	CYD	$ 40.00	4854	$ 194,160.00	4854.00	$ 194,160.00		$ -		$ -
35	Tree Root Zone Protection Fence	LF	$ 9.00	500	$ 4,500.00	0.00	$ -		$ -	500.00	$ 4,500.00
36	Tree Root Zone Protection Fence (Undistributed)	LF	$ 9.00	500	$ 4,500.00	0.00	$ -		$ -	500.00	$ 4,500.00
37	Utility Structure Casting Removal and Stockpile	EA	$ 200.00	2	$ 400.00	0.00	$ -		$ -	2.00	$ 400.00
40	Bollard Removal	EA	$ 30.00	1	$ 30.00	0.00	$ -		$ -	1.00	$ 30.00
41	Survey Monument Removal	EA	$ 30.00	2	$ 60.00	2.00	$ 60.00		$ -		$ -
42	Water Main, 8", Ductile Iron	LF	$ 100.00	338	$ 33,800.00	365.00	$ 36,500.00	27.00	$ 2,700.00		$ -
43	Water Main, 6", Ductile Iron	LF	$ 222.00	24	$ 5,328.00	32.00	$ 7,104.00	8.00	$ 1,776.00		$ -
44	Gate Valve, 8"	EA	$ 2,300.00	2	$ 4,600.00	2.00	$ 4,600.00		$ -		$ -
45	Fire Hydrant Assembly, With Valve	EA	$ 6,300.00	1	$ 6,300.00	1.00	$ 6,300.00		$ -		$ -
46	Water Service Line, 2"	LF	$ 130.00	65	$ 8,450.00	36.00	$ 4,680.00		$ -	29.00	$ 3,770.00
47	Water Service Tap & Connection	EA	$ 800.00	4	$ 3,200.00	4.00	$ 3,200.00		$ -		$ -
48	Water Main Tap & Connection	EA	$ 2,300.00	3	$ 6,900.00	2.00	$ 4,600.00		$ -	1.00	$ 2,300.00
49	Water Utility Structure Casting, Adjust to Grade	EA	$ 450.00	7	$ 3,150.00	3.00	$ 1,350.00		$ -	4.00	$ 1,800.00
53	Stormwater Quality Management Budget	LS	$ 11,000.00	1	$ 11,000.00	1.00	$ 11,000.00		$ -		$ -
54	Erosion Control	LS	$ 3,000.00	1	$ 3,000.00	1.00	$ 3,000.00		$ -		$ -
55	Structural Backfill, Type 5	CYD	$ 180.00	30	$ 5,400.00	34.50	$ 6,210.00	4.50	$ 810.00		$ -
56	Non-Woven Geotextile Fabric	SYS	$ 1.00	4956	$ 4,956.00	4847.72	$ 4,847.72		$ -	108.28	$ 108.28
57	Compacted Aggregate, No. 53	TON	$ 44.00	52	$ 2,288.00	1452.38	$ 63,904.72	1400.38	$ 61,616.72		$ -
58	Sidewalk, Concrete	SYS	$ 55.00	1381	$ 75,955.00	1630.95	$ 89,702.25	249.95	$ 13,747.25		$ -
59	Curb Ramp, Concrete	SYS	$ 300.00	241	$ 72,300.00	190.54	$ 57,162.00		$ -	50.46	$ 15,138.00
60	Curb, Concrete, Barrier	LF	$ 37.00	3422	$ 126,614.00	3520.90	$ 130,273.30	98.90	$ 3,659.30		$ -
61	Curb Turnout, Concrete	EA	$ 500.00	16	$ 8,000.00	16.00	$ 8,000.00		$ -		$ -
62	PCCP, 8 in.	SYS	$ 135.00	366	$ 49,410.00	401.47	$ 54,198.45	35.47	$ 4,788.45		$ -
63	HMA Surface, Type B, 9.5mm	TON	$ 300.00	60	$ 18,000.00	97.21	$ 29,163.00	37.21	$ 11,163.00		$ -
64	HMA Intermediate, Type B, 12.5mm	TON	$ 225.00	65	$ 14,625.00	0.00	$ -		$ -	65.00	$ 14,625.00
65	HMA Base, Type B, 25.0 mm	TON	$ 110.00	180	$ 19,800.00	214.25	$ 23,567.50	34.25	$ 3,767.50		$ -
66	Asphalt for Tack Coat	TON	$ 100.00	0.18	$ 18.00	0.00	$ -		$ -	0.18	$ 18.00
68	Concrete Ribbon Curb	LF	$ 44.00	275	$ 12,100.00	278.60	$ 12,258.40	3.60	$ 158.40		$ -

NORTH STREET PHASE 2- 3RD STREET TO 7TH STREET

Item	Description	Unit	Unit Price	ORIGINAL ESTIMATE		FINAL COST		OVERAGES		DEDUCTION	
				QUANTITY	AMOUNT	QUANTITY	AMOUNT	QUANTITY	AMOUNT	QUANTITY	AMOUNT
69	Pipe, Type 4, Circular, 6 in., HDPE	LF	$ 14.00	900	$ 12,600.00	842.00	$ 11,788.00		$ -	58.00	$ 812.00
70	Pipe, Type 2, Circular, 6 in., HDPE	LF	$ 45.00	332	$ 14,940.00	284.60	$ 12,807.00		$ -	47.40	$ 2,133.00
71	Pipe, Type 2, Circular, 12 in., HDPE	LF	$ 80.00	202	$ 16,160.00	190.00	$ 15,200.00		$ -	12.00	$ 960.00
72	Nyloplast Storm Structure w/ Domed Casting	EA	$ 2,200.00	8	$ 17,600.00	8.00	$ 17,600.00		$ -		$ -
73	Manhole, C-4	EA	$ 2,300.00	10	$ 23,000.00	8.00	$ 18,400.00		$ -	2.00	$ 4,600.00
74	Manhole, C-4, Doghouse	EA	$ 4,400.00	2	$ 8,800.00	2.00	$ 8,800.00		$ -		$ -
75	Inlet, J-10	EA	$ 2,500.00	1	$ 2,500.00	1.00	$ 2,500.00		$ -		$ -
76	Underdrain Cleanout	EA	$ 900.00	8	$ 7,200.00	8.00	$ 7,200.00		$ -		$ -
77	Downspout Pop-Up	EA	$ 500.00	17	$ 8,500.00	12.00	$ 6,000.00		$ -	5.00	$ 2,500.00
78	Permeable Pavers	SYS	$ 52.00	4592	$ 238,784.00	4989.04	$ 259,430.08	397.04	$ 20,646.08		$ -
79	No. 8 Aggregate, Washed	TON	$ 33.00	1339	$ 44,187.00	1583.65	$ 52,260.45	244.65	$ 8,073.45		$ -
80	No. 5 Aggregate, Washed	TON	$ 28.00	6343	$ 177,604.00	4067.98	$ 113,903.44		$ -	2275.02	$ 63,700.56
81	Salvaged Brick	SYS	$ 270.00	434	$ 117,180.00	364.59	$ 98,439.30		$ -	69.41	$ 18,740.70
82	Electric Conduit, 2"	LF	$ 12.00	722	$ 8,664.00	925.00	$ 11,100.00	203.00	$ 2,436.00		$ -
83	Striping, Paint, 4", Blue	LF	$ 1.15	322	$ 370.30	277.00	$ 318.55		$ -	45.00	$ 51.75
84	Striping, Paint, Handicap Symbol, Blue	EA	$ 85.00	4	$ 340.00	4.00	$ 340.00		$ -		$ -
85	Striping, Thermoplastic, 12" White	LF	$ 4.00	80	$ 320.00	296.00	$ 1,184.00	216.00	$ 864.00		$ -
86	Plant, Deciduous Tree, 2 1/2" Caliper	EA	$ 540.00	9	$ 4,860.00	10.00	$ 5,400.00	1.00	$ 540.00		$ -
87	Plant, Gound Cover, Plugs	EA	$ 3.15	11365	$ 35,799.75	16414.00	$ 51,704.10	5049.00	$ 15,904.35		$ -
88	Plant, Ornamental Grasses & Perennials, 1 Gallon Container	EA	$ 18.25	201	$ 3,668.25	198.00	$ 3,613.50		$ -	3.00	$ 54.75
89	Mulch, Hardwood, Shredded	CYS	$ 95.00	92	$ 8,740.00	100.00	$ 9,500.00	8	$ 760.00		$ -
90	Mulch, Hardwood, Shredded (Undistributed)	CYS	$ 95.00	10	$ 950.00	0.00	$ -		$ -	10.00	$ 950.00
91	Topsoil, Amended Planting Soil, Mixed On-Site	CYS	$ 90.00	194	$ 17,460.00	156.00	$ 14,040.00		$ -	38.00	$ 3,420.00
92	Seeding, Turf Grass (Undistributed)	SYS	$ 10.00	20	$ 200.00	41.34	$ 413.40	21.34	$ 213.40		$ -
93	Mobilization and Demobilization for Seeding	LS	$ 300.00	1	$ 300.00	1.00	$ 300.00		$ -		$ -
94	Topsoil, Imported	CYS	$ 120.00	194	$ 23,280.00	157.00	$ 18,840.00		$ -	37.00	$ 4,440.00
95	Sign, Rain Garden No Mow No Spray	EA	$ 100.00	8	$ 800.00	51.00	$ 5,100.00	43.00	$ 4,300.00		$ -
96	Sign, Reset Stockpiled Existing, No New Post	EA	$ 325.00	9	$ 2,925.00	2.00	$ 650.00		$ -	7.00	$ 2,275.00
97	Sign, Handicap Parking	EA	$ 150.00	3	$ 450.00	2.00	$ 300.00		$ -	1.00	$ 150.00
98	Sign, Private Parking	EA	$ 150.00	2	$ 300.00	7.00	$ 1,050.00	5.00	$ 750.00		$ -
99	Sign, Reset Stockpiled Existing, New Post	EA	$ 325.00	16	$ 5,200.00	25.00	$ 8,125.00	9.00	$ 2,925.00		$ -
100	Construction Sign, B	EA	$ 145.00	18	$ 2,610.00	21.00	$ 3,045.00	3.00	$ 435.00		$ -
101	Constuction Sign, G	EA	$ 350.00	9	$ 3,150.00	5.00	$ 1,750.00		$ -	4.00	$ 1,400.00
102	Constuction Sign, I	EA	$ 45.00	2	$ 90.00	1.00	$ 45.00		$ -	1.00	$ 45.00
103	Constuction Sign, J	EA	$ 45.00	13	$ 585.00	14.00	$ 630.00	1.00	$ 45.00		$ -
104	Constuction Sign, K	EA	$ 45.00	4	$ 180.00	5.00	$ 225.00	1.00	$ 45.00		$ -
105	Constuction Sign, L	EA	$ 45.00	16	$ 720.00	13.00	$ 585.00		$ -	3.00	$ 135.00
106	Constuction Sign, M	EA	$ 45.00	51	$ 2,295.00	62.00	$ 2,790.00	11.00	$ 495.00		$ -
107	Constuction Sign, O	EA	$ 45.00	14	$ 630.00	14.00	$ 630.00		$ -		$ -
108	Constuction Sign, P	EA	$ 45.00	30	$ 1,350.00	0.00	$ -		$ -	30.00	$ 1,350.00
109	Constuction Sign, Q	EA	$ 45.00	35	$ 1,575.00	18.00	$ 810.00		$ -	17.00	$ 765.00
110	Constuction Sign, S	EA	$ 45.00	30	$ 1,350.00	19.00	$ 855.00		$ -	11.00	$ 495.00
111	Constuction Sign, T	EA	$ 45.00	31	$ 1,395.00	38.00	$ 1,710.00	7.00	$ 315.00		$ -
112	Constuction Sign, U	EA	$ 45.00	19	$ 855.00	23.00	$ 1,035.00	4.00	$ 180.00		$ -
113	Constuction Sign, V	EA	$ 45.00	18	$ 810.00	9.00	$ 405.00		$ -	9.00	$ 405.00
114	Tree Removal (Undistributed)	EA	$ 1,750.00	1	$ 1,750.00	1.00	$ 1,750.00		$ -		$ -
115	Non-Woven Geotextile Fabric for Undercuts (Undistributed)	SYS	$ 1.00	10	$ 10.00	0.00	$ -		$ -	10.00	$ 10.00
116	Bollard	EA	$ 800.00	2	$ 1,600.00	2.00	$ 1,600.00		$ -		$ -
118	Fiber Optic Structure Casting, Salvage Casting & Adjust to Grade	EA	$ 700.00	3	$ 2,100.00	1.00	$ 700.00		$ -	2.00	$ 1,400.00
119	Water Service Line, 1"	LF	$ 160.00	37	$ 5,920.00	85.00	$ 13,600.00	48.00	$ 7,680.00		$ -
120	Sanitary Utility Structure Casting, Adjust to Grade	EA	$ 700.00	1	$ 700.00	1.00	$ 700.00		$ -		$ -
121	Pipe, Type 2, Circular, 10 in., HDPE	LF	$ 90.00	23	$ 2,070.00	0.00	$ -		$ -	23.00	$ 2,070.00
122	Temporary Asphalt Repair to Brick Street	SYS	$ 50.00	50	$ 2,500.00	0.00	$ -		$ -	50.00	$ 2,500.00
123	Water Meter Pit	EA	$ 1,550.00	2	$ 3,100.00	4.00	$ 6,200.00	2.00	$ 3,100.00		$ -
124	Fire Hydrant, Adjust to Grade	EA	$ 3,375.00	1	$ 3,375.00	0.00	$ -		$ -	1.00	$ 3,375.00
125	Monument, Type A	EA	$ 1,500.00	2	$ 3,000.00	2.00	$ 3,000.00		$ -		$ -
126	Geogrid	SYS	$ 2.25	1972	$ 4,437.00	4550.73	$ 10,239.14	2578.73	$ 5,802.14		$ -
127	Concrete Encasement (Undistributed)	CYS	$ 145.00	30	$ 4,350.00	0.00	$ -		$ -	30.00	$ 4,350.00
128	Misc. Utility Structure Casting/Lid, Adjust to Grade	EA	$ 500.00	2	$ 1,000.00	1.00	$ 500.00		$ -	1.00	$ 500.00
129	Mulch, Merrimac, Gravel	CYS	$ 440.00	8	$ 3,520.00	7.60	$ 3,344.00		$ -	0.40	$ 176.00
130	Pipe, Type 4, Circular, 24 in., HDPE	LF	$ 44.00	268	$ 11,792.00	268.00	$ 11,792.00		$ -		$ -
131	Sanitary Structure Casting Removal and Salvage	EA	$ 175.00	1	$ 175.00	0.00	$ -		$ -	1.00	$ 175.00

NORTH STREET PHASE 2- 3RD STREET TO 7TH STREET

Item	Description	Unit	Unit Price	ORIGINAL ESTIMATE		FINAL COST		OVERAGES		DEDUCTION	
				QUANTITY	AMOUNT	QUANTITY	AMOUNT	QUANTITY	AMOUNT	QUANTITY	AMOUNT
132	RFC 1 Delay for digging around unmarked gas line	LS	$ 1,072.27			1.00	$ 1,072.27	1.00	$ 1,072.27		$ -
133	RFC 2 Credit for decorative paver edging	LS	$ (8,463.00)			1.00	$ (8,463.00)	1.00		1.00	$ 8,463.00
134	RFC 3 Sleeve and conduit installation	LS	$ 3,678.53			1.00	$ 3,678.53	1.00	$ 3,678.53		
135	RFC 4 Remove existing structure at 3rd & North	LS	$ 849.32			1.00	$ 849.32	1.00	$ 849.32		
136	RFC 5 Install conduit deeper under drives	LS	$ 853.60			1.00	$ 853.60	1.00	$ 853.60		
137	RFC 6 Install 8" schedule 40 pipe for new structrue at NE 3rd	LS	$ 3,238.03			1.00	$ 3,238.03	1.00	$ 3,238.03		
138	RFC 7 Regrade subgrade after tree removal due to tree roots	LS	$ 1,072.27			1.00	$ 1,072.27	1.00	$ 1,072.27		
139	RFC 8 Remove deteriorated asphalt and place stone at 3rd St	LS	$ 674.92			1.00	$ 674.92	1.00	$ 674.92		
140	RFC 9 Change Order 1 STREETR LIGHTING	LS	$ 35,293.10			1.00	$ 35,293.10	1.00	$ 35,293.10		
141	RFC 10 Water meter removal at NE 3rd plus exploratory dig	LS	$ 3,001.45			1.00	$ 3,001.45	1.00	$ 3,001.45		
142	RFC 11 Tie in 10" clay tile plus started installing 8" schedule 40 pipe at NE 3rd	LS	$ 4,295.25			1.00	$ 4,295.25	1.00	$ 4,295.25		
143	RFC 12 Additional clean up at NE corner 3rd	LS	$ 369.10			1.00	$ 369.10	1.00	$ 369.10		
144	RFC 13 Install additional structure at Lyons Drive plus tie in 8" Schedule 40	LS	$ 5,636.65			1.00	$ 5,636.65	1.00	$ 5,636.65		
145	RFC 14 Replace clay duct to protect fiber duct at Trinity Church	LS	$ 1,135.26			1.00	$ 1,135.26	1.00	$ 1,135.26		
146	RFC 15 Install clean out at NE 3rd St	LS	$ 423.75			1.00	$ 423.75	1.00	$ 423.75		
147	RFC 16 Remove curb due to new design elevation	LS	$ 2,889.46			1.00	$ 2,889.46	1.00	$ 2,889.46		
148	RFC 17 Cost to lower ameritrade fiber manhole at Trinity Church alley	LS	$ 7,136.56			1.00	$ 7,136.56	1.00	$ 7,136.56		
149	RFC 18 Install 1" water line past the ROW for Trinity Church	LS	$ 1,850.67			1.00	$ 1,850.67	1.00	$ 1,850.67		
150	RFC 19 Asphalt repair behind new concrete sidewalk/drives	LS	$ 6,794.66			1.00	$ 6,794.66	1.00	$ 6,794.66		
151	RFC 20 Excavation for retired waterline under sidewalk	LS	$ 640.35			1.00	$ 640.35	1.00	$ 640.35		
152	RFC 21 Lower 1" water line	LS	$ 813.11			1.00	$ 813.11	1.00	$ 813.11		
153	RFC 22 Remove 2 Lead water lines	LS	$ 1,009.24			1.00	$ 1,009.24	1.00	$ 1,009.24		
154	RFC 23 Replace sanitary sewer in conflict	LS	$ 715.38			1.00	$ 715.38	1.00	$ 715.38		
155	RFC 24 Remove and store light poles at 7th	LS	$ 835.19			1.00	$ 835.19	1.00	$ 835.19		
156	RFC 25 Replace 2nd clay sewer line	LS	$ 888.77			1.00	$ 888.77	1.00	$ 888.77		
157	RFC 26 Install 1" conduit at Tippecanoe Arts Center	LS	$ 1,365.43			1.00	$ 1,365.43	1.00	$ 1,365.43		
158	RFC 27 Disconnect 2 lead lines at station 21+75	LS	$ 1,735.56			1.00	$ 1,735.56	1.00	$ 1,735.56		
159	RFC 28 Hydrovac to locate gas line for trees	LS	$ 1,376.10			1.00	$ 1,376.10	1.00	$ 1,376.10		
160	RFC 29 Assist with gathering elevations for Spencer lot redesign	LS	$ 147.21			1.00	$ 147.21	1.00	$ 147.21		
161	RFC 30 Sawcut Spencer's lot	LS	$ 204.66			1.00	$ 204.66	1.00	$ 204.66		
162	RFC 31 Spencer's lot removal	LS	$ 4,116.27			1.00	$ 4,116.27	1.00	$ 4,116.27		
163	RFC 32 Layout for redesigned sidewalk at NW 5th	LS	$ 1,081.44			1.00	$ 1,081.44	1.00	$ 1,081.44		
164	RFC 33 Pouring redesigned sidewalk at NW 5th	LS	$ 4,379.99			1.00	$ 4,379.99	1.00	$ 4,379.99		
165	RFC 34 Pouring redesigned sidewalk at NW 5th	LS	$ 3,766.26			1.00	$ 3,766.26	1.00	$ 3,766.26		
166	RFC 35 Placing asphalt in Spencer's lot	LS	$ 12,246.63			1.00	$ 12,246.63	1.00	$ 12,246.63		
167	RFC 36 Excavate stone for 5th street patching of new trench	LS	$ 388.34			1.00	$ 388.34	1.00	$ 388.34		
168	RFC 37 Remove ramp of redesigned First Christian	LS	$ 1,120.15			1.00	$ 1,120.15	1.00	$ 1,120.15		
169	RFC 38 Pour ramp for redesigned First Christian ramp	LS	$ 1,104.82			1.00	$ 1,104.82	1.00	$ 1,104.82		
170	RFC 39 Install Tippecanoe Arts light poles (4)	LS	$ 408.72			1.00	$ 408.72	1.00	$ 408.72		
171	RFC 40 Phase 1 Landscape rework	LS	$ 42,560.00			1.00	$ 42,560.00	1.00	$ 42,560.00		
172	RFC 41.1 Welded handrail at First Christian Church	LS	$ 4,585.67			1.00	$ 4,585.67	1.00	$ 4,585.67		
172	RFC 42 Electrical work at Civic Theatre	LS	$ 1,882.87			1.00	$ 1,882.87	1.00	$ 1,882.87		
173	RFC 43 Trinity Church Drainage	LS	$ 3,326.70			1.00	$ 3,326.70	1.00	$ 3,326.70		
							$ 2,115,169.69		$ 400,743.69		$ 254,953.30

ORIGINAL CONTRACT AMOUNT	$ 1,969,379.30
FINAL CONTRACT AMOUNT	$ 2,115,169.69
OVERAGE AMOUNT	$ 145,790.39

Approved by the Board of Public Works and Safety on the _____day of _____, 2020.

_____
Gary Henriott, President

_____
Cindy Murray, member

_____
Norm Childress, member

_____
Ronald Shriner, member

_____
Amy Moulton, member

ATTEST:

_____
Mindy Miller, Deputy Clerk

Date: _____

CERTIFICATE OF FINAL COMPLETION

PROJECT NAME: North Street Reconstruction – Phase 2

OWNER: City of Lafayette, Indiana

CONTRACTOR: Rieth-Riley Construction Co., Inc.

ENGINEER: V3 Companies, Inc.

The work performed under this contract has been reviewed and found to be complete. The date of Final Completion of the Project and commencement of applicable warranties required by the Contract Documents and pursuant to Section 14.07 of the General Conditions is hereby established as ***April 14, 2020***.

The date of Final Completion, Approval and Acceptance of the Work is the Date when all structures, facilities and all other improvements installed, modified or constructed under the Contract together with all appurtenances are ready to be placed in contiguous satisfactory operation by the Owner in the manner intended.

All of the work under this Contract has been reviewed and found to be complete in accordance with the Contract Documents. The Contractor certifies that the Project has been completed in accordance with the Contract Documents. Signing of this Certificate by the Owner in no way alters the responsibility of the Contractor to have completed all Work in accordance with the Contact Documents or the Engineer's contractual responsibility to Owner.

PROPOSED:

	Cory Downs	04/06/2020
CONTRACTOR	BY	DATE

RECOMMENDED FOR ACCEPTANCE:

David A Marks	David A. Marks, P.E.	04/13/2020
ENGINEER	BY	DATE

RECOMMENDED FOR ACCEPTANCE:

	BRAD W TALLEY	04/13/2020
OWNER	BY	DATE

Based on the foregoing representations of the Contractor and Engineer, the Owner accepts the Work as complete and will assume full possession thereof on ***April 14, 2020***.

Approved by the Board of Public Works and Safety on the _____day of _____, 2020.

_____
Gary Henriott, President

_____
Cindy Murray, member

_____
Norm Childress, member

_____
Ronald Shriner, member

_____
Amy Moulton, member

ATTEST:

_____
Mindy Miller, Deputy Clerk

Date: _____

CITY OF
LAFAYETTE

April 14, 2020

Board of Public Works & Safety
City of Lafayette
20 North 6th Street
Lafayette, IN 47901

Dear Board Members:

You have before you a Contract Amendment 2 with HWC Engineering regarding the Service Area 21 Phase 1 Project. This amendment incorporates additional geotechnical investigation and increased construction progress participation as requested by the City.

HWC Engineering will perform this work for a not-to-exceed increase of $22,500 to Task 4, bringing the total contract amount to $147,500. This contract was reviewed by the City Attorney and I recommend it for your approval.

Respectfully,

Brad W. Talley
Superintendent
Lafayette Renew

LAFAYETTE RENEW
WATER · ENVIRONMENT · COMMUNITY

1700 Wabash Avenue Lafayette, Indiana 47909 p 765.807.1800

HWC ENGINEERING
BMO Plaza
135 North Pennsylvania Street, Suite 2800
Indianapolis, IN 46204
(317) 347-3663
(317) 981-1298 (fax)

CONTRACT AMENDMENT #2

This **CONTRACT AMENDMENT** is recognized as being established the _____ day of _____, 2020, by and between HWC Engineering, Inc., of Indianapolis, Indiana (hereinafter referred to as "HWC") and the Board of Works for the City of Lafayette (hereinafter referred to as the "CLIENT") concerning the existing contract for professional services for Service Area 21 – Phase I project dated April 3, 2018, and modified by Amendment #1 on March 8, 2019, which is hereby amended as follows:

The Project name, location and address:

Service Area 21 – Phase I – Permitting, Bidding and Construction Engineering
City of Lafayette Board of Works

The CLIENT's name and address:

City of Lafayette Board of Works
20th North 6th Street
Lafayette, IN 47901

The Project's designated CLIENT representative and his/her contact information (including title, address, phone number, fax number and email address):

Brad W. Talley
Superintendent
City of Lafayette Renew
1700 Wabash Avenue
Lafayette, IN 47909
765-807-1800
btalley@lafayette.in.gov

The Project's designated HWC representative and his/her contact information (including title, address, phone number, fax number and email address):

Brian E. Pohlar, PE
HWC Engineering
MatchBOX Coworking Studio
17 S. 6th Street, Suite X
Lafayette, IN 47901
765-490-2097 mobile
bpohlar@hwcengineering.com

The applicable HWC Project number: 2018-048-S

The obligation and scope of services of HWC under this amendment shall be as follows:

HWC shall acquire additional geotechnical information at the intersection of Schuyler Ave and CR 200 N to verify subsurface conditions near the Jack & Bore. In addition, HWC has attended and participated in the construction progress meetings which had not been included in the original scope. These items shall become part of the Construction Engineering Scope.

HWC shall be reimbursed as compensation for such professional services described above as follows:

The Construction Engineering Fee (Task IV of the original agreement) shall be increased by $22,500 bringing the revised Hourly Not-to-Exceed total to $62,500.

It is further mutually agreed by the CLIENT and HWC that all other provisions of the original agreement shall remain unchanged.

"CLIENT"	**"HWC"**
City of Lafayette Board of Public Works & Safety	**HWC Engineering**
By:	By:
Printed: Brad W. Talley	Printed: Eric M. Smith, PE
Title: Superintendent, City of Lafayette	Title: Partner/Director Water Resources Group
Date: 4/14/2020	Date: April 8, 2020

CITY OF
LAFAYETTE

April 14, 2020

Board of Public Works & Safety
City of Lafayette
20 North 6th Street
Lafayette, IN 47901

Dear Board Members:

You have before you a Contract Amendment 1 with Wessler Engineering regarding 40 & 8 Lift Station and Force Main Replacement Project. This amendment incorporates right-of-way services that were not included in original contract.

Wessler Engineering will perform this work for a not-to-exceed increase of $29,890, bringing the total contract amount to $107,790. The contract was reviewed by the City Attorney and I recommend it for your approval.

Respectfully,

Brad W. Talley
Superintendent
Lafayette Renew

LAFAYETTE RENEW
WATER · ENVIRONMENT · COMMUNITY

1700 Wabash Avenue Lafayette, Indiana 47909 p 765.807.1800

WESSLER
ENGINEERING

More than a Project™

AMENDMENT NO. 1

TO AGREEMENT

BETWEEN

BOARD OF PUBLIC WORKS AND SAFETY
CITY OF LAFAYETTE, INDIANA

AND

WESSLER ENGINEERING, INC.

FOR

40 & 8 LIFT STATION AND FORCE MAIN REPLACEMENT

THIS AMENDMENT NO. 1 to existing AGREEMENT, entered into by and between Board of Public Works and Safety, 20 N. 6th Street, Lafayette, IN 47901 (hereinafter named OWNER) and Wessler Engineering, Inc., 6219 S. East Street, Indianapolis, IN 46227 (hereinafter named ENGINEER) dated October 8, 2019:

OWNER and ENGINEER hereto mutually covenant and agree as follows:

ARTICLE I
BASIC ENGINEERING SERVICES
SHALL BE AMENDED AS FOLLOWS:

Add the following:

F. Right-of-Way Services

1. ENGINEER shall add RWS South, Inc. as SUBCONSULTANT for services requested by OWNER and as described in the attached Fee Proposal for Right-of-Way Services.

G. Right-of-Way Engineering Services

1. ENGINEER shall provide services including limited field survey, preparation of easement and land acquisition plans, as well as writing legal descriptions for a total of three (3) project parcels as follows:
    - Bauer Family Resources, Inc.
    - Stevens, Robert & Irma Jean
    - Runyan, James & Connie

ARTICLE III
COMPENSATION
SHALL BE AMENDED AS FOLLOWS:

Increase compensation by $29,890.00 for Right-of-Way Services and Right-of-Way Engineering Services as follows:

Right-of-Way Services (RWS South, Inc.)	$16,530.00
Right-of-Way Engineering Services	$13,360.00
Previous Estimated Total Compensation	$77,900.00
Amended Estimated Total Compensation	**$107,790.00**

ARTICLE IV
SCHEDULE
SHALL BE AMENDED AS FOLLOWS:

Replace existing schedule with the following (additional 30 days to cover delays due to permit requirements and results of geotechnical report):

A. Design, Permitting, Right-of-Way, and Right-of-Way Engineering Services

The 30% Design Review submittal and meeting shall occur within 120 calendar days of authorization to proceed, and 90% Design Review Drawings and Specifications and other deliverables to Owner within 150 calendar days of authorization to proceed. The Final Design Documents shall be completed and submitted to Owner within 15 days after receipt of Owner's 90% submittal review comments. Permit applications shall be submitted within 30 days following receipt of Owner's 90% submittal review comments.

All other terms and conditions contained in the Agreement shall remain unchanged and continue in full force and effect.

This Agreement may be executed in counterparts, each of which shall be deemed to be an original, and all such counterparts together shall constitute one and the same Agreement. An electronic, telecopied, or facsimile signature shall be equivalent to and as binding as an original signature.

IN WITNESS WHEREOF, the parties have made and executed this Amendment No. 1 to existing Agreement, this _____ day of _____, 20_____.

ENGINEER
WESSLER ENGINEERING

Brent A. Siebenthal, P.E.
President

Attest:

Joseph K. Bartos, P.E.
Project Manager

OWNER
BOARD OF PUBLIC WORKS & SAFETY
CITY OF LAFAYETTE, INDIANA

Gary Henriott, President

Norm Childress, Member

Amy Moulton, Member

Cindy Murray, Member

Ronald Shriner, Member

ATTEST:

Mindy Miller, Deputy Clerk

Date: _____

ADDRESS FOR GIVING NOTICE:
Wessler Engineering, Inc.
6219 South East Street
Indianapolis, IN 46227

ADDRESS FOR GIVING NOTICE:
Lafayette Renew Facility
1700 Wabash Avenue
Lafayette, IN 47901

JKB/P#03230/Y:\02 PROPOSALS\Lafayette P\P03230 Lafayette 40&8 LS and Force Main Replacement\220619 AMENDMENT NO.1.docx

Attachments: No. 1 – E-Verify Affidavit
No. 2 – Indiana Iran Investment Certification
No. 3 - 2020 Hourly Rate and Reimbursable Expense Schedule
No. 4 – RWS Fee Proposal

ATTACHMENT NO. 1
E-Verify Affidavit

Pursuant to Indiana Code 22-5-1.7-11, the Engineer entering into a contract with the Owner is required to enroll in and verify the work eligibility status of all its newly hired employees through the E-Verify program. The Engineer is not required to verify the work eligibility status of all its newly hired employees through the E-Verify program if the E-Verify program no longer exists.

The undersigned, on behalf of the Engineer, being first duly sworn, deposes and states that the Engineer does not knowingly employ an unauthorized alien. The undersigned further affirms that, prior to entering into its contract with the Owner, the undersigned Engineer will enroll in and agrees to verify the work eligibility status of all its new hired employees through the E-Verify program

(Engineer): Wessler Engineering, Inc.

By (Written Signature): _____

(Printed Name) Brent A. Siebenthal

(Title): President

Important – Notary Signature and Seal Required in the Space Below

STATE OF INDIANA

SS:

COUNTY OF MARION

GALE E. REBENNACK
Morgan County
NOTARY PUBLIC
Comm #675507
NOTARY SEAL
My Commission Expires 11-15-2023
STATE OF INDIANA

Subscribed and sworn to before me this 02nd day of January, 2020.

(Signed) Gale E Rebennack

Gale E. Rebennack

My commission expires November 15, 2023

Residing in Morgan County, State of Indiana

ATTACHMENT NO. 2

INDIANA IRAN INVESTMENT CERTIFICATION

I, Brent A. Siebenthal, the duly authorized representative of Wessler Engineering, Inc., certify under penalty of perjury that Wessler Engineering, Inc. does not engage in investment activities in Iran as defined by I.C. 5-22-16.5.

Wessler Engineering, Inc.

By: _____

Brent A. Siebenthal, P.E.
President

WESSLER ENGINEERING

More than a Project™

ATTACHMENT NO. 3

2020 HOURLY RATE and REIMBURSABLE EXPENSE SCHEDULE

Position	Hourly Rate*
Principal Engineer	$230
Senior Project Manager I/II	$190/$215
Senior Project Engineer I/II	$190/$215
Project Manager I/II	$155/$165
Assistant Project Manager	$130
Project Engineer I/II/III/IV	$120/$130/$155/$165
Engineer	$105
Electrical Senior Project Manager I/II	$195/$220
Electrical Senior Project Engineer I/II	$195/$220
Electrical Project Manager I/II	$160/$170
Electrical Project Engineer I/II/III/IV	$125/$135/$160/$170
Control System Engineer I/II/III/IV	$110/$130/$150/$170
Environmental Services Senior Project Manager I	$150
Environmental Services Project Manager I/II	$130/$140
Environmental Services Assistant Project Manager	$105
Environmental Scientist I/II	$80/$95
CAD Manager I/II	$120/$150
Senior Designer I/II	$115/$130
Designer	$105
GIS Technician	$90
Technician I/II/III/IV	$65/$80/$90/$100
Senior Resident Project Representative I/II	$110/$120
Resident Project Representative I/II/III/IV	$65/$80/$90/$100
Field Services Manager I/II	$120/$130
Registered/Professional Land Surveyor	$160
Survey Manager	$130
Survey Crew Manager I/II	$90/$100
Survey Crew Chief I/II	$85/$95
Project Coordinator	$90
Project Administrator	$60

WESSLER ENGINEERING

More than a Project™

Reimbursable Expenses shall be charged as follows:

Item and Unit		Unit Cost
Mileage (per mile)		At current IRS published rate
Copies:(each) Black & White	8.5"x11" / 11"x17"	$0.12
	24"x36"	$1.00
Color	8.5"x11"/ 11"x17"	$0.20/$0.40
Plots-Bond: (each)	12"x18"/ 24"x36"	$0.50/$1.00
GPS Survey Equipment/Robotic Total Station/Pole Camera		$15.00 per hour
Postage/shipping/freight, Lodging and Per Diems		At Cost
Subcontractor/Subconsultant fees		Cost + 10%
eCommunication Construction Software License through Eastern Engineering (per project)		At Cost

*Expert Witness Services (Court Hearings or Testimony, Depositions, Arbitration or Mediation Hearings) shall be charged at 150% of the Hourly Rate listed in this Schedule.

This Schedule is subject to change.

January 1, 2020

RWS SOUTH, INC.

127 East Michigan Street, Suite 300, Indianapolis, Indiana 46204
Phone 317.781.9723 • Fax 317.781.9727 • www.rwssouth.com

January 27, 2020

Joe Bartos, P.E.
Project Manager
Wessler Engineering, Inc.
6219 South East Street
Indianapolis, Indiana 46227

RE: Fee Proposal for Right-of-Way Services
Agency: City of Lafayette
Project: New 40 & 8 Lift Station
Project #: 1400010-03-11
County: Tippecanoe
Funding: Local Funds

Dear Mr. Bartos:

Pursuant to your request, we are respectfully submitting this proposal to provide right-of-way services for Wessler Engineering, Inc., and the City of Lafayette. During the preparation of this proposal, we reviewed the information provided and considered the scope of work necessary to perform the title research, appraisal, negotiation (buying) services, document recording, and right-of-way services management, for the three (3) project parcels. This proposal does not include fees for transfer document preparation or check processing. The proposed fees for the requested services are presented on an itemized basis on Page 2 of this document.

As part of this proposal, work will begin no later than seven (7) days following notice to proceed and we anticipate that all work will require approximately 120 to 150 days to complete. All work will be performed in accordance with all applicable State regulations by experienced right-of-way professionals who are prequalified for their respective work types by the Indiana Department of Transportation.

We thank you for the opportunity to submit this proposal and are looking forward to working with you on this project. If you have any questions, please don't hesitate to contact myself or Gina Hansen at your convenience.

Sincerely,

RWS South, Inc.

Jeffrey S. Anderson, MAI

ITEMIZED PROPOSAL NEW 40 & 8 LIFT STATION LAFAYETTE, INDIANA										
Parcel	Owner	Title Research	Report Type	Appraisal	Second Appraisal [1]	Transfer Documents	Buying	Recording [2]	Management	Total
1	Bauer Family Resources, Inc.	$500.00	Restricted	$1,830.00	$0.00	$0.00	$1,930.00	$150.00	$600.00	$5,010.00
2	Stevens, Robert & Irma Jean	$500.00	Restricted	$1,830.00	$0.00	$0.00	$1,930.00	$150.00	$600.00	$5,010.00
3	Runyan, James & Connie	$500.00	Restricted	$1,830.00	$0.00	$0.00	$1,930.00	$150.00	$600.00	$5,010.00
SUBTOTAL		$1,500.00		$5,490.00	$0.00	$0.00	$5,790.00	$450.00	$1,800.00	$15,030.00
10% CONTINGENCY FEE (RND)										$1,500.00
TOTAL										$16,530.00

[1] Total compensation is not expected to exceed $25,000, and thus require a second appraisal, for any parcel.
[2] Optional services.

General Assumptions
- Any affected existing utility infrastructure will be relocated as needed by others.
- No private septic system or water well will be affected by the project.
- The function of any existing drainage pipes will be perpetuated as part of the project.
- Variances will not be required for any property characteristic made non-conforming by the project.
- Any affected drive surface or lawn within any easements will be functionally replaced as part of the project.
- Partial mortgage releases will not be required if total compensation is less than $25,000.

General Conditions
- According to IC 36-1-10.5 (Purchase of Land or Structures), a second appraisal is required if total compensation exceeds $25,000.
- Contingency fee for reimbursement of cost-to-cure contractor fees, partial mortgage release fees, etc.

Parcel-Specific Assumptions
None

CITY OF
LAFAYETTE

April 14, 2020

Board of Public Works & Safety
City of Lafayette
20 North 6th Street
Lafayette, IN 47901

Dear Board Members:

You have before you a Contract Amendment 1 with Wessler Engineering regarding Northeast Area Sewer Replacement Project 30% Design. This amendment incorporates additional geotechnical investigation and railroad flagging during the design process.

Wessler Engineering will perform this work for a not-to-exceed increase of $9,500, bringing the total contract amount to $102,750. This contract was reviewed by the City Attorney and I recommend it for your approval.

Respectfully,

Brad W. Talley
Superintendent
Lafayette Renew

LAFAYETTE RENEW
WATER · ENVIRONMENT · COMMUNITY

1700 Wabash Avenue Lafayette, Indiana 47909 p 765.807.1800

WESSLER
ENGINEERING

More than a Project™

AMENDMENT NO. 1

TO AGREEMENT

BETWEEN

BOARD OF PUBLIC WORKS AND SAFETY
CITY OF LAFAYETTE, INDIANA

AND

WESSLER ENGINEERING, INC.

FOR

NORTHEAST AREA SEWER REPLACEMENT PROJECT 30% DESIGN

THIS AMENDMENT NO. 1 to existing AGREEMENT, entered into by and between Board of Public Works and Safety, 20 N. 6th Street, Lafayette, IN 47901 (hereinafter named OWNER) and Wessler Engineering, Inc., 6219 S. East Street, Indianapolis, IN 46227 (hereinafter named ENGINEER) dated October 8, 2019:

OWNER and ENGINEER hereto mutually covenant and agree as follows:

ARTICLE II
SCOPE OF SERVICES – BASIC SERVICES
SHALL BE AMENDED AS FOLLOWS:

D. Geotechnical Subsurface Investigation

1. ENGINEER shall add Patriot Engineering and Environmental, Inc. as SUBCONSULTANT for services requested by OWNER and as described in the attached Proposal for Geotechnical Engineering Investigation.

ARTICLE VI
COMPENSATION
SHALL BE AMENDED AS FOLLOWS:

Increase compensation by $9,950.00 for Norfolk Southern flagging operations fees during Design Survey and Geotechnical Subsurface Investigations Services as follows:

Design Survey (Norfolk Southern flagging operations fees)	$5,000.00
Geotechnical Engineering Investigation	$4,950.00
Previous Estimated Total Compensation	$92,800.00
Amended Estimated Total Compensation	**$102,750.00**

ARTICLE VII
SCHEDULE
SHALL BE AMENDED AS FOLLOWS:

Replace schedule with the following (an additional 60 days are added to the schedule to account for delays in connection to coordination with Norfolk Southern)

Design, Survey, Preliminary Route Options, Draft 30% Submittal	180 days from NTP
Geotechnical Coordination, Final 30% Submittal	60 days from receipt of OWNER draft 30% Submittal review comments

All other terms and conditions contained in the Agreement shall remain unchanged and continue in full force and effect.

This Agreement may be executed in counterparts, each of which shall be deemed to be an original, and all such counterparts together shall constitute one and the same Agreement. An electronic, telecopied, or facsimile signature shall be equivalent to and as binding as an original signature.

IN WITNESS WHEREOF, the parties have made and executed this Amendment No. 1 to existing Agreement, this _____ day of _____, 20_____.

ENGINEER
WESSLER ENGINEERING

Brent A. Siebenthal, P.E.
President

Attest:

Joseph K. Bartos, P.E.
Project Manager

OWNER
BOARD OF PUBLIC WORKS & SAFETY
CITY OF LAFAYETTE, INDIANA

Gary Henriott, President

Norm Childress, Member

Amy Moulton, Member

Cindy Murray, Member

Ronald Shriner, Member

ATTEST:

Mindy Miller, Deputy Clerk

Date: _____

ADDRESS FOR GIVING NOTICE:
Wessler Engineering, Inc.
6219 South East Street
Indianapolis, IN 46227

ADDRESS FOR GIVING NOTICE:
Lafayette Renew Facility
1700 Wabash Avenue
Lafayette, IN 47901

JKB/P#03230/Y:\02 PROPOSALS\Lafayette P\P03215 Lafayette NE Trunk Sewer Design\219719 AMENDMENT NO. 1.docx

Attachments:
No. 1 – E-Verify Affidavit
No. 2 – Indiana Iran Investment Certification
No. 3 – 2020 Hourly Rate and Reimbursable Expense Schedule
No. 4 – Patriot Engineering Proposal

ATTACHMENT NO. 1
E-Verify Affidavit

Pursuant to Indiana Code 22-5-1.7-11, the Engineer entering into a contract with the Owner is required to enroll in and verify the work eligibility status of all its newly hired employees through the E-Verify program. The Engineer is not required to verify the work eligibility status of all its newly hired employees through the E-Verify program if the E-Verify program no longer exists.

The undersigned, on behalf of the Engineer, being first duly sworn, deposes and states that the Engineer does not knowingly employ an unauthorized alien. The undersigned further affirms that, prior to entering into its contract with the Owner, the undersigned Engineer will enroll in and agrees to verify the work eligibility status of all its new hired employees through the E-Verify program

(Engineer): Wessler Engineering, Inc.

By (Written Signature): _____

(Printed Name) Brent A. Siebenthal

(Title): President

Important – Notary Signature and Seal Required in the Space Below

STATE OF INDIANA

SS:

COUNTY OF MARION

GALE E. REBENNACK
Morgan County
NOTARY PUBLIC
Comm #675507
NOTARY SEAL
My Commission Expires 11-15-2023
STATE OF INDIANA

Subscribed and sworn to before me this 02nd day of January, 2020.

(Signed) Gale E Rebennack

Gale E. Rebennack
My commission expires November 15, 2023
Residing in Morgan County, State of Indiana

ATTACHMENT NO. 2

INDIANA IRAN INVESTMENT CERTIFICATION

I, Brent A. Siebenthal, the duly authorized representative of Wessler Engineering, Inc., certify under penalty of perjury that Wessler Engineering, Inc. does not engage in investment activities in Iran as defined by I.C. 5-22-16.5.

Wessler Engineering, Inc.

By: _____

Brent A. Siebenthal, P.E.
President

WESSLER ENGINEERING

More than a Project™

ATTACHMENT NO. 3

2020 HOURLY RATE and REIMBURSABLE EXPENSE SCHEDULE

Position	Hourly Rate*
Principal Engineer	$230
Senior Project Manager I/II	$190/$215
Senior Project Engineer I/II	$190/$215
Project Manager I/II	$155/$165
Assistant Project Manager	$130
Project Engineer I/II/III/IV	$120/$130/$155/$165
Engineer	$105
Electrical Senior Project Manager I/II	$195/$220
Electrical Senior Project Engineer I/II	$195/$220
Electrical Project Manager I/II	$160/$170
Electrical Project Engineer I/II/III/IV	$125/$135/$160/$170
Control System Engineer I/II/III/IV	$110/$130/$150/$170
Environmental Services Senior Project Manager I	$150
Environmental Services Project Manager I/II	$130/$140
Environmental Services Assistant Project Manager	$105
Environmental Scientist I/II	$80/$95
CAD Manager I/II	$120/$150
Senior Designer I/II	$115/$130
Designer	$105
GIS Technician	$90
Technician I/II/III/IV	$65/$80/$90/$100
Senior Resident Project Representative I/II	$110/$120
Resident Project Representative I/II/III/IV	$65/$80/$90/$100
Field Services Manager I/II	$120/$130
Registered/Professional Land Surveyor	$160
Survey Manager	$130
Survey Crew Manager I/II	$90/$100
Survey Crew Chief I/II	$85/$95
Project Coordinator	$90
Project Administrator	$60

WESSLER ENGINEERING

More than a Project™

Reimbursable Expenses shall be charged as follows:

Item and Unit		Unit Cost
Mileage (per mile)		At current IRS published rate
Copies:(each) Black & White	8.5"x11" / 11"x17"	$0.12
	24"x36"	$1.00
Color	8.5"x11"/ 11"x17"	$0.20/$0.40
Plots-Bond: (each)	12"x18"/ 24"x36"	$0.50/$1.00
GPS Survey Equipment/Robotic Total Station/Pole Camera		$15.00 per hour
Postage/shipping/freight, Lodging and Per Diems		At Cost
Subcontractor/Subconsultant fees		Cost + 10%
eCommunication Construction Software License through Eastern Engineering (per project)		At Cost

*Expert Witness Services (Court Hearings or Testimony, Depositions, Arbitration or Mediation Hearings) shall be charged at 150% of the Hourly Rate listed in this Schedule.

This Schedule is subject to change.

January 1, 2020

PATRIOT ENGINEERING
and ENVIRONMENTAL, Inc.

Engineering Value for Project Success

February 3rd, 2020

Mr. Nick Lyons, E.I.
Wessler Engineering, Inc.
6219 South East Street
Indianapolis, Indiana 46227

Re: Proposal for Geotechnical Engineering Investigation
City of Lafayette – Northeast Area Sewer Replacement
Lafayette, Indiana 47904
Patriot Proposal No.: P20-0144-06G

Dear Nick:

Patriot Engineering and Environmental, Inc. (*Patriot*) appreciates the opportunity to submit this proposal to perform a Geotechnical Engineering Investigation for the above referenced project. This proposal has been prepared in accordance with your request for proposal on Tuesday, January 28th, 2020.

Presented in this proposal is an outline of our understanding of the proposed project, our proposed scope of work, and an estimate fee schedule.

If you have any questions regarding this proposal or require any additional information, please do not hesitate to contact our office.

Respectfully submitted,

Patriot Engineering and Environmental, Inc.

Christian C. Pohlar, E.I.
Geotechnical Engineer

Salim M. Ilmudeen, P.E.
Senior Principal Engineer

717 C Farabee Court, Lafayette, Indiana 47905
Ph. 765-447-4477 • Fax 765-447-4045 • Web www.patrioteng.com
INDIANA - Bloomington, Evansville, Fort Wayne, Indianapolis, Lafayette, Terre Haute
KENTUCKY - Louisville, OHIO - Cincinnati, Dayton, TENNESSEE - Nashville

Project Description and Objectives

The proposed project includes the installation of a new 36-inch PVC sanitary sewer and three (3) jack and bore operations to be located along the existing rail line between Underwood Street and the Norfolk Southern easement in Lafayette, Indiana.

The objective of this Geotechnical Engineering Investigation will be to assess the subsurface conditions of the project site and to provide recommendations to aid in the design and construction of the proposed sewer replacement.

Proposed Work Plan

Per the *Client's* request, *Patriot* will drill a total of six (6) soil borings; four (4) soil borings to a depth of 15 feet each, one (1) soil boring to a depth of 20 feet, and one (1) soil boring to a depth of 35 feet; for a total of 115 lineal feet of drilling.

Please note that depending on the railroad owner requirements, we may have to obtain prior approvals, permits, etc. prior to our drilling operations, and stand-by time of our drill crew may be necessary for the soil borings to be performed within the easement.

Patriot will visit the project site prior to drilling to observe and note ground cover, existing structures, pavement, site access, and topographic conditions. During this visit we will locate and mark each soil boring location. If the site conditions require that soil borings be relocated from previous agreed upon locations, the *Client* will be advised.

Patriot will be responsible for "clearing utilities" within the public domain prior to the start of any subsurface exploration. ***The "clearing of utilities" outside of the public domain shall be the responsibility of the property owner or manager and shall coordinate with Patriot. We recommend that the Client hire a private utility locator to clear all soil boring locations of any underground utility lines. Alternatively, Patriot can employ the use of a private utility locator to "clear" the soil boring locations prior to drilling for an additional cost.***

The typical drilling method will utilize hollow-stem augers to advance the soil borings to the required depths. Split-spoon samples and Standard Penetration Test values (commonly referred to as the blow-count or N-value) will be obtained in advance of the augers at 2.5 feet intervals to a depth of 10 feet, and at 5 feet intervals thereafter per ASTM Method D-1586.

Shelby tube samples may be obtained in cohesive soil strata-of-interest. Each soil boring will be monitored for the presence of groundwater during and immediately following the completion of the soil boring.

Upon completion of the soil borings, the boreholes will be backfilled with auger cuttings prior to demobilization for safety considerations. It should be noted that it is standard practice in drilling soil borings to backfill with the auger cuttings from the soil boring. However, sometimes the backfill will settle after the soil borings have been completed, requiring a return trip to backfill again. If this takes place, an additional fee will be charged

for the return trip. As an alternative, for additional fee, the boreholes can be backfilled with bentonite or grout to reduce the potential settlement.

After the fieldwork is completed, we will return the soil boring samples to *Patriot's* soils laboratory to perform the appropriate laboratory testing. The laboratory testing will include visual classification, natural moisture contents, and an estimate of the samples unconfined compressive strengths utilizing a hand penetrometer. All laboratory testing will be performed in accordance with applicable ASTM methods.

Based on the results of the fieldwork and laboratory testing, we will prepare a Geotechnical Engineering Report. The report will present all field, soil boring logs, and laboratory test data. The report will also include recommendations to aid in the design of foundations and other ancillary structures as applicable; as well as providing a discussion regarding any potential construction difficulties due to soil and groundwater conditions.

Estimated Project Cost

Based upon the information provided and as outlined in our *Proposed Work Plan*, along with our experience with similar projects, we estimate the project cost to be the following:

Geotechnical Engineering Investigation & Report:	**$4,200.00**
Private Utility Locator:	**$750.00**
Co-ordination, Permit, Stand-by Time by Drill Crew:	**T&M**

(Actual cost would be difficult to estimate at this time. For estimating purposes, we recommend budgeting some money (roughly $1,500.00). The Client will only be charged for actual time and expenses for this task (if perfomed) per our Fee Schedule. The Client will be provided with backups for our charges.)

Work performed outside of the Scope of Work discussed in this proposal will be performed on a unit rate basis (Refer to attached Fee Schedule) for the actual work performed. Such work will be considered a change in scope.

Scope of Work Limitations

In preparation of this proposal, we have assumed that the site is accessible to a track-mounted drilling rig. If "clearing" or "grading" of the site is required (i.e. trees, brush, crops, etc…), an additional charge will be assessed. We also assume that the Client will make arrangements regarding our field work, such as access to the drilling locations, etc… Additionally, we assume that our field work will be performed during normal work hours (not on weekend or night hours).

If the soil borings reveal inconsistent and/or marginal soil conditions requiring additional soil borings, deeper soil borings, additional samples, or additional laboratory testing, the *Client's* Project Manager will be consulted immediately regarding the possibility of modifying the proposed subsurface investigation program. Such a modification may be considered a change in scope of the Proposed Work Plan, thereby requiring a possible adjustment to the budget of this Geotechnical Engineering Investigation.

The subsurface investigation outlined in this proposal assumes that there are no hazardous materials in the soil or in the groundwater underlying the site. This investigation is not designed to detect or identify such materials. If it becomes apparent during our field investigation that hazardous materials are present, field operations will temporarily cease. The field investigation may be resumed only after the appropriate health and safety issues are addressed and the scope of our investigation is modified to address this change in conditions.

Work Schedule

Patriot will initiate project activates upon receipt of the attached *Proposal Acceptance Agreement*, authorizing us to begin work. The field drilling work should take one (1) to two (2) days to complete. We would expect to issue our engineering report within approximately two (2) to three (3) weeks of completing the fieldwork. However, verbal results can be provided shortly after the fieldwork is completed.

Authorization to Proceed

As our formal authorization to proceed, please complete and sign the *Proposal Acceptance Agreement* form included within this proposal, indicating proper billing instructions, and return an executed copy of this Acceptance Agreement for our files. Also, please note the *Terms and Conditions* included within this proposal, which is an integral part of this proposal. Alternatively, this work may be authorized by a written purchase order or a letter instructing us to proceed, which provides for the *Terms and Conditions* herein.

ATTACHMENTS

Geotechnical Personnel

Select Resumes

Insurance Certificate

Fee Schedule

Terms and Conditions

Proposal Acceptance Agreement

Patriot Engineering and Environmental, Inc.
Geotechnical Division

NAME	EDUCATION	YEARS OF EXPERIENCE
Richard L. Johnson, P.E.	M.S.C.E. Geotechnical Engineering	54
William D. Dubois, P.E.	M.S.C.E. Geotechnical Engineering	51
Ronald W. Spivey, P.E.	M.S.C.E. Geotechnical Engineering	42
Kenneth S. Bosar, P.E.	B.S. Mining Engineering	41
Ralph M. O'Quinn, P.E.	M.S.C.E Geotechnical Engineering	41
James T. Sherer, P.E.	B.S.C.E. Civil Engineering	37
Douglas B. Zabonick, P.E.	B.S. Geological Engineering	37
Timothy N. Tyler, Ph.D., P.E.	Ph.D., C.E. Geotechnical Engineering	33
Timothy C. Govert	B.S. Construction Engineering	32
Salim M. Ilmudeen, P.E.	M.S.C.E. Geotechnical Engineering	26
Jacob J. Vieck, P.E.	B.S.C.E. Geotechnical Engineering	14
Zachary G. Ethington, P.E.	M.S.C.E. Geotechnical Engineering	9
John L. Schwartz III, P.E.	M.E.C.E. Geotechnical Engineering	9
Akshat Saxena, E.I.	M.S.C.E. Geotechnical Engineering	8
Benjamin R. Lauletta, P.E.	B.S.C.E. Geotechnical Engineering	7
Michael J. Hammond, E.I.	M.S.C.E. Geotechnical Engineering	5
Jamie M. Bates, E.I.	B.S.C.E. Geotechnical Engineering	5
Kevin D. Agostino	B.S.C.E. Civil Engineering	4
Christian Cole Pohlar, E.I.	B.S.C.E. Civil Engineering	4
Ian Grafe, E.I	B.S.C.E. Civil Engineering	2
Irfan Syed	M.S.C.E Civil Engineering	2

Professional Resume

Salim M. Ilmudeen, PE
Senior Project Engineer

FIELDS OF EXPERTISE

Geotechnical engineering including shallow and deep foundation design; high rise building foundations; slope failures and slope stability analysis; pavement design; deep excavations, underpinning and earth retention systems; geotechnical instrumentation and in-situ testing.

REGISTRATION & CERTIFICATION

Professional Engineer:
Hawaii, PE-8644;
Indiana – PE10606266

EDUCATION

M.S.C.E., Civil Engineering (Geotechnical and Transportation Engineering),
Texas Tech University, Lubbock, TX - 1992

B.Sc., Civil Engineering, University of Peradeniya, Sri Lanka - 1985

PROFESSIONAL SUMMARY

Mr. Ilmudeen is a Senior Project Engineer with over 20 years of experience in the field of geotechnical engineering. He has performed foundation engineering design and provided geotechnical engineering services for a wide variety of projects. These projects included a new airport terminal complex, power plants, high rise buildings, tunnel, bridge and road construction projects, deep excavations, underpinning, earth retention systems and cut-off walls, landslides, vibration monitoring, etc.

SELECTED PROJECT EXPERIENCE

- Carmel City Center – Phase I, Carmel, Indiana – Geotechnical engineering report review and preparation of supplementary report and design parameters for 3 to 7 story buildings with common basement and a utility tunnel 10 feet below the basement.
- Pedcore Square Buildings 4 & 5, Carmel, Indiana – Dewatering consultations and calculations for 2 buildings with 20-feet deep common basement.
- Rush Memorial Hospital, Rushville, Indiana – Dewatering consultations during construction of a new physician / office building.
- New Terminal Complex for Chicago O'Hare International Airport, Chicago, Illinois – Geotechnical engineering for a multi-level terminal building, a parking structure, airport transit system, elevated highways, bridges, concourse concrete aprons, depressed roadways, retaining walls, utility tunnel and other associated structures.
- Lake Shore East Condominiums, Chicago, Illinois – Geotechnical engineering report and design parameters for a 60-story building with a basement.
- Dept of Transportation 96-inch diameter Concrete Sewer Tunnel, Chicago, Illinois – Geotechnical design calculations, analysis of tunneling options, specifications, and design drawings for tunnel and shafts.
- Minor League Baseball Stadium, Gary, Indiana – Civil drawings and specifications for groundwater cut-off wall design alternatives such as slurry walls and sheet pile walls.
- Samsung S-Project, Seoul, Korea – Geotechnical design parameters for four 22 to 35 story buildings with 6 levels of basement extending to 84 feet below grade.
- Excelon – Calumet 350 MW Peaker Plant, Chicago, Illinois – Geotechnical and geophysical explorations, foundation design parameters, and backfilling and compaction procedures for settlement sensitive areas.

Patriot Engineering and Environmental, Inc.
6150 East 75th Street
Indianapolis, Indiana 46250
317-576-8058

Professional Resume

William D. Dubois, PE
Senior Principal Engineer

FIELDS OF EXPERTISE

Geotechnical engineering; materials engineering; environmental consulting.

REGISTRATION & CERTIFICATION

Professional Engineer: Indiana, 60018167; Kentucky, 21153; Ohio, E-49584; Illinois, 62-30719; Michigan, 47286; Missouri, 026362; Florida,18548 and Texas, 111821

EDUCATION

- M.S.C.E., Geotechnical Engineering, Michigan State University, 1968
- B.S., Civil Engineering, Tri-State University, 1966

PROFESSIONAL SUMMARY

Mr. Dubois was President of Patriot Engineering and Environmental, Inc. for 18 years and now performs as a Senior Principal Engineer. He has 47 years of experience in geotechnical, materials engineering, and environmental consulting.

PROFESSIONAL AFFILIATIONS

- American Society of Civil Engineering
- American Concrete Institute
- American Society of Testing and Materials
- Associated Builders and Constructors
- ASCE - Purdue University continuing education committee
- Indiana Construction Association
- Kiwanis Club
- Economic Club
- Indiana Sports Corporation
- Past Member of Trine University Industrial Advisory Board

SELECTED PROJECT EXPERIENCE

- Managed geotechnical and materials investigations for over 1000 industrial plants -- generating stations; chemical processing; paper mills; heavy and light manufacturing; tank storage complexes; transmission lines.
- Provided Expert Opinion and Testimony services for commercial and residential claims and hearings.
- Geotechnical Engineer for numerous commercial shopping centers; apartment complexes; office complexes.
- Geotechnical Engineer for over 25 high-rise structures throughout the Midwest; office towers; apartment towers; parking garages; hotels; hospitals; elevated water tanks.
- Performed geotechnical engineering for sports arenas, stadiums and schools.
- Developed solutions for special problems -- slope failure evaluations; foundation failures and corrections; asphalt failures and corrections.
- Transportation -- INDOT Projects, Interstate and primary highways; bridges; earth retainage structures.
- Water related structures -- earth dams; levees.
- Pavements -- highways; parking; truck docking' airports; streets.
- Contract Manager for over 100 underground storage tank projects for major transportation companies.
- Contract Manager for Phase I and II property assessments for major investment companies.
- Geotechnical Investigations and QA/QC on landfills.

Patriot Engineering and Environmental, Inc.
6150 East 75th Street
Indianapolis, Indiana 46250
317-576-8058

Professional Resume

Christian C. Pohlar, E.I.
Geotechnical Engineer / Project Manager

FIELDS OF EXPERTISE

Geotechnical Engineering:
Applying principles of soil mechanics and rock mechanics to aid in the design of earthworks and structure foundations, assess risks posed by and evaluate both natural and man-made soil deposits, along with construction monitoring of problematic soils and development of remedial solutions.

Project Manager:
Supervision and performance of construction materials testing and inspection, deep foundation installation and load testing, reinforced concrete inspection, soils testing and asphalt testing and evaluation.

EDUCATION

B.S., Civil Engineering, Rose-Hulman Institute of Technology, 2017

REGISTRATION & CERTIFICATION

- Registered Engineer Intern: Indiana
- OSHA – 10 Hour
- American Concrete Institute – Grade I
- U.S. D.O.T. Hazmat Certification

PROFESSIONAL SUMMARY

Mr. Pohlar is a Geotechnical Engineer with three (3) years of experience in the field of Geotechnical Engineering for the Lafayette Branch office. His experience includes project management and technical direction of geotechnical engineering investigations which include; shallow foundation design, seismic analysis, soil and site improvement methods and techniques, and deep foundation load testing.

Mr. Pohlar is also a Project Manager with three (3) years of experience in the construction materials testing division of Patriot Engineering. His experience includes field density evaluation of soils and asphalt by means of nuclear density testing, proof rolling inspections, concrete testing (i.e. slump, air entrainment, and yield testing), masonry material inspection and testing, and soils laboratory testing including proctors, Atterberg limits, moisture contents, grain size analysis, and asphalt analysis.

SELECTED PROJECT EXPERIENCE

Managed the Geotechnical Engineering Investigation for the following selected projects:

Commercial

- Monon Trailer Manufacturing Facility (Monon, IN)
- Delphi Technologies Morgan Street Factory (Kokomo, IN)
- Vision Business Park (Winchester, IN)

Industrial

- Duke Energy Combined Heat and Power Plant (West Lafayette, IN)
- Tate & Lyle Starch Manufacturing Facility (Lafayette, IN)
- Co-Alliance – Reynolds, IN (Reynolds, IN)
- Tate & Lyle South Plant Cogeneration Facility (Lafayette, IN)

Municipal

- Lafayette Fire Station #5 (Lafayette, IN)
- Winamac WWT Amonia Removal Project (Winamac, IN)
- Randolph County Highway Department Maintenance Facility (Winchester, IN)
- Otterbein Town Hall Community Center (Otterbein, IN)

Education

- Battle Ground Middle School Addition (West Lafayette, IN)
- Harrison High School Science Wing Addition (West Lafayette, IN)
- New Palestine High School (New Palestine, IN)

Utilities

- Cumberland Avenue Sewer Line Installment (West Lafayette, IN)

Airports

- Purdue University Hangar 6 Addition (West Lafayette, IN)

Residential

- Provenance Residential Village (West Lafayette, IN)
- Redwood Twyckenham Site (West Lafayette, IN)
- Camp Tecumseh YMCA Staff Housing Development (Brookston, IN)

Patriot Engineering and Environmental, Inc.
717 C Farabee Ct.
Lafayette, IN 47905
765-447-4477

PATRENG-CL CMCKAY

CERTIFICATE OF LIABILITY INSURANCE

DATE (MM/DD/YYYY) 04/11/2019

THIS CERTIFICATE IS ISSUED AS A MATTER OF INFORMATION ONLY AND CONFERS NO RIGHTS UPON THE CERTIFICATE HOLDER. THIS CERTIFICATE DOES NOT AFFIRMATIVELY OR NEGATIVELY AMEND, EXTEND OR ALTER THE COVERAGE AFFORDED BY THE POLICIES BELOW. THIS CERTIFICATE OF INSURANCE DOES NOT CONSTITUTE A CONTRACT BETWEEN THE ISSUING INSURER(S), AUTHORIZED REPRESENTATIVE OR PRODUCER, AND THE CERTIFICATE HOLDER.

IMPORTANT: If the certificate holder is an ADDITIONAL INSURED, the policy(ies) must have ADDITIONAL INSURED provisions or be endorsed. If SUBROGATION IS WAIVED, subject to the terms and conditions of the policy, certain policies may require an endorsement. A statement on this certificate does not confer rights to the certificate holder in lieu of such endorsement(s).

PRODUCER	CONTACT NAME:	
Gregory & Appel Insurance 1402 N Capitol Suite 400 Indianapolis, IN 46202	PHONE (A/C, No, Ext): (317) 634-7491	FAX (A/C, No): (317) 634-6629
	E-MAIL ADDRESS: corp@gregoryappel.com	
	INSURER(S) AFFORDING COVERAGE	NAIC #
	INSURER A : National Fire Ins Co-Hartford	20478
INSURED	INSURER B : Continental Casualty Company	20443
Patriot Engineering & Environmental Inc. 6150 East 75th Street Indianapolis, IN 46250	INSURER C : Lexington Insurance Co.	19437
	INSURER D :	
	INSURER E :	
	INSURER F :	

COVERAGES **CERTIFICATE NUMBER:** **REVISION NUMBER:**

THIS IS TO CERTIFY THAT THE POLICIES OF INSURANCE LISTED BELOW HAVE BEEN ISSUED TO THE INSURED NAMED ABOVE FOR THE POLICY PERIOD INDICATED. NOTWITHSTANDING ANY REQUIREMENT, TERM OR CONDITION OF ANY CONTRACT OR OTHER DOCUMENT WITH RESPECT TO WHICH THIS CERTIFICATE MAY BE ISSUED OR MAY PERTAIN, THE INSURANCE AFFORDED BY THE POLICIES DESCRIBED HEREIN IS SUBJECT TO ALL THE TERMS, EXCLUSIONS AND CONDITIONS OF SUCH POLICIES. LIMITS SHOWN MAY HAVE BEEN REDUCED BY PAID CLAIMS.

INSR LTR	TYPE OF INSURANCE	ADDL INSD	SUBR WVD	POLICY NUMBER	POLICY EFF (MM/DD/YYYY)	POLICY EXP (MM/DD/YYYY)	LIMITS	
A	X COMMERCIAL GENERAL LIABILITY			6017245158	04/12/2019	04/12/2020	EACH OCCURRENCE	$ 1,000,000
	CLAIMS-MADE X OCCUR						DAMAGE TO RENTED PREMISES (Ea occurrence)	$ 300,000
							MED EXP (Any one person)	$ 15,000
							PERSONAL & ADV INJURY	$ 1,000,000
	GEN'L AGGREGATE LIMIT APPLIES PER:						GENERAL AGGREGATE	$ 2,000,000
	POLICY X PRO-JECT LOC						PRODUCTS - COMP/OP AGG	$ 2,000,000
	OTHER:							$
A	AUTOMOBILE LIABILITY			6017245161	04/12/2019	04/12/2020	COMBINED SINGLE LIMIT (Ea accident)	$ 1,000,000
	X ANY AUTO						BODILY INJURY (Per person)	$
	OWNED AUTOS ONLY / SCHEDULED AUTOS						BODILY INJURY (Per accident)	$
	HIRED AUTOS ONLY / NON-OWNED AUTOS ONLY						PROPERTY DAMAGE (Per accident)	$
								$
B	X UMBRELLA LIAB X OCCUR			6017245189	04/12/2019	04/12/2020	EACH OCCURRENCE	$ 10,000,000
	EXCESS LIAB CLAIMS-MADE						AGGREGATE	$ 10,000,000
	DED X RETENTION $ 10,000							$
B	WORKERS COMPENSATION AND EMPLOYERS' LIABILITY Y / N			WC624377329	04/12/2019	04/12/2020	X PER STATUTE / OTH-ER	
	ANY PROPRIETOR/PARTNER/EXECUTIVE OFFICER/MEMBER EXCLUDED? (Mandatory in NH)	N / A					E.L. EACH ACCIDENT	$ 1,000,000
	If yes, describe under DESCRIPTION OF OPERATIONS below						E.L. DISEASE - EA EMPLOYEE	$ 1,000,000
							E.L. DISEASE - POLICY LIMIT	$ 1,000,000
C	Prof & Pollution			031711066	04/12/2019	04/12/2020	Each Claim/Aggregate	5,000,000

DESCRIPTION OF OPERATIONS / LOCATIONS / VEHICLES (ACORD 101, Additional Remarks Schedule, may be attached if more space is required)

CERTIFICATE HOLDER

Insured's Information Only

CANCELLATION

SHOULD ANY OF THE ABOVE DESCRIBED POLICIES BE CANCELLED BEFORE THE EXPIRATION DATE THEREOF, NOTICE WILL BE DELIVERED IN ACCORDANCE WITH THE POLICY PROVISIONS.

AUTHORIZED REPRESENTATIVE

Cindy McKay

© 1988-2015 ACORD CORPORATION. All rights reserved.

The ACORD name and logo are registered marks of ACORD

PATRIOT ENGINEERING AND ENVIRONMENTAL, INC.
Geotechnical Engineering Services
2020 Fee Schedule

	Unit	Unit Cost
PROFESSIONAL SERVICES		
Expert Witness	Hour	$300.00
Senior Principal Engineer, P.E.	Hour	$200.00
Principal Engineer, P.E.	Hour	$175.00
Senior Project Engineer, P.E.	Hour	$150.00
Project Engineer, P.E.	Hour	$125.00
Senior Engineer/Geologist	Hour	$100.00
Geotechnical Engineer/Geologist	Hour	$90.00
Draftsperson/CAD Technician	Hour	$80.00
Senior Engineering Technician	Hour	$58.00
Word Processor	Hour	$68.00
LABORATORY TESTING		
Water Contents (oven dried)	Each	$5.35
Hand Penetrometer Test	Each	$10.00
Atterberg Limits (LL & PL)	Each	$72.00
Grain Size Distribution	Each	$118.50
Sieve Analysis only	Each	$57.00
Minus #200 Sieve only	Each	$41.50
Hydrometer only	Each	$67.00
Natural Density	Each	$31.00
Organic Content	Each	$36.00
pH Determination	Each	$31.00
Extrude & Log Shelby Tube Samples	Each	$36.00
Standard Proctor	Each	$145.00
Modified Proctor	Each	$165.00
CBR Test	Each / Point	$165.00
Unconfined Compressive Strength	Each	$62.00
Test for pH, organic matter, soluble salts	Each	$118.50
Triaxial Tests (CU - 3 circles)	Each	$975.00
Consolidation Test	Each	$450.00
Permeability Test (Cohesive Soils)	Each	$330.00
DRILLING SERVICES		
Mobilization of drill rig and crew (Local)	Lump Sum	$550.00
*plus $4.30 per mile over 60 miles from a Patriot office		
Minimum Charge for drill rig, crew and equipment	Lump Sum	$1,750.00
Drilling with 3.25" and 4.25" hollow stem augers with standard splitspoon sample intervals		
Under 50 feet depth and under 50 blows per foot	Foot	$10.50
50 to 75 feet depth and under 50 blows per foot	Foot	$12.50
Over 75 feet depth or over 50 blows per foot	Foot	$15.50
Additional splitspoon samples beyond standard intervals	Each	$14.50
ATV Drilling , Add	Foot	$1.75
Mud Drilling, Add	Foot	$6.25
Drilling without splitspoons	Foot	$9.00
Bulk Samples (50 lb. bag)	Each	$64.00
Rock Coring	Foot	$36.00
Equipment, set-up for rock coring	Hole	$67.00
Shelby Tube Samples (3 in. O.D.)	Each	$57.00
Standby Time requested by Client or Hauling Water	Hour	$170.00
Rental of Dozer (to assist drill rig under adverse site conditions)	Cost + 15%	
Asphalt or Concrete Plug of Drill Holes	Hole	$36.00
Per Diem for Drill Crew per person	Per Day	$125.00
Grouting Holes	Foot	$9.00
Concrete Coring Through 6 to 8 inches of Floor Slab	Hole	$278.00
Monitoring Well Installation	Foot	$36.00
Monitoring Well Flush Manhole & Cover	Each	$285.00
GENERAL EXPENSES		
Transportation by Company or Personal Car	Mile	$0.69
Subcontractor Costs / Special Costs (i.e.., film, FedEx, etc.)	Cost + 15%	
Additional Copies of Report (above 3 copies)*plus time	Page	$0.50
Out-of-Town Living Expenses	Cost + 15%	

TERMS AND CONDITIONS

1. **SCOPE OF WORK**
PATRIOT Engineering and Environmental Inc. (PATRIOT) shall perform the services defined in the attached proposal at the fees stated in the proposal or the attached fee schedule. Any estimate of time and materials shall not be considered as a fixed price, but only an estimate (unless otherwise specifically stated in this contract). *PATRIOT* will provide additional services at the listed standard fees. This offer will be valid for ninety (90) days unless otherwise stated. Upon acceptance, this proposal and associated terms and conditions shall become the contract.

2. **RIGHT OF ENTRY**
Client grants to *PATRIOT* the right of entry to the project site by its employees, agents, and subcontractors; to perform services, post signage, and represents that it has obtained the needed permits and licenses for the proposed work. If Client does not own the site, Client warrants and represents to *PATRIOT* that it has the authority and permission of the owner and occupant of the site to grant right of entry to *PATRIOT*.

3. **PAYMENT TERMS**
PATRIOT will submit invoices to the Client throughout the project and a final invoice upon completion of services. There shall be no retainage of fees due and payable to *PATRIOT. Payme*nt is due within fourteen (14) days of invoice receipt, regardless of whether the client has been reimbursed by any other party. Client agrees to pay interest of one and one-half percent (1½%) per month, or the maximum rate allowed by law, on past due accounts. Any attorney's fees, collection fees or other costs incurred in collecting any delinquent amount shall be paid by Client.

4. **STANDARD OF CARE**
The services shall be performed in accordance with generally accepted industry principles and practices, consistent with a level of care and skill ordinarily practiced by reputable members of the profession currently providing similar services under similar circumstances. Except as set forth herein, *PATRIOT* makes no other representation, guarantee, or warranty, express or implied, in fact or by law, whether any merchantability, fitness for any particular purpose or otherwise concerning any of the services which may be furnished by *PATRIOT* to Client. Client agrees to give *PATRIOT* written notice of any breach or default under this section and to give *PATRIOT* a reasonable opportunity to cure such breach or default, without the payment of additional fees to *PATRIOT*, as condition precedent to any claim for damages.

5. **INSURANCE AND GENERAL LIABILITY**
PATRIOT maintains Workers' Compensation and Employers' Liability Insurance in compliance with the laws of the state having jurisdiction over the individual employee. *PATRIOT* has insurance coverage under general liability, property damage, and professional liability, which *PATRIOT* deems to be adequate. Certificates for such policies of insurance shall be provided to Client upon request. *PATRIOT* may provide additional insurance coverage beyond stated limits at the Client's request and expense.

6. **RISK ALLOCATION**
Due to the very limited benefit *PATRIOT* will derive from this project compared to that of other parties involved, including the Client, Client agrees to limit *PATRIOT*'S liability to Client or any other party using or relying on *PATRIOT*'S work with respect to any acts or omissions including, but not limited to, breach of this contract, breach of warranty, negligence, alleged defects in *PATRIOT'S* performance, or other legal theory such that the total aggregate liability of *PATRIOT* to all those named shall not exceed a maximum limit of $25,000 or *PATRIOT'S* project fee for the services rendered on this project, whichever is less.

7. **TERMINATION**
Either party may suspend performance immediately upon becoming aware of a breach of the terms of this contract by the other party and provide notice of its intention to terminate. In the event *PATRIOT* determines there may be a significant risk that *PATRIOT*'S fees may not be paid on a timely basis, *PATRIOT* may suspend performance and/or retain any reports, work products, or other information until Client provides *PATRIOT* with adequate assurances of payment. The filing of a voluntary or involuntary bankruptcy petition, appointment of a receiver, assignment for the benefit of creditors or other similar act of insolvency shall constitute a breach. Termination will become effective seven (7) calendar days after receipt of notice by the breaching party unless the event(s) giving rise to the breach are remedied within the timeframe or the party seeking termination revokes its notice. Either party, without cause, may terminate this contract upon providing ten (10) calendar days written notice to the other party.

8. **ASSIGNS**
This contract may be amended by written instrument, e-mail confirmation, or written confirmation of a verbal agreement, acknowledged or signed by both parties. Client shall not assign this proposal or any reports or information generated as a result of contracted services pursuant to this proposal without written consent of *PATRIOT*.

9. **SAFETY**
PATRIOT'S responsibility for safety on site shall be limited to its own personnel, subcontractors, and any individuals who are directly involved with *PATRIOT*'S work on site. This shall not be construed to relieve the Client or any of its contractors from their responsibilities for maintaining a safe jobsite. Neither the professional activities of *PATRIOT*, nor the presence of *PATRIOT*'S employees and its subcontractors shall be construed to imply that *PATRIOT* has any responsibility for any activities on the site, which are performed by personnel other than *PATRIOT*'S employees or subcontractors.

10. **CONFLICTS**
Should any element of the Terms and Conditions be deemed in conflict with any element of the proposal/contract, unless the proposal/contract clearly voids the conflicting element in the Terms and Conditions, wording of the Terms and Conditions shall govern. Any element of this agreement later

held to violate a law or regulation shall be deemed void, but all remaining provisions shall continue in force. The Terms and Conditions set forth herein shall survive the termination of this contract. No action, legal or otherwise, may be brought against *PATRIOT* arising from its performance of services under this contract, whether for breach of contract, tort, or otherwise, unless *PATRIOT* shall have received within two (2) years after completion of services under this contract a written notice specifying the alleged defects in *PATRIOT*'S performance or other breach.

11. CONSEQUENTIAL DAMAGES

In no event shall either party be liable to the other party for any consequential, incidental, or indirect damages including, though not limited to, loss of income, loss of profits, loss or restriction of use of property, or any other business losses regardless as to whether such damages are caused by breach of contract or warranty, negligent acts or omissions, or other wrongful acts.

12. DELAYS IN WORK

PATRIOT will charge the Client at standard fees for stand-by or non-productive time for delays in *PATRIOT*'S work caused by the Client or Client's contractors unless otherwise specifically provided for in the contract.

13. SAMPLING OR TEST LOCATION(S)

Unless otherwise stated, the fees in this proposal do not include costs associated with surveying of the site for accurate horizontal and vertical locations of tests or samples which, when referenced in *PATRIOT*'S report, are based on information furnished by others and/or estimates made by *PATRIOT*'S personnel and are only considered approximations, unless otherwise stated. *PATRIOT* may deviate a reasonable distance from any test or sampling location as specified by the Client. If, in order to complete a given soil boring to its designated depth, relocating the soil sampling location and associated sampling method is necessitated by encountering impenetrable subsurface objects, all work, including the original work performed, will be charged for at the appropriate rates in the fee schedule.

Client recognizes that project site conditions may vary from those encountered at the locations where the borings, surveys, sampling, monitoring, or explorations are made by PATRIOT and its subcontractors, and that the data interpretations and recommendations of PATRIOT'S and its subcontractors are based solely on the information available to them. PATRIOT will only be responsible for data, interpretations, and recommendations based on information obtained from the locations sampled, monitored, and explored by PATRIOT and its subcontractors, but shall not be responsible for the interpretations by others of the information obtained and reported.

14. DISPUTE RESOLUTION

Any claim or dispute made against *PATRIOT* for inadequate, negligent, or improper performance of services by *PATRIOT* pursuant to this contract must be resolved by negotiation or mediation. Any party to this contract may demand that any such disputes be resolved by negotiation or mediation, unless the parties mutually agree otherwise. The Client and *PATRIOT* further agree to include similar dispute resolution provisions in all agreements with independent contractors and consultants retained for the project and to require all independent contractors and consultants also to include similar dispute resolution provisions in all agreements with subcontractors, subconsultants, suppliers or fabricators so retained, thereby providing for negotiation or mediation as the primary method for dispute resolution between the parties to those agreements.

15. FAILURE TO FOLLOW RECOMMENDATIONS

Client will not hold PATRIOT or its subcontractors liable for any consequential, incidental, or indirect damages or business losses that may occur based on, or which may result from PATRIOT'S or its subcontractors' recommendations that are not followed. Client waives any claim against PATRIOT and agrees to defend, indemnify, and hold *PATRIOT* harmless from any claim, liability for injury, or business loss that results from *PATRIOT*'S recommendations that are not followed.

16. FORCE MAJEURE

Neither Client nor *PATRIOT* shall hold the other responsible for damages or delays in performance caused by events beyond the control of the other party and which could not reasonably have been anticipated or prevented, including but not limited to, acts of God, materially different site conditions, wars, riots, rebellions, sabotage, fires, explosions, accidents, floods, strikes or other conceded acts of workers, lockouts, or changes in laws, regulations, or ordinances. The party intending to invoke force majeure shall provide prompt notice to the other party.

17. RIGHT TO STOP OR DIRECT WORK

Since PATRIOT'S duties and services are limited to the scope of work proposed and contracted with the Client to perform, PATRIOT shall not under any circumstances give a stop-work order or direct work, either for quality, safety or any other reason, unless directed solely to PATRIOT personnel or its subcontractors' personnel. Neither shall PATRIOT be responsible for the possible consequences of not issuing a stop-work order. PATRIOT will only report to Client regarding the quality of the work PATRIOT has performed, or been contracted to observe and monitor.

18. FIELD MONITORING AND CONTROL

PATRIOT shall not, except for its own services and for services it subcontracts, specify project site procedures, manage or supervise project work, implement or be responsible for project site health and safety procedures. *PATRIOT* shall not be responsible for the acts or omissions of other parties on the project site and shall not have control or charge of and not be responsible, without limitation, for project means, methods, techniques, sequences, or procedures. PATRIOT'S project services shall not relieve any other parties from their responsibility for performing work in accordance with applicable plans, specifications, safety requirements, laws, and regulations. *PATRIOT'S* proposed and contracted monitoring and testing services are limited to its proposed and contracted scope of work and does not imply or warrant that *PATRIOT* is responsible for observing all activities and personnel at the project site. If *PATRIOT* is not retained to monitor environmental remediation, mitigation, or abatement activities, Client waives any claim against *PATRIOT* and agrees to indemnify, defend, and hold *PATRIOT* harmless for any claim or liability for injury or business loss resulting from remediation, mitigation, or abatement activities

The words "supervision", "inspection", or "control", if used in connection with PATRIOT's work, are only intended to mean periodic observation or monitoring of the project work as outlined in *PATRIOT'S* proposed and contracted scope of work.

19. RETESTING AND RE-MONITORING

PATRIOT is only obligated to monitor and test in accordance with applicable and agreed upon standards and methods. In the event PATRIOT's monitoring and/or testing discloses deficiencies in the project's work, and which consequently will require corrections, PATRIOT will retest or re-monitor the corrected work as required by the plans and specifications or as directed by the Client; however, all such retesting or re-monitoring shall be additional work and shall be paid for by Client at the agreed upon fees in this contract.

20. SITE WORK

PATRIOT will take reasonable precautions to avoid any damage to the project site from the activities of its personnel, subcontractors, or equipment. Any damage caused by PATRIOT'S negligence will be restored at PATRIOT'S expense; however, unavoidable damage caused in the execution of the project work such as tire rutting, cutting and splicing of fences, removal of potential asbestos containing materials (ACM), drilling through pavements, cutting of brush and trees, coring through pavements, etc., will not be restored unless otherwise stated in the contract.

21. UTILITIES

In the execution of any subsurface exploration, PATRIOT will take reasonable precautions to avoid damage to subterranean structures or utilities of which PATRIOT has received notification; however, it is the Client's responsibility to mark or furnish the locations of all underground, manmade obstructions or utilities. Client shall indemnify, defend, and hold harmless PATRIOT from and against any claims, losses, or damages incurred or asserted against PATRIOT related to Client's failure to mark, protect, inform, or advise PATRIOT of underground structures or utilities, unless stated in our contracted scope of services.

22. SAMPLES

PATRIOT and its subcontractors will retain any soil, rock, water, or material samples obtained in the performance of its contracted scope of work for a period not to exceed thirty (30) days after submitting PATRIOT'S report or findings. Further storage or transfer of samples and materials obtained from the contracted scope of PATRIOT'S work can be made at the Client's expense upon written request.

23. AQUIFER CONTAMINATION

Client waives any claim against PATRIOT, and agrees to hold harmless, defend, and indemnify PATRIOT from any claim, business loss, or liability for injury as a result of cross-contamination caused by subsurface drilling and/or sampling unless due to PATRIOT'S negligence or willful acts.

24. HAZARDOUS SUBSTANCES

Client agrees to advise PATRIOT, prior to beginning project work, of any hazardous substances on or near the project site known to Client. In the event that test samples obtained during our work contain substances hazardous to health, safety, or the environment, these samples remain the property of Client which also shall pay for all costs connected with decontamination of PATRIOT'S or its subcontractors' equipment. Furthermore, any equipment of PATRIOT'S or its subcontractors' contaminated during PATRIOT's services which cannot be reasonable decontaminated shall become the property and responsibility of Client. Such samples and/or equipment will be delivered to Client. Client agrees to pay transportation costs for samples and equipment, and the fair market value of such contaminated equipment. Client waives any claim against PATRIOT and its subcontractors and agrees to defend, indemnify, and hold harmless PATRIOT from any claims, business loss, or liability for injury arising from PATRIOT'S failure to detect the presence of hazardous materials, including ACM, through techniques and methods agreed upon in the proposed and contracted scope of work, unless the failure to detect hazardous materials, including ACM, was due to PATRIOT'S failure to properly execute the proposed and contracted scope of work set forth in this contract.

25. ENVIRONMENTAL PROBLEMS

PATRIOT and its subcontractors' duties and responsibilities are limited to the proposed and contracted scope of work. Any sampling, testing, or monitoring of site conditions or materials related to environmental concerns including hazardous waste, soil, ground water, surface water, ACM, or air pollutants are not part of PATRIOT'S responsibilities and duties unless specifically identified in its proposed and contracted scope of work. If it becomes apparent during project site work that undisclosed hazardous materials may be present, project site work will be terminated unless specified in PATRIOT'S proposed and contracted scope of project work. Project site work will resume only after renegotiation of the contracted scope of services and fees to cover appropriate environment, health, and safety precautions. PATRIOT shall have no responsibility for detecting or dealing with environmental concerns, hazardous waste, soil, ground water, surface water, ACM, or air contamination, should they occur at the project site unless specifically outline in PATRIOT'S proposed and contracted scope of work. Client waives any claim against PATRIOT and agrees to defend, indemnify, and hold harmless PATRIOT from any claim, business loss, or liability for injury that results from the discovery of onsite environmental concerns, hazardous materials, soils, ground water, surface water, ACM, or air contamination.

26. ENVIRONMENTAL INDEMNITY

Client agrees to the maximum extent permitted by law to defend, indemnify, and hold harmless PATRIOT and its subcontractors from and against any and all claims and liabilities in connection with toxic or hazardous substances or constituents unless caused by PATRIOT'S negligence or willful acts, resulting from Client's violation of any federal, state or local statute, regulation or ordinance relating to the handling, storage or disposal of toxic or hazardous substances or constituents; Client's undertaking of or arranging for the handing, removal, treatment, storage, transportation or disposal of toxic or hazardous substances or constituents found or identified at the site; toxic or hazardous substances or constituents introduced at the site by Client or third persons before or after completion of services herein; allegations that PATRIOT or its subcontractors are the handlers generators, operators, treaters or storers, transporters, or disposers under the Resource Conservation and Recovery Act of 1976, Comprehensive Environmental Response, Compensations and Liability Act, or any other similar federal , state or local regulation or law.

PATRIOT or its subcontractors have no role in generating, treating, storing, or disposing of any hazardous materials which may be present at the project site, and which at no time become the property of PATRIOT or its subcontractors, unless specifically identified in the proposed and contracted scope of work. Client shall evaluate and select proper disposal site for treatment or disposal of its hazardous materials (to include test samples collected to determine the characteristics of the samples), shall select the method of

transportation, and shall be solely responsible therefore. Any arrangements for the treatment, storage, transport, or disposal of any hazardous materials that are made at the direction and expense of Client and to be conducted or completed by PATRIOT shall be construed as being made solely and exclusively on Client's behalf for Client's benefit, and Client shall defend, indemnify, and hold harmless PATRIOT from and against any and all claims, damages, business losses, liability of injury, and expenses, including reasonable attorney's fees, which arise out of any release, threatened release, transportation, or disposal of hazardous materials, unless caused by the negligence or willful acts of PATRIOT during the execution of its proposed and contracted scope of work.

27. OWNERSHIP OF DOCUMENTS

Client agrees that all original documents and drawings produced by PATRIOT in accordance with this agreement, except documents, which are required to be filed with public agencies, shall remain the property of PATRIOT. Client agrees to be liable and responsible for the use of unsigned plans, drawings, or other documents not signed by PATRIOT, and waives liability against PATRIOT for their use. Further, client agrees to waive any claim against PATRIOT and to indemnify, defend, and hold harmless PATRIOT from any and all claims arising out of any use, not authorized in writing by PATRIOT, of these documents by third parties not related to this agreement.

28. PUBLIC RESPONSIBILITY

Client shall be responsible for reporting to appropriate governmental and licensing agencies with respect to any legal or regulatory requirements, code violations, or hazardous substances detected on site. If Client disregards PATRIOT'S and its subcontractors' recommendations for reporting or public health and safety, Client waives any claim against PATRIOT and its subcontracts and agrees to defend, indemnify, and hold harmless PATRIOT and its subcontractors from any claim, business loss, liability for injury, or loss arising from disregarding PATRIOT'S or its subcontractors' recommendations of reporting.

29. NON-SOLICITATION

During the term of this Agreement and for (6) six months after any termination of this Agreement, CLIENT will not directly or indirectly solicit, induce, recruit, divert or hire away, encourage, or otherwise endeavor the cause or attempt to cause any employee or consultant of Patriot to terminate their relationship to Patriot.

Revised July 2017

PATRIOT ENGINEERING and ENVIRONMENTAL, Inc.

Engineering Value for Project Success

PROPOSAL ACCEPTANCE AGREEMENT

Project Name: City of Lafayette – Northeast Area Sewer Replacement

Project Location: Lafayette, Indiana 47904

Description of Services: Geotechnical Engineering Investigation

Patriot Proposal: P20-0144-06G Patriot Project No.:

APPROVAL & PAYMENT OF CHARGES - ***(Company or Individual Responsible for Payment of Invoice)***

Firm:

Address:

City: State: Zip Code:

Attention:

Telephone: Fax: Email:

PAYMENT TERMS: **Per Terms & Conditions**. Invoices for completed work will be issued every month for continuous or extended projects unless otherwise agreed.

REFERENCES - *Patriot* retains the right to perform a standard credit review on all new Clients. *Patriot* will proceed with the project immediately after formal credit approval and receipt of the required invoicing information.

Financial (Current bank or other lender)	Supplier (Current account with Client)	Trade (Engineer, Contractor, Other, etc.)
Name:	Name:	Name:
Contact:	Contact:	Contact:
Account No.:	Account No.:	Account No.:
Phone No.:	Phone No.:	Phone No.:

NOTICE: *PATRIOT* reserves the right to withhold all reports until such time we receive a signed Proposal Acceptance Agreement or with other written authorization referencing this AGREEMENT in its entirety. This AGREEMENT together with *PATRIOT*'S Proposal, Unit Fee Schedule, and Terms & Conditions constitute the entire agreement between the Client and *PATRIOT* and supersedes all prior written or oral understandings:

PROPOSAL ACCEPTED BY:

TITLE: DATE ACCEPTED:

CITY OF LAFAYETTE

PURCHASING DEPARTMENT
Memorandum

To: Board of Public Works & Safety

From: Dave Payne, Purchasing Manager

Date: April 16, 2020

Subject: Declaration of Worthless Property

Worthless Property

The Lafayette Sanitation Department is requesting the items listed below be declared as worthless property. These items have been replaced and will be scrapped.

Vehicle	VIN	City #
2004 Lodal Split body Recycling Truck	1L9AZ6AB64K006788	24111
2004 Lodal EVO-T35-C275 Recycling Truck	1L9AZ6AB64K006791	24105

A motion has been made and seconded to declare the aforementioned items as worthless property.

All of which is approved this 21st day of April, 2020 by the Board of Public Works & Safety.

_____
Gary Henriott, President

_____
Cindy Murray, Member

_____
Ron Shriner, Member

_____
Norm Childress, Member

ATTEST:

_____
Amy Moulton, Member

_____
Mindy Miller, 1st Deputy Clerk

Dated: _____, 2020

CITY OF LAFAYETTE

PURCHASING DEPARTMENT
Memorandum

To: Board of Public Works & Safety

From: Dave Payne, Purchasing Manager

Date: April 16, 2020

Subject: Declaration of Worthless Property

Worthless Property

The Lafayette Street Department is requesting the item listed below be declared as worthless property. This item has been replaced and will be scrapped.

Vehicle	VIN	City #
1995 Mauldin Asphalt Roller 4000	40-9504-109	9555

A motion has been made and seconded to declare the aforementioned items as worthless property.

All of which is approved this 21st day of April, 2020 by the Board of Public Works & Safety.

_____
Gary Henriott, President

_____
Cindy Murray, Member

_____
Ron Shriner, Member

_____
Norm Childress, Member

ATTEST:

_____
Amy Moulton, Member

_____
Mindy Miller, 1st Deputy Clerk

Dated: _____, 2020

CITY OF LAFAYETTE

PURCHASING DEPARTMENT
Memorandum

To: Board of Public Works & Safety

From: Dave Payne, Purchasing Manager

Date: April 16, 2020

Subject: Trade-in Authorization

Vehicle Trade-in Authorization

The Lafayette Street Department is requesting the vehicles listed below be authorized for trade-in on an upcoming vehicle purchase.

Vehicle	VIN	City #
2004 GMC C8500 Single Axle Dump Truck	1GDP8C1354F505015	2422
2009 Western 10' MC HD Plow on 2422	09040720669729350	2927P
2008 Ford F750 Packer Heavy Duty Truck	3FRXF75V88V653112	28120

A motion has been made and seconded to authorize the aforementioned item to be traded in as part of an upcoming vehicle purchase.

All of which is approved this 21st day of April, 2020 by the Board of Public Works & Safety.

_____
Gary Henriott, President

_____
Cindy Murray, Member

_____
Ron Shriner, Member

_____
Norm Childress, Member

_____
Amy Moulton, Member

ATTEST:

_____
Mindy Miller, 1st Deputy Clerk

Dated: _____, 2020

ALLOWANCE OF VOUCHERS

I HEREBY CERTIFY THAT EACH OF THE ABOVE LISTED VOUCHERS AND THE INVOICES, OR BILLS ATTACHED THERETO, ARE TRUE AND CORRECT AND I HAVE AUDITED SAME IN ACCORDANCE WITH IC 5-11-10-1.6.

_____, 20 _____. _____

Fiscal Officer

WE HAVE EXAMINED THE VOUCHERS LISTED ON THE FOREGOING ACCOUNTS PAYABLE VOUCHER REGISTER, CONSISTING OF 14 PAGES, AND EXCEPT FOR VOUCHERS NOT ALLOWED AS SHOWN ON THE REGISTER, SUCH VOUCHERS ARE HEREBY ALLOWED IN THE TOTAL AMOUNT OF $721,972.94 DATED THIS DAY OF APRIL 21, 2020. APPROVED BY STATE BOARD OF ACCOUNTS IN 2000 FOR THE CITY OF LAFAYETTE.

_____ _____

_____ _____

_____ _____

_____ _____

Invoices to be Approved 4/21/2020

Manuals/Wires				
Centier Bank Work Comp	$	4,882.36		
Horizon Bank	$	41,141.61		
Horizon Bank	$	63,288.00		
Horizon Bank	$	38,549.72		
Regions Bank	$	136,208.99		
Total Invoices			$ 284,070.68	
Invoices				
Chase Bank	$	260,113.94		
Horizon Bank	$	177,788.32		
Total Invoices			$ 437,902.26	
Grand Total				$ 721,972.94

CITY OF LAFAYETTE

Board List by Voucher

Board: BW042120 4/21/2020

Cash Account / Bank: 101017 - Cash - Centier Workm Comp

Vendor	Vendor Name	Invoice	Type	Due Date	Amount	Comment
7696	JWF SPECIALITY COMPANY	04012020	CRM	4/21/2020	-755.70	WORK COMP 4/1/2020
7696	JWF SPECIALITY COMPANY	04082020	INV	4/21/2020	2,350.51	WORK COMP 4/8/2020
7696	JWF SPECIALITY COMPANY	04152020	INV	4/21/2020	5,468.19	WORK COMP 4/15/2020
7696	JWF SPECIALITY COMPANY	04172020	CRM	4/21/2020	-2,180.64	WORK COMP CREDIT
			Board Total		**4,882.36**	

Printed By: pking

Board List by Voucher

Board: BW032120 3/20/2020

Cash Account / Bank: 101080 - Cash-Horizon Utilities Op

Vendor	Vendor Name	Invoice	Type	Due Date	Amount	Comment
3652	IND DEPT OF REVENUE	UBO SALES TAX 02/20	INV	3/20/2020	41,141.61	UBO SALES TAX FEB 2020
			Board Total		**41,141.61**	

Printed By: pking

2

CITY OF LAFAYETTE

Board List by Voucher

Board: BW041520 4/15/2020

Cash Account / Bank: 101080 - Cash-Horizon Utilities Op

Vendor	Vendor Name	Invoice	Type	Due Date	Amount	Comment
3652	IND DEPT OF REVENUE	1ST QTR 2020	INV	4/15/2020	34,000.00	UTILITY RECIEPT TAX FOR 1ST QTR 2020
3652	IND DEPT OF REVENUE	2019 UTIL REC TAX	INV	4/15/2020	29,288.00	UTILITY RECIEPT TAX FOR UNDER PMT 2019 TAXES
			Board Total		**63,288.00**	

Printed By: pking

3

CITY OF LAFAYETTE

Board List by Voucher

Board: BW042020 4/20/2020

Cash Account / Bank: 101080 - Cash-Horizon Utilities Op

Vendor	Vendor Name	Invoice	Type	Due Date	Amount	Comment
3652	IND DEPT OF REVENUE	UBO SALES TAX 03/20	INV	4/20/2020	38,549.72	UBO SALES TAX MAR 2020
			Board Total		**38,549.72**	

Printed By: pking

4

CITY OF LAFAYETTE

Board List by Voucher

Board: PR042020 4/20/2020

Cash Account / Bank: 101012 - Cash - Regions Pay Gross

Vendor	Vendor Name	Invoice	Type	Due Date	Amount	Comment
3652	IND DEPT OF REVENUE	103428	INV	4/20/2020	62,864.77	Payroll Run X - Warrant 031320
3652	IND DEPT OF REVENUE	104029	INV	4/20/2020	60,846.99	Payroll Run X - Warrant 032720
3652	IND DEPT OF REVENUE	104064	INV	4/20/2020	12,497.23	Payroll Run X - Warrant 033120
			Board Total		**136,208.99**	

Printed By: pking

5

CITY OF LAFAYETTE

Board List by Voucher

Board: BW042120 4/21/2020

Cash Account / Bank: 101001 - Cash - Chase Operating 1201

Vendor	Vendor Name	Invoice	Type	Due Date	Amount	Comment
2350	RAY O'HERRON CO INC	2010605-IN	INV	4/21/2020	593.85	UNIFORM-BISHOP
8681	CINTAS CORPORATION NO 2	4045770005	INV	4/21/2020	197.65	UNIFORMS FLEET
1700	LAFAYETTE WAREHOUSE INC	02QU1558	INV	4/21/2020	12.34	AUTO PARTS STOCK
1700	LAFAYETTE WAREHOUSE INC	02QU0513	INV	4/21/2020	3.49	AUTO PARTS
1700	LAFAYETTE WAREHOUSE INC	02QU0817	CRM	4/21/2020	-3.49	CREDIT
2770	ROWE TRUCK EQUIPMENT INC	285353	INV	4/21/2020	372.44	AUTO PARTS STOCK
1700	LAFAYETTE WAREHOUSE INC	02QU1574	INV	4/21/2020	217.18	AUTO PARTS STOCK
10674	RPM MACHINERY LLC	P21793	INV	4/21/2020	135.25	AUTO PARTS 1256
1700	LAFAYETTE WAREHOUSE INC	02QU1571	INV	4/21/2020	71.33	AUTO PARTS STOCK
10674	RPM MACHINERY LLC	P21809	INV	4/21/2020	277.00	AUTO PARTS 1256
1700	LAFAYETTE WAREHOUSE INC	02QU2280	INV	4/21/2020	16.74	AUTO PARTS 11104
1700	LAFAYETTE WAREHOUSE INC	02QU2270	INV	4/21/2020	28.55	AUTO PARTS 710
1700	LAFAYETTE WAREHOUSE INC	02QU2122	INV	4/21/2020	258.84	AUTO PARTS 11104
1780	LAFAYETTE HARDWARE INC	3149087	INV	4/21/2020	4.00	AUTO PARTS STOCK
10096	POMP'S TIRE SERVICE INC	910107374	INV	4/21/2020	65.00	REPAIR TIRE 1644
10096	POMP'S TIRE SERVICE INC	910107352	INV	4/21/2020	47.00	REPAIR TIRE FD7
1700	LAFAYETTE WAREHOUSE INC	02QU3001	INV	4/21/2020	23.44	AUTO PARTS STOCK
7977	R.N.O.W. INC	2020-57578	INV	4/21/2020	562.59	AUTO PARTS STOCK
3446	WIERS INTERNATIONAL TRUCKS	20P42929	INV	4/21/2020	192.65	AUTO PARTS 2687
7977	R.N.O.W. INC	2020-57580	INV	4/21/2020	123.88	AUTO PARTS STOCK
1509	JIM'S GARAGE INC	516572	INV	4/21/2020	30.00	TOWING 17-15

Printed By: pking

10

CITY OF LAFAYETTE

Board List by Voucher

Board: BW042120 4/21/2020

Cash Account / Bank: 101001 - Cash - Chase Operating 1201

9336	ADVANCE REPAIR & MACHINING INC	I-39470	INV	4/21/2020	60.00	AUTO PARTS 15143
1342	HOLTZ INDUSTRIES INC	558914	INV	4/21/2020	345.00	AUTO PARTS STOCK
1342	HOLTZ INDUSTRIES INC	559019	INV	4/21/2020	89.00	AUTO PARTS 2686
1700	LAFAYETTE WAREHOUSE INC	02QU3637	INV	4/21/2020	159.53	AUTO PARTS
1700	LAFAYETTE WAREHOUSE INC	02QU4219	CRM	4/21/2020	-159.53	CREDIT
1700	LAFAYETTE WAREHOUSE INC	02QU4206	INV	4/21/2020	17.30	AUTO PARTS 2500
10096	POMP'S TIRE SERVICE INC	910107425	INV	4/21/2020	1,010.61	TIRES STOCK
9336	ADVANCE REPAIR & MACHINING INC	I-39445	INV	4/21/2020	9.47	AUTO PARTS 15143
1700	LAFAYETTE WAREHOUSE INC	02QU3636	INV	4/21/2020	1.89	AUTO PARTS 11604
1700	LAFAYETTE WAREHOUSE INC	02QU3750	INV	4/21/2020	33.84	AUTO PARTS 11104
1700	LAFAYETTE WAREHOUSE INC	02QU3008	INV	4/21/2020	124.20	AUTO PARTS STOCK
790	DEFOUW CHEVROLET INC	5023163	INV	4/21/2020	40.70	AUTO PARTS 11104
16289	TTG EQUIPMENT LLC	9145196	INV	4/21/2020	251.75	AUTO PARTS 1047
16289	TTG EQUIPMENT LLC	9145244	INV	4/21/2020	61.00	AUTO PARTS 1047
1509	JIM'S GARAGE INC	514181	INV	4/21/2020	100.00	TOWING FD13
190	APPLIED INDUSTRIAL TECHNOLOGIES INC	7018531238	INV	4/21/2020	174.26	AUTO PARTS STOCK
1700	LAFAYETTE WAREHOUSE INC	02QU2982	INV	4/21/2020	154.26	AUTO PARTS 11104
1700	LAFAYETTE WAREHOUSE INC	02QU2983	INV	4/21/2020	154.26	AUTO PARTS 11104
1700	LAFAYETTE WAREHOUSE INC	02QU4686	CRM	4/21/2020	-187.50	CREDIT
1700	LAFAYETTE WAREHOUSE INC	02QU4669	INV	4/21/2020	1.89	AUTO PARTS
1700	LAFAYETTE WAREHOUSE INC	02QU4758	CRM	4/21/2020	-1.89	CREDIT

7

CITY OF LAFAYETTE

Board List by Voucher

Board: BW042120 4/21/2020

Cash Account / Bank: 101001 - Cash - Chase Operating 1201

1700	LAFAYETTE WAREHOUSE INC	02QU4869	INV	4/21/2020	35.96	AUTO PARTS 1256
1700	LAFAYETTE WAREHOUSE INC	02QU4756	CRM	4/21/2020	-1.89	CREDIT
1700	LAFAYETTE WAREHOUSE INC	02QU4974	INV	4/21/2020	5.59	AUTO PARTS 371
2770	ROWE TRUCK EQUIPMENT INC	285586	INV	4/21/2020	213.01	AUTO PARTS 346P
10096	POMP'S TIRE SERVICE INC	910107490	INV	4/21/2020	1,159.70	TIRES STOCK & 3000
10096	POMP'S TIRE SERVICE INC	910107489	INV	4/21/2020	757.50	TIRES STOCK
790	DEFOUW CHEVROLET INC	5023199	INV	4/21/2020	11.78	AUTO PARTS 11104
1700	LAFAYETTE WAREHOUSE INC	02QU4281	INV	4/21/2020	504.24	AUTO PARTS STOCK
10096	POMP'S TIRE SERVICE INC	910107495	INV	4/21/2020	7.50	TIRE DISPOSAL 2500
7080	NEWTON OIL COMPANY INC	087725	INV	4/21/2020	761.75	FLUIDS FOR STOCK
2770	ROWE TRUCK EQUIPMENT INC	285600	INV	4/21/2020	69.56	AUTO PARTS STOCK
1700	LAFAYETTE WAREHOUSE INC	02QU5478	INV	4/21/2020	28.98	AUTO PARTS STOCK
1509	JIM'S GARAGE INC	519307	INV	4/21/2020	30.00	FLAT TIRE SERVICE 17-17
12039	D&D NAPA INC	727357	INV	4/21/2020	25.99	AUTO PARTS 15143
9336	ADVANCE REPAIR & MACHINING INC	I-39491	INV	4/21/2020	129.73	AUTO PARTS 15143
9336	ADVANCE REPAIR & MACHINING INC	I-39450	INV	4/21/2020	109.73	AUTO PARTS 15143
9336	ADVANCE REPAIR & MACHINING INC	I-39444	INV	4/21/2020	906.80	AUTO PARTS 15143
7080	NEWTON OIL COMPANY INC	087755	INV	4/21/2020	8,179.68	FUEL
8681	CINTAS CORPORATION NO 2	4045769317	INV	4/21/2020	173.62	UNIFORMS/SUPPLIES SANITATION
8681	CINTAS CORPORATION NO 2	4045769697	INV	4/21/2020	296.86	UNIFORMS/SUPPLIES STREET
480	CDK REFRIGERATION	20APRIL402	INV	4/21/2020	55.00	ICE MACHINE RENT
8681	CINTAS CORPORATION NO 2	4046431777	INV	4/21/2020	35.00	RUGS FOR TC

CITY OF LAFAYETTE

Board List by Voucher

Board: BW042120 4/21/2020

Cash Account / Bank: 101001 - Cash - Chase Operating 1201

5268	DANN C KEISER	1901 I 2	INV	4/21/2020	1,612.50	ARCHITECTURAL SVCS 07/19-12/19
8720	CARDINAL COPIER SOLUTIONS	AR27748	INV	4/21/2020	224.88	ENG PRINTER/COPIER AGREEMENT
790	DEFOUW CHEVROLET INC	8007103	INV	4/21/2020	9,444.79	BODY REPAIR 17-16
10674	RPM MACHINERY LLC	W06002	INV	4/21/2020	716.47	FIX ENGINE 31152
190	APPLIED INDUSTRIAL TECHNOLOGIES INC	7018571507	INV	4/21/2020	23.88	AUTO PARTS 1256
7026	VERIZON WIRELESS-MUNCIPAL	9850982600	INV	4/21/2020	300.14	WIRELESS CHARGES FOR FIRE
5442	CDW GOVERNMENT	XKC6642	INV	4/21/2020	663.96	ZAGG RUGGED CASE FOR IPAD (6)
8643	STELLO PRODUCTS INC	30318	INV	4/21/2020	501.75	RAILROAD CROSSING SIGNS
1780	LAFAYETTE HARDWARE INC	3149317	INV	4/21/2020	5.63	NUTS AND BOLTS FOR OVERHEAD SIGNAGE
2700	RELIABLE EXTERMINATORS INC	195838	INV	4/21/2020	26.00	FEB PEST CTRL - STATION 6
2700	RELIABLE EXTERMINATORS INC	194549	INV	4/21/2020	150.00	QUARTERLY BED BUG INSP - STATION 5
2700	RELIABLE EXTERMINATORS INC	195641	INV	4/21/2020	26.00	MARCH PEST CTRL - STATION 1
14351	UBO DEPOSIT REFUNDS	104639	INV	4/21/2020	337.50	TEMP CO REFUND APP 19483
14351	UBO DEPOSIT REFUNDS	104640	INV	4/21/2020	337.50	TEMP CO REFUND APP 19485
14351	UBO DEPOSIT REFUNDS	104641	INV	4/21/2020	337.50	TEMP CO REFUND APP 19505
14351	UBO DEPOSIT REFUNDS	104642	INV	4/21/2020	337.50	TEMP CO REFUND APP 19506
13462	DARIN W WOODS	245886470	INV	4/21/2020	35.00	REIMBURSE FOR CDL RENEWAL
2700	RELIABLE EXTERMINATORS INC	196310	INV	4/21/2020	26.00	MARCH PEST CTRL - STATION 7
2700	RELIABLE EXTERMINATORS INC	194577	INV	4/21/2020	150.00	QUARTERLY BED BED INSPECTION - #7
2700	RELIABLE EXTERMINATORS INC	197171	INV	4/21/2020	26.00	APRIL PEST CTRL - STATION 7
2700	RELIABLE EXTERMINATORS INC	195259	INV	4/21/2020	120.00	TERMITE RENEWAL INSPECTION - #7

9

CITY OF LAFAYETTE

Board List by Voucher

Board: BW042120 4/21/2020

Cash Account / Bank: 101001 - Cash - Chase Operating 1201

7981	NEW AQUA LLC	PSI-4023725	INV	4/21/2020	11.95	COM DEV 5 GAL WATER
16447	BLACK HORSE ENTERPRISES LLC	387	INV	4/21/2020	181.26	CITY OF LAFAYETTE HR ENVELOPES
7794	ASPHALT MATERIALS INC	8013219723	INV	4/21/2020	394.32	AE-90
7794	ASPHALT MATERIALS INC	8013219646	INV	4/21/2020	368.28	AE-90
2240	MULHAUPT'S INC	726766	INV	4/21/2020	836.00	LABOR TO REPAIR OVERHEAD DOOR AT TRAINING CENTER
12642	MOVE OVER OUTFITTERS	4936	INV	4/21/2020	2,590.00	AMERICAN ALUMINUM VAULT SHIPPED AND INSTALLED 17-2
10873	ADVANTAGE IX LLC	18597	INV	4/21/2020	25.00	CLEANING OF POLICE VEHICLE 18-13
10873	ADVANTAGE IX LLC	18598	INV	4/21/2020	25.00	CLEANING OF POLICE VEHICLE 17-20
1453	STATE OF INDIANA	2020-425	INV	4/21/2020	200.00	PRE-BASIC COURSE (4 OFFICERS)
12642	MOVE OVER OUTFITTERS	5357	INV	4/21/2020	40.00	HOURLY INSTALLATION & LABOR: SIM CARD 17-15
2350	RAY O'HERRON CO INC	2017791-IN	INV	4/21/2020	142.08	BADGES (14 AND 476-490)
12179	PETSMART INC 508	1398050810103 302020	INV	4/21/2020	54.99	DOG FOOD-LEROUX
12179	PETSMART INC 508	0499050810103 242020	INV	4/21/2020	113.98	DOG FOOD-SCHUTTER
15603	TRANSUNION RISK AND ALTERNATIVE	244301-033120	INV	4/21/2020	175.90	ONLINE SEARCH TOOL
7026	VERIZON WIRELESS-MUNCIPAL	9851186979	INV	4/21/2020	3,340.64	LPD MONTHLY PHONE BILL
7026	VERIZON WIRELESS-MUNCIPAL	9851160783	INV	4/21/2020	5,947.68	LPD MONTHLY PHONE BILL
3203	TIPPECANOE COUNTY COUNCIL ON AGING INC	27	INV	4/21/2020	6,438.00	#1336C SENIOR REPAIR SVCS MARCH 2020
3203	TIPPECANOE COUNTY COUNCIL ON AGING INC	28	INV	4/21/2020	3,000.00	#1333C MEALS ON WHEELS EXP JAN-MAR 2020
5929	WABASH CENTER INC	143999	INV	4/21/2020	168,750.00	#1338H - CONSTRUCTION EXP 53 W 250 S

CITY OF LAFAYETTE

Board List by Voucher

Board: BW042120 4/21/2020

Cash Account / Bank: 101001 - Cash - Chase Operating 1201

9160	BUTLER, FAIRMAN & SEUFERT INC	88648	INV	4/21/2020	5,410.00	36TH ST ROADWAY IMPROVEMENTS
8230	CITY OF LAFAYETTE-WORKMANS COM	WC 202004	INV	4/21/2020	27,500.00	WORK COMP APRIL 2020
			Board Total		**260,113.94**	

Printed By: pking

CITY OF LAFAYETTE

Board List by Voucher

Board: BW042120 4/21/2020

Cash Account / Bank: 101080 - Cash-Horizon Utilities Op

Vendor	Vendor Name	Invoice	Type	Due Date	Amount	Comment
8681	CINTAS CORPORATION NO 2	4046436655	INV	4/21/2020	65.54	UNIFORMS - RENEW
8681	CINTAS CORPORATION NO 2	4046436804	INV	4/21/2020	280.87	UNIFORMS - RENEW
150	B L ANDERSON CO INC	P-9470	INV	4/21/2020	747.72	TUBING ELEMENTS FOR CHEMICAL FEED
150	B L ANDERSON CO INC	P-9469	INV	4/21/2020	281.52	GASKETS TO REPAIR CHEMICAL TANKS
9244	BREHOB CORPORATION	758332	INV	4/21/2020	4,650.45	REPAIR HOISTS TAG 1 AND TAG 27
1647	KIRBY RISK CORPORATION	S110902818.001	INV	4/21/2020	501.09	WIRE FOR RAS PUMP INSTALLATION
16613	PVS TECHNOLOGIES INC	268332	INV	4/21/2020	4,979.56	FERRIC FOR TREATMENT
5354	OUTDOOR HOME SERVICES HOLDINGS LLC	117112210	INV	4/21/2020	124.29	LAWN TREATMENT ACROSS FROM 117 S 2ND STREET
8720	CARDINAL COPIER SOLUTIONS	AR28313	INV	4/21/2020	979.77	PER COPY MAINTENANCE AGREEMENT RENEW
890	EVERETT J PRESCOTT INC	5678653	INV	4/21/2020	220.00	TEES FOR SEWER REPAIR
890	EVERETT J PRESCOTT INC	5678668	INV	4/21/2020	55.00	SDR 35 GASKETED TEE
285	BAKER SPECIALTY & SUPPLY COMPANY INC	S1812191.001	INV	4/21/2020	300.20	SEWER LOCATE MARKING PAINT
8378	BRIDGESTONE AMERICAS INC	612066	INV	4/21/2020	804.90	PRINT & MAIL STORM BILLS MARCH
5696	GRAYBAR ELECTRIC COMPANY	9315263686	INV	4/21/2020	157.88	AC CONTACTOR FOR MCCARTY LANE LS
2126	MERRELL BROS INC	33931	INV	4/21/2020	34,548.51	LAND APPLICATION OF BIOSOLIDS FEBRUARY 2020
15688	AIRGAS INC	9099759592	INV	4/21/2020	309.33	EAR PLUGS AND NITRILE GLOVES
13117	BRIGHTVIEW HOLDINGS INC	6782430	INV	4/21/2020	129.00	SAGAMORE PKWY BIORETENTION AREA MAINT
6957	CHRISTOPHER B BURKE ENGINEERING LLC	18474	INV	4/21/2020	1,250.00	SW2 LAFAYETTE
6882	ELEMENT MATERIALS TECHNOLOGY DALEVILLE LLC	EFW248397IN	INV	4/21/2020	2,023.30	SAMPLE ANALYSIS - INDUSTRIAL AND BIOSOLIDS

Printed By: pking

12

CITY OF LAFAYETTE

Board List by Voucher

Board: BW042120 4/21/2020

Cash Account / Bank: 101080 - Cash-Horizon Utilities Op

2268	NSI LAB SOLUTIONS INC	377017	INV	4/21/2020	418.50	LAB QUALITY CONTROL SAMPLES-QU
9513	PVS CHEMICAL SOLUTIONS INC	507189	INV	4/21/2020	3,430.61	BISULFITE FOR TREATMENT
16613	PVS TECHNOLOGIES INC	268515	INV	4/21/2020	4,953.06	FERRIC FOR TREATMENT
8902	RIGG'S MOWERS & MORE INC	1126057	INV	4/21/2020	2,140.57	MOWER PM AND REPAIR - 379
16493	WASTE MANAGEMENT OF INDIANA LLC	7913045-0023-8	INV	4/21/2020	2,508.38	DISPOSAL OF GRIT GREASE AND SCREENINGS
3360	NUGENT INC	1316500	INV	4/21/2020	85,968.00	METERS FOR CHANGE OUT
3360	NUGENT INC	1316646	INV	4/21/2020	19,480.20	METERS FOR CHANGE OUT
3360	NUGENT INC	1316793	INV	4/21/2020	148.59	2" FLANGE METER GASKETS
6245	ENVIRONMENTAL LABORATORIES INC	20308667	INV	4/21/2020	150.00	BACTERIA SAMPLING
6245	ENVIRONMENTAL LABORATORIES INC	20308883	INV	4/21/2020	150.00	BACTERIA SAMPLING
6245	ENVIRONMENTAL LABORATORIES INC	20308989	INV	4/21/2020	75.00	BACTERIA SAMPLING
6245	ENVIRONMENTAL LABORATORIES INC	20309110	INV	4/21/2020	75.00	BACTERIA SAMPLING
6900	OFFICE DEPOT INC	458618220001	INV	4/21/2020	68.92	OFFICE SUPPLIES
6900	OFFICE DEPOT INC	458618222001	INV	4/21/2020	3.98	OFFICE SUPPLIES
3170	FERGUSON ENTERPRISES INC	CM012558	CRM	4/21/2020	-2,178.00	RETURNED UPPER BARRELS
3170	FERGUSON ENTERPRISES INC	0190717	INV	4/21/2020	2,178.00	HYDRANT UPPER BARREL
8681	CINTAS CORPORATION NO 2	4046436886	INV	4/21/2020	134.11	UNIFORMS WWPL
3170	FERGUSON ENTERPRISES INC	0196276	INV	4/21/2020	229.02	SCH 80 PVC FITTINGS
3170	FERGUSON ENTERPRISES INC	0196287	INV	4/21/2020	91.08	CHEMICAL FEED HOOK UPS
8098	PETTY CASH-SUSAN STEWART	033120	INV	4/21/2020	88.62	REPENISH PETTY CASH - MARCH 2020

13

CITY OF LAFAYETTE

Board List by Voucher

Board: BW042120 4/21/2020

Cash Account / Bank: 101080 - Cash-Horizon Utilities Op

9685	ROBERT A FORD	S30TH PARCEL8	INV	4/21/2020	500.00	PARCEL 8-S 30TH DRAINAGE-TEMPORARY EASEMENT
9160	BUTLER, FAIRMAN & SEUFERT INC	88724	INV	4/21/2020	2,074.50	UTILITY SERVICE AGREEMENTS-GENERAL SERVICES
14330	VS ENGINEERING INC	406804	INV	4/21/2020	1,271.25	9TH & KOSSUTH/CENTRAL & 18TH-DRAINAGE IMPROVEMEN
1387	HUSTON ELECTRIC INC	W36573	INV	4/21/2020	595.00	NORTH ST PROJECT-ELECTRICAL WORK OUTSIDE OF TAF
3675	REGIONS BANK	77659	INV	4/21/2020	825.00	ANNUAL ADMIN FEE FOR SEWER REV REF BOND 2013
			Board Total		**177,788.32**	

14

CITY OF LAFAYETTE

SPECIAL EVENT - PUBLIC PROPERTY USER APPLICATION & AGREEMENT

DO NOT USE FOR
* Contractor vehicle permit
OR
* Single Day Temporary Parking Restriction Request

DIRECTIONS

Step One:

- If this request involves closing a street
  Contact Lafayette Police – Special Operations Division / 765-807-1272
- If this request involves renting the Big Four Depot - Community Room, Riehle Plaza, or John T. Myers Pedestrian Bridge
  Contact Facilities Department for availability / 765-807-1323

Step Two:

- Complete and submit this application to Lafayette Clerk's Office
  City Hall, 2nd floor, 20 N 6th Street, Lafayette, IN / 765-807-1021

User Information

Date of Event: SATURDAYS 5/2 - 10/31/2020 + 11/21/2020 Time: From: 5 am/pm to: 130 am/pm

Name: ~~Rebecca Jones~~ Organization: Lafayette Farmers Market / Greater Lafayette Commerce

Street Address: 337 Columbia St

City: Lafayette State: IN Zip Code: 47901

Contact person(s): Rebecca Jones Phone Number(s): 765 742 4044

Email: rjones@greaterlafayettecommerce.com

Event Description: Farmer's Market (Weekly)

Caterer: n/a Caterer's Phone Number: n/a

This event will utilize the following venues (check all that apply):

☐ Big 4 Depot - Community Room ☐ Riehle Plaza ☐ John T. Myers Bridge

☐ City Right-of-way ☒ City Street ☒ Sidewalk ☐ Other _____

This event will include the following elements (check all that apply):

Estimated Attendance: _____ ☐ Private Trash Hauler (must be removed by 8am following day)

☒ Street/Sidewalk/Right-of-way restriction or closure ☒ Food or Beverages

☒ Restroom Facilities (required for events 4+ hours) ☒ Tents/Canopies

☐ Alcohol (security is required) ☐ Security (required when serving alcohol)

Not sure if you need an A&E Permit? Go to:

☐ Amusement & Entertainment Permit #_____ http://www.in.gov/dhs/2795.htm

☐ Stage ☐ Fireworks ☐ Outdoor cooker/grill ☐ Other _____

Optional Equipment & Services:

☒ Traffic Control: barricades, ***No Parking*** signs, water barriers, ***Road Closed*** Signs $25

☐ City Equipment: Trash totes, picnic tables, other $25

Timetable *(Minimum # of days. Advanced planning is encouraged; sequence remains the same)*

0	7 days		14 days	21 days			42 days
	Pre-planning		Notices	Event Preparation			Event
Begin	1st week	2nd week	3rd week	4th week	5th week	6th week	
	First contact	Submit Application Pre-event Meeting	Contact Neighbors prior to Board of Works Hearing	Board of Works Public Hearing & Approval			Date of Event

Application submittal checklist

☑ Application

☑ Pre-event meeting (if required)

☐ Good Neighbor letter to neighboring properties (send out prior to Board of Works hearing)

☑ Letter of request to Board of Works (omit if only using Big Four Depot community room)

☐ Receipt – payment made to City of Lafayette

- Damage Deposit: $ _____ (required only when renting Depot)
- Permit Fee: $_____ (fee waived when renting Depot)
- Rental Fee: $ _____
- Equipment & Services: $ _____ (optional)

☑ Certificate of Insurance

☐ Amusement & Entertainment Permit # _____

Not sure if you need an A&E Permit? Want more information? Go to: http://www.in.gov/dhs/2795.htm and see definition of A&E Permit in **Rule and Regulations** instructions found at the same link as the **Special Event Application**

☐ Traffic Control / Public Safety / Emergency Plan

☑ User Agreement

☐ Board of Public Works and Safety meeting (if required)

USER AGREEMENT:

INDEMNIFICATION AND RELEASE. In consideration of being permitted the use of the venue(s) indicated above on this document (the "Property"), which Property is owned by the City of Lafayette, User as indicated below, for User and User's legal representatives, successors, and assigns, hereby releases waives and discharges the City of Lafayette, it officers, departments and employees and of them (herein collectively, "City") from all liability to User and User's officers, members, legal representatives, successors, invitees and assigns (herein collectively "User") from any and all loss or damage, and any claim of damages resulting therefore, on account of injury to persons or property arising out of possession or use of the Property, whether caused by the negligence of City, or any of them, or otherwise, resulting during the time the User is entitled to occupy and use the Property. User shall exercise the privileges under this Agreement at User's own risk, and irrespective of any negligence of City, User shall indemnify and hold City harmless from any and all liability for all damages, costs, losses and expenses resulting from, arising out of, or in any way connected with User's use and possession of the Property, including attorney fees incurred by City in defending any action arising out of User's possession or use of the Property, whether caused by negligence of the City, or any of them, or otherwise. City shall not be liable to User for any reason whatever User's occupation or use of the Property shall be hindered or disturbed. User agrees that User has made inspection of the Property and is not relying upon any representations of City or any of them as to the condition of state of repair of the Property or to its suitability for any particular purpose. This release, waiver, and indemnification is intended to be as broad and inclusive as permitted by the laws of the State of Indiana, and if any portion thereof is held invalid, the balance shall, notwithstanding, continue in full legal force and effect.

I have read the above Indemnification and Release and the Policy and Rules governing the use of any public property, city street, sidewalk or public property within the city's right-of-way, the James F. Riehle Plaza, Big Four Community Room, and John T. Myers Main Street Pedestrian Bridge. I agree on my own behalf, and on behalf of the group or organization I am authorized to represent, to such Indemnification and Release and to follow such Rules and Regulations which are incorporated and made a part of this user agreement.

"Lafayette Board of Works"

By: _____

"User"

By: _____
Signature

Printed: Rebecca Jones

Date: 4/7/2020

Greater Lafayette Commerce

Cindy Murray
Board of Works
City of Lafayette
20 N. 6th Street
Lafayette, IN 47901

April 7, 2020

Dear Cindy,

We are writing to request approval for street closures for the Lafayette Farmers Markets. The dates, times and closures are listed below.

The following dates we are requesting that there be no parking on 5th Street between Main and Columbia Streets. The closure will take place from 5:00am to 1:30pm with market hours running from 8:00am to NOON.
November 21, 2020

On Saturdays from May 2, 2020 through October 31, 2020 we are requesting that there be no parking on 5th Street between Main and Columbia Streets. The closure will take place from 5:00am to 1:30pm with market hours running from 8:00am to 12:30pm.

We appreciate your consideration.

Sincerely,

Rebecca Jones
Purdue & Lafayette Farmers Market Manager
Greater Lafayette Commerce | 765-742-4044 office | 765-203-9393 cell

Greater Lafayette Commerce
Be Greater!

337 Columbia Street
Lafayette, IN 47901

Greater Lafayette Commerce

April 7, 2020

Re: Historic Lafayette Farmers Market

Dear Downtown Stakeholder,

The Lafayette Farmers Market is just around the corner and Greater Lafayette Commerce wants to make you aware of some special dates and road closures we are requesting.

The Farmers Market takes place May – October every Saturday from 8:00am to 12:30pm with **road closures at 5:00am to 1:00pm** on 5th Street between Main and Columbia.

We will also be requesting **full closure** of 5th Street between Main and Columbia for the following Mini Market dates:

Saturday, November 21, 5:00am to 1:30pm – Thanksgiving Mini Market
Market will run from 8:00am to Noon

Please let me know if you have any questions or concerns, (765) 742-4044. We appreciate your cooperation as we seek to raise awareness of downtown Lafayette and all it has to offer. Thank you in advance.

Sincerely,

Rebecca Jones
Purdue & Lafayette Farmers Market Manager
Greater Lafayette Commerce | 765-742-4044 office | 765-203-9393 cell

Greater Lafayette Commerce
Be Greater!

337 Columbia Street
Lafayette, IN 47901

Client#: 89171 LAFALAF

ACORD™ CERTIFICATE OF LIABILITY INSURANCE

DATE (MM/DD/YYYY) 2/24/2020

THIS CERTIFICATE IS ISSUED AS A MATTER OF INFORMATION ONLY AND CONFERS NO RIGHTS UPON THE CERTIFICATE HOLDER. THIS CERTIFICATE DOES NOT AFFIRMATIVELY OR NEGATIVELY AMEND, EXTEND OR ALTER THE COVERAGE AFFORDED BY THE POLICIES BELOW. THIS CERTIFICATE OF INSURANCE DOES NOT CONSTITUTE A CONTRACT BETWEEN THE ISSUING INSURER(S), AUTHORIZED REPRESENTATIVE OR PRODUCER, AND THE CERTIFICATE HOLDER.

IMPORTANT: If the certificate holder is an ADDITIONAL INSURED, the policy(ies) must have ADDITIONAL INSURED provisions or be endorsed. If SUBROGATION IS WAIVED, subject to the terms and conditions of the policy, certain policies may require an endorsement. A statement on this certificate does not confer any rights to the certificate holder in lieu of such endorsement(s).

PRODUCER	CONTACT NAME: Amanda Haynes	
MBAH Insurance 2663 Duncan Road Lafayette, IN 47904	PHONE (A/C, No, Ext): 765 423-5421	FAX (A/C, No):
	E-MAIL ADDRESS: ahaynes@mbah.com	
	INSURER(S) AFFORDING COVERAGE	NAIC #
	INSURER A : The Cincinnati Insurance Company	10677
INSURED Lafayette-West Lafayette DevelopmentCorp DBA: Greater Lafayette Commerce P O Box 348 Lafayette, IN 47902	INSURER B : Accident Fund Insurance Co of America	10166
	INSURER C :	
	INSURER D :	
	INSURER E :	
	INSURER F :	

COVERAGES **CERTIFICATE NUMBER:** **REVISION NUMBER:**

THIS IS TO CERTIFY THAT THE POLICIES OF INSURANCE LISTED BELOW HAVE BEEN ISSUED TO THE INSURED NAMED ABOVE FOR THE POLICY PERIOD INDICATED. NOTWITHSTANDING ANY REQUIREMENT, TERM OR CONDITION OF ANY CONTRACT OR OTHER DOCUMENT WITH RESPECT TO WHICH THIS CERTIFICATE MAY BE ISSUED OR MAY PERTAIN, THE INSURANCE AFFORDED BY THE POLICIES DESCRIBED HEREIN IS SUBJECT TO ALL THE TERMS, EXCLUSIONS AND CONDITIONS OF SUCH POLICIES. LIMITS SHOWN MAY HAVE BEEN REDUCED BY PAID CLAIMS.

INSR LTR	TYPE OF INSURANCE	ADDL INSR	SUBR WVD	POLICY NUMBER	POLICY EFF (MM/DD/YYYY)	POLICY EXP (MM/DD/YYYY)	LIMITS	
A	X COMMERCIAL GENERAL LIABILITY			EPP0013610	03/01/2020	03/01/2021	EACH OCCURRENCE	$1,000,000
	CLAIMS-MADE X OCCUR						DAMAGE TO RENTED PREMISES (Ea occurrence)	$500,000
							MED EXP (Any one person)	$10,000
							PERSONAL & ADV INJURY	$1,000,000
	GEN'L AGGREGATE LIMIT APPLIES PER:						GENERAL AGGREGATE	$2,000,000
	X POLICY PRO-JECT LOC						PRODUCTS - COMP/OP AGG	$2,000,000
	OTHER:							$
A	AUTOMOBILE LIABILITY			EPP0013610	03/01/2020	03/01/2021	COMBINED SINGLE LIMIT (Ea accident)	$1,000,000
	ANY AUTO						BODILY INJURY (Per person)	$
	OWNED AUTOS ONLY / SCHEDULED AUTOS						BODILY INJURY (Per accident)	$
	X HIRED AUTOS ONLY / X NON-OWNED AUTOS ONLY						PROPERTY DAMAGE (Per accident)	$
								$
A	X UMBRELLA LIAB X OCCUR			EPP0013610	03/01/2020	03/01/2021	EACH OCCURRENCE	$2,000,000
	EXCESS LIAB CLAIMS-MADE						AGGREGATE	$2,000,000
	DED RETENTION $							$
B	WORKERS COMPENSATION AND EMPLOYERS' LIABILITY			WCV5010320	03/01/2020	03/01/2021	X PER STATUTE OTH-ER	
	ANY PROPRIETOR/PARTNER/EXECUTIVE OFFICER/MEMBER EXCLUDED? Y/N: N	N/A					E.L. EACH ACCIDENT	$100,000
	(Mandatory in NH)						E.L. DISEASE - EA EMPLOYEE	$100,000
	If yes, describe under DESCRIPTION OF OPERATIONS below						E.L. DISEASE - POLICY LIMIT	$500,000

DESCRIPTION OF OPERATIONS / LOCATIONS / VEHICLES (ACORD 101, Additional Remarks Schedule, may be attached if more space is required)

City of Lafayette is an additional insured with respects to general liability.

CERTIFICATE HOLDER

City of Lafayette
20 N 6th St
Lafayette, IN 47901

CANCELLATION

SHOULD ANY OF THE ABOVE DESCRIBED POLICIES BE CANCELLED BEFORE THE EXPIRATION DATE THEREOF, NOTICE WILL BE DELIVERED IN ACCORDANCE WITH THE POLICY PROVISIONS.

AUTHORIZED REPRESENTATIVE

© 1988-2015 ACORD CORPORATION. All rights reserved.

The ACORD name and logo are registered marks of ACORD

AHAYN