CITY OF LAFAYETTE

Board of Public Works and Safety
Lafayette City Hall: Common Council Chambers
Caucus is Tuesday at 8:30AM in Board of Works room

Meeting: January 21, 2020

PLEDGE OF ALLEGIANCE

APPROVAL OF MINUTES

a. January 14, 2020

Documents:

01142020.pdf

NEW BUSINESS

Engineering

a. Master Services Agreement With American Structurepoint

Documents:

Master Services Agreement-American Structurepoint.pdf

b. Task Order #1-Master Services Agreement With American Structurepoint

Documents:

Task Order 1-Master Services Agreement with American Structurepoint.pdf

c. Change Order #3-Manufacturer's Drive

Documents:

Change Order 3-Manufacturers Drive.pdf

d. Change Order #2-City Hall HVAC Upgrades

Documents:

Change Order 2-City Hall HVAC Upgrades.pdf

Economic Development

a. Amendment #2-Long Center Lease Agreement

Documents:

Long Center-Lease Amendment 2020.pdf

b. 2020 Lafayette Theater Lease Agreement

Documents:

Lafayette Theater Lease Agreement 2020.pdf

Lafayette Housing Authority

a. Agreement Between The Lafayette Housing Consortium And New Chauncey Housing, Inc CHDO Operating Funds Agreement 2019-2020

Documents:

New Chauncey Housing, Inc CHDO Agreement 2019-2020.pdf

CLAIMS

a. Claims 01/21/2020

Documents:

Claims 01212020.pdf

MISCELLANEOUS

a. Banner Request-Yoga On The Bridge

Documents:

Banner Request-Yoga on the Bridge.pdf

b. Revised Special Event Application And User Agreement

Documents:

Revised Special Event Application.pdf

A list of all permits issued for the preceding week is available at http://www.lafayette.in.gov/DocumentCenter/Index/375

BOARD OF PUBLIC WORKS AND SAFETY
MINUTES
January 14, 2020

Regular Session:

The Board of Public Works and Safety met in regular session on Tuesday, January 14, 2020 at 9:00 a.m. in the Common Council Chambers. Members present were: Amy Moulton, Cindy Murray, Ron Shriner and Norm Childress. Absent: Gary Henriott

Jacque Chosnek, 1st Deputy City Attorney, was also present.

Mrs. Murray called the meeting to order.

The Pledge of Allegiance was given to the flag of our Country.

MINUTES

Mrs. Moulton moved for approval of the minutes from the January 7, 2020 regular meeting. Mr. Childress seconded. Passed.

NEW BUSINESS

Water Works

Recommendation for Award- Cason Street Water Main Extension

Kerry Smith, Water Works Superintendent, presented to the Board and recommended approval of a Recommendation for Award for the Cason Street Water Main Extension Project with Miller Pipeline, LLC in the amount of $1,600,696.00. This project includes approximately 880 feet of 24 inch water main and 3,010 feet of 30 inch water main on Cason Street between 18th Street and 30th Street. Mr. Shriner moved for approval. Mrs. Moulton seconded. Passed.

Engineering

Permission to Advertise-36th Street Roadway Improvements, Phase 1

Jeromy Grenard, Public Works Director, presented to the Board and recommended approval of a Permission to Advertise for the 36th Street Roadway Improvements, Phase 1. The publications are set to run on January 17 & 24, 2020 with a bid opening on February 11, 2020. Mr. Grenard stated that this project is being partially funded by Community Crossings Matching Grant monies by the State of Indiana. Mr. Childress moved for approval. Mrs. Moulton seconded.

Permission to Advertise-N. 19th Street, Underwood Street, and Old US 231 Resurface

Mr. Grenard presented to the Board and recommended approval of a Permission to Advertise for the N. 19th Street, Underwood Street, and Old US 231 Resurface. The publications are set to run on January 17 & 24, 2020 with a bid opening on February 11, 2020. Mr. Grenard stated that this project is being partially funded by Community Crossings Matching Grant monies by the State of Indiana. Mrs. Moulton moved for approval. Mr. Shriner seconded. Passed.

Acceptance for Maintenance-Barrington Woods, Section 1

Dave Griffee, Engineering, presented to the Board and recommended approval of an Acceptance for Maintenance for Barrington Woods, Section 1 with Atlas Excavating provided by Fairfield Contractors, Inc. This subdivision is located on the north side of CR E 50 S west of McCarty Lane and consists of 78 residential lots. The 3-year maintenance bond in the amount of $112,590.20 has been submitted. Mrs. Moulton moved for approval. Mr. Childress seconded. Passed.

CLAIMS

Tim Clary, Controller, presented for Board approval, Claims in the amount of $10,458,373.14. Mrs. Murray asked if there were any further questions and there were none. Mr. Childress moved for approval. Mr. Shriner seconded. Passed. Mrs. Moulton abstained.

MISCELLANEOUS

Special Event Request-McAllister Center Carriage Rides (Father-Daughter Dance)

Emily Butler, McAllister Center, presented to the Board and recommended approval of a Special Event Request for the McAllister Center Carriage Rides to be held on February 15, 2020 from 5:00-9:00pm on the streets surrounding McAllister Center for carriage rides. Mrs. Moulton moved for approval. Mr. Shriner seconded. Passed.

Time: 9:06 a.m.

BOARD OF PUBLIC WORKS AND SAFETY
Cindy Murray s/s
President Pro-Tem

ATTEST: Mindy Miller s/s
Mindy Miller, 1st Deputy Clerk

Minutes written by Mindy Miller, 1st Deputy Clerk
*A digital audio recording of this meeting is available in the Lafayette City Clerk's Office or online at http://www.lafayette.in.gov/agendacenter.
**A list of all permits issued for the preceding week is available at http://www.lafayette.in.gov/DocumentCenter/Index/375

CITY OF
LAFAYETTE

Office of the City Engineer

January 14, 2020

Board of Public Works and Safety
City of Lafayette
20 N 6th Street
Lafayette, IN 47901

Dear Board Members:

You have before you a new Master Services Agreement with American Structurepoint. Our previous MSA was 7 years old and in need of being updated. This MSA has an initial limit of 3 years, unless and until it is amended or replaced.

This contract has been reviewed by the City Attorney and I recommend it for your approval.

Sincerely,

Jeromy L. Grenard

Jeromy L. Grenard, PE
City Engineer

SHORT FORM OF AGREEMENT BETWEEN OWNER AND ENGINEER FOR PROFESSIONAL SERVICES

THIS IS AN AGREEMENT effective as of January 10, 2020 ("Effective Date") between City of Lafayette ("Owner") and American Structurepoint, Inc. ("Engineer").

Owner's Project, of which Engineer's services under this Agreement are a part, is generally identified as follows: On-Call Services ("Project").

Engineer's services under this Agreement are generally identified as follows: on-call, as-needed professional services. ("Services"). Upon request by Owner, Engineer will prepare a detailed fee proposal, including anticipated costs for each task assigned. The proposal will be submitted to the Owner for approval prior to commencing the services.

Upon execution, this Agreement effectively terminates the on-call agreement between the parties dated May 28, 2013.

Owner and Engineer further agree as follows:

1.01 *Basic Agreement and Period of Service*

A. Engineer shall provide or furnish the Services set forth in this Agreement. If authorized by Owner, or if required because of changes in the Project, Engineer shall furnish services in addition to those set forth above ("Additional Services").

B. Engineer shall complete its Services within the following specific time period: ***as specified in each individual task order.*** If no specific time period is indicated, Engineer shall complete its Services within a reasonable period of time.

C. This Agreement shall be effective and applicable to Task Orders issued hereunder for 3 years from Effective Date of the Agreement and may be extended or renewed, with or without changes, by written amendment establishing a new term.

D. If, through no fault of Engineer, such periods of time or dates are changed, or the orderly and continuous progress of Engineer's Services is impaired, or Engineer's Services are delayed or suspended, then the time for completion of Engineer's Services, and the rates and amounts of Engineer's compensation, shall be adjusted equitably. **However, it being understood, that permitting the Engineer to proceed to complete any services, or any part of them after the date to which the time of completion may have been extended, shall in no way operate as a waiver on the part of the Owner or any of its rights herein.**

2.01 *Payment Procedures*

A. *Invoices:* Engineer shall prepare invoices in accordance with its standard invoicing practices and submit the invoices to Owner on a monthly basis. Invoices are due and payable within 30 days of receipt. If Owner fails to make any payment due Engineer for Services, Additional Services, and expenses within 30 days after

This document is a MODIFIED version of EJCDC® E-520, Copyright © 2015 by the National Society of Professional Engineers, American Council of Engineering Companies, and American Society of Civil Engineers, or is based in part on excerpts from copyrighted EJCDC documents. Those portions of the text that originated in copyrighted EJCDC documents remain subject to the copyright.

receipt of Engineer's invoice, then (1) the amounts due Engineer will be increased at the rate of 1.0% per month (or the maximum rate of interest permitted by law, if less) from said thirtieth day, and (2) in addition Engineer may, after giving seven days written notice to Owner, suspend Services under this Agreement until Engineer has been paid in full all amounts due for Services, Additional Services, expenses, and other related charges. Owner waives any and all claims against Engineer for any such suspension.

B. *Payment:* As compensation for Engineer providing or furnishing Services and Additional Services, Owner shall pay Engineer as set forth in Paragraphs 2.01, 2.02 (Services), and 2.03 (Additional Services). If Owner disputes an invoice, either as to amount or entitlement, then Owner shall promptly advise Engineer in writing of the specific basis for doing so, may withhold only that portion so disputed, and must pay the undisputed portion.

2.02 *Basis of Payment*

A. Owner shall pay Engineer for Services as specified on each task order and as follows:

1. A Lump Sum amount. The portion of the compensation amount billed monthly for Engineer's Services will be based upon Engineer's estimate of the percentage of the total Services actually completed during the billing period. **OR**

2. An amount equal to the cumulative hours charged to the Project by each class of Engineer's employees times standard hourly rates for each applicable billing class, plus Engineer's consultants' charges, if any. **Each task order shall contain the applicable hourly rates.**

3. Reimbursable expenses will be invoiced separately at 1.1 times their direct cost.

B. <u>Changes in Work</u>. In the event that either the Owner or Engineer determine that a major change in scope, character or complexity of the work is needed after the work has progressed as directed by the Owner, both parties in the exercise of their reasonable judgment shall negotiate the changes and the Engineer shall not commence the additional work or the change of the scope of work until a supplemental agreed is executed and the Owner has provided written notice to the Engineer to proceed.

2.03 *Additional Services:* For Additional Services, Owner shall pay Engineer an amount equal to the cumulative hours charged in providing the Additional Services by each class of Engineer's employees, times standard hourly rates for each applicable billing class; plus reimbursement of expenses incurred in connection with providing the Additional Services and Engineer's consultants' charges, if any. ~~Engineer's standard hourly rates are attached as Appendix 1.~~

3.01 *Termination*

A. The obligation to continue performance under this Agreement may be terminated:

1. For cause,

a. By either party upon ~~30~~ **15** days written notice in the event of substantial failure by the other party to perform in accordance with the Agreement's terms through no fault of the terminating party. Failure to pay Engineer for its services is a substantial failure to perform and a basis for termination.

This document is a MODIFIED version of EJCDC® E-520, Copyright © 2015 by the National Society of Professional Engineers, American Council of Engineering Companies, and American Society of Civil Engineers, or is based in part on excerpts from copyrighted EJCDC documents. Those portions of the text that originated in copyrighted EJCDC documents remain subject to the copyright.

b. By Engineer:

1) upon seven days written notice if Owner demands that Engineer furnish or perform services contrary to Engineer's responsibilities as a licensed professional; or

2) upon seven days written notice if the Engineer's Services are delayed for more than 90 days for reasons beyond Engineer's control, or as the result of the presence at the Site of undisclosed Constituents of Concern, as set forth in Paragraph 5.01.I.

c. Engineer shall have no liability to Owner on account of a termination for cause by Engineer.

d. Notwithstanding the foregoing, this Agreement will not terminate as a result of a substantial failure under Paragraph 3.01.A.1.a if the party receiving such notice begins, within seven days of receipt of such notice, to correct its substantial failure to perform and proceeds diligently to cure such failure within no more than 30 days of receipt of notice; provided, however, that if and to the extent such substantial failure cannot be reasonably cured within such 30 day period, and if such party has diligently attempted to cure the same and thereafter continues diligently to cure the same, then the cure period provided for herein shall extend up to, but in no case more than, 60 days after the date of receipt of the notice.

2. For convenience, by Owner effective upon **30 days** ~~Engineer's receipt of~~ written notice from Owner.

B. In the event of any termination under Paragraph 3.01, Engineer will be entitled to invoice Owner and to receive full payment for all Services and Additional Services performed or furnished in accordance with this Agreement, plus reimbursement of expenses incurred through the effective date of termination in connection with providing the Services and Additional Services, and Engineer's consultants' charges, if any.

4.01 *Successors, Assigns, and Beneficiaries*

A. Owner and Engineer are hereby bound and the successors, executors, administrators, and legal representatives of Owner and Engineer (and to the extent permitted by Paragraph 4.01.B the assigns of Owner and Engineer) are hereby bound to the other party to this Agreement and to the successors, executors, administrators, and legal representatives (and said assigns) of such other party, in respect of all covenants, agreements, and obligations of this Agreement.

B. Neither Owner nor Engineer may assign, sublet, or transfer any rights under or interest (including, but without limitation, money that is due or may become due) in this Agreement without the written consent of the other party, except to the extent that any assignment, subletting, or transfer is mandated by law. Unless specifically stated to the contrary in any written consent to an assignment, no assignment will release or discharge the assignor from any duty or responsibility under this Agreement.

C. Unless expressly provided otherwise, nothing in this Agreement shall be construed to create, impose, or give rise to any duty owed by Owner or Engineer to any Constructor, other third-party individual or entity, or to any surety for or employee of any of them. All duties and responsibilities undertaken pursuant to this Agreement will be for the sole and exclusive benefit of Owner and Engineer and not for the benefit of any other party.

This document is a MODIFIED version of EJCDC® E-520, Copyright © 2015 by the National Society of Professional Engineers, American Council of Engineering Companies, and American Society of Civil Engineers, or is based in part on excerpts from copyrighted EJCDC documents. Those portions of the text that originated in copyrighted EJCDC documents remain subject to the copyright.

5.01 *General Considerations*

A. The standard of care for all professional engineering and related services performed or furnished by Engineer under this Agreement will be the care and skill ordinarily used by members of the subject profession practicing under similar circumstances at the same time and in the same locality. Engineer makes no warranties, express or implied, under this Agreement or otherwise, in connection with any services performed or furnished by Engineer. Subject to the foregoing standard of care, Engineer and its consultants may use or rely upon design elements and information ordinarily or customarily furnished by others, including, but not limited to, specialty contractors, manufacturers, suppliers, and the publishers of technical standards.

B. Engineer shall not at any time supervise, direct, control, or have authority over any Constructor's work, nor shall Engineer have authority over or be responsible for the means, methods, techniques, sequences, or procedures of construction selected or used by any Constructor, or the safety precautions and programs incident thereto, for security or safety at the Project site, nor for any failure of a Constructor to comply with laws and regulations applicable to such Constructor's furnishing and performing of its work. Engineer shall not be responsible for the acts or omissions of any Constructor.

C. Engineer neither guarantees the performance of any Constructor nor assumes responsibility for any Constructor's failure to furnish and perform its work.

D. Engineer's opinions (if any) of probable construction cost are to be made on the basis of Engineer's experience, qualifications, and general familiarity with the construction industry. However, because Engineer has no control over the cost of labor, materials, equipment, or services furnished by others, or over contractors' methods of determining prices, or over competitive bidding or market conditions, Engineer cannot and does not guarantee that proposals, bids, or actual construction cost will not vary from opinions of probable construction cost prepared by Engineer. If Owner requires greater assurance as to probable construction cost, then Owner agrees to obtain an independent cost estimate.

E. Engineer shall not be responsible for any decision made regarding the construction contract requirements, or any application, interpretation, clarification, or modification of the construction contract documents other than those made by Engineer or its consultants.

F. All documents prepared or furnished by Engineer are instruments of service, and Engineer retains an ownership and property interest (including the copyright and the right of reuse) in such documents, whether or not the Project is completed. Owner shall have a limited license to use the documents on the Project, extensions of the Project, and for related uses of the Owner, **and be entitled to copies or reproducible sets,** subject to receipt by Engineer of full payment due and owing for all Services and Additional Services relating to preparation of the documents and subject to the following limitations:

   1. Owner acknowledges that such documents are not intended or represented to be suitable for use on the Project unless completed by Engineer, or for use or reuse by Owner or others on extensions of the Project, on any other project, or for any other use or purpose, without written verification or adaptation by Engineer;

   2. any such use or reuse, or any modification of the documents, without written verification, completion, or adaptation by Engineer, as appropriate for the specific purpose intended, will be at Owner's sole risk and without liability or legal exposure to Engineer or to its officers, directors, members, partners, agents, employees, and consultants;

This document is a MODIFIED version of EJCDC® E-520, Copyright © 2015 by the National Society of Professional Engineers, American Council of Engineering Companies, and American Society of Civil Engineers, or is based in part on excerpts from copyrighted EJCDC documents. Those portions of the text that originated in copyrighted EJCDC documents remain subject to the copyright.

3. Owner shall indemnify and hold harmless Engineer and its officers, directors, members, partners, agents, employees, and consultants from all claims, damages, losses, and expenses, including attorneys' fees, arising out of or resulting from any use, reuse, or modification of the documents without written verification, completion, or adaptation by Engineer; and

4. such limited license to Owner shall not create any rights in third parties.

G. Owner and Engineer may transmit, and shall accept, Project-related correspondence, documents, text, data, drawings, information, and graphics, in electronic media or digital format, either directly, or through access to a secure Project website, in accordance with a mutually agreeable protocol.

H. To the fullest extent permitted by law, Owner and Engineer (1) waive against each other, and the other's employees, officers, directors, members, agents, insurers, partners, and consultants, any and all claims for or entitlement to special, incidental, indirect, or consequential damages arising out of, resulting from, or in any way related to this Agreement or the Project~~, and (2) agree that Engineer's total liability to Owner under this Agreement **for any given task** shall be limited to **$50,000** or the total amount of compensation received by Engineer **for that task**, whichever is greater.~~

I. The parties acknowledge that Engineer's Services do not include any services related to unknown or undisclosed Constituents of Concern. If Engineer or any other party encounters, uncovers, or reveals an unknown or undisclosed Constituent of Concern, then Engineer may, at its option and without liability for consequential or any other damages, suspend performance of Services on the portion of the Project affected thereby until such portion of the Project is no longer affected, or terminate this Agreement for cause if it is not practical to continue providing Services.

J. Owner and Engineer agree to negotiate each dispute between them in good faith during the 30 days after notice of dispute. If negotiations are unsuccessful in resolving the dispute, then the dispute shall be mediated. If mediation is unsuccessful, then the parties may exercise their rights at law.

K. ~~This Agreement is to be governed by the law of the state in which the Project is located.~~ **The Agreement and all of the terms and provisions shall be interpreted and construed according to the laws of the State of Indiana. Should any clause, paragraph, or other part of this Agreement be held or declared to be void or illegal, for any reason, by any court having competent jurisdiction, all other clause, paragraph or other part of the Agreement, shall remain in full force and effect.**

L. Engineer's Services and Additional Services do not include: (1) serving as a "municipal advisor" for purposes of the registration requirements of Section 975 of the Dodd-Frank Wall Street Reform and Consumer Protection Act (2010) or the municipal advisor registration rules issued by the Securities and Exchange Commission; (2) advising Owner, or any municipal entity or other person or entity, regarding municipal financial products or the issuance of municipal securities, including advice with respect to the structure, timing, terms, or other similar matters concerning such products or issuances; (3) providing surety bonding or insurance-related advice, recommendations, counseling, or research, or enforcement of construction insurance or surety bonding requirements; or (4) providing legal advice or representation.

M. During the term of any Task Order under this Agreement, the Engineer shall not engage on the project on a full or part-time basis any professional or technical personnel who are, or have been at any time during the period of the Task Order, in the employ of the Owner, except regularly retired employees.

This document is a MODIFIED version of EJCDC® E-520, Copyright © 2015 by the National Society of Professional Engineers, American Council of Engineering Companies, and American Society of Civil Engineers, or is based in part on excerpts from copyrighted EJCDC documents. Those portions of the text that originated in copyrighted EJCDC documents remain subject to the copyright.

N. Insurance. The Engineer shall at its own expense maintain in effect during the term of the Agreement the following insurance with limits as shown or greater:

1. General Liability (including automobile) – combined single limit of $2,000,000. The Owner shall be named as Additional Insured and be given a 30 day notice of cancellation, non-renewal or significant change of coverage. Engineer's insurance shall be written on a "primary" basis and the Owner's insurance program shall be in excess of all of Engineer's available coverage.

2. Worker's Compensation – statutory limit. Workers Compensation shall include a Waiver of Subrogation endorsement in favor of the Owner.

3. Professional Liability for protection against claims arising out of the performance of professional services caused by negligent error, omission or act in the amount of $2,000,000.

4. The Engineer shall provide Certificates of Insurances indicating the aforesaid coverage.

O. Indemnities. Engineer and Owner each agree to indemnify and hold the other harmless, and their respective officers, employees, agents and representatives from and against liability for all claims, losses, damages or expenses caused by the indemnifying party's negligent acts, errors or omissions. In the event claims, losses and damages or expenses are caused by the joint or concurrent negligence of the Owner and Engineer, they shall be borne by each party in proportion to its negligence.

P. Engineer must enroll in and verify the work eligibility status of all newly hired employees of the Engineer through the E-Verify program operated by the United States Department of Homeland Security. If the E-Verify program ceases to exist, the Engineer will not be required to verify the work eligibility status of newly hired employees through the E-Verify program. The Engineer affirms under penalties for perjury that the Engineer does not knowingly employ an unauthorized alien.

Q. Contracting with Iran. Consultant certifies that under penalties of perjury that it does not engage in investment activities in Iran as more particularly described in Indiana Code 5-22-16.5.

R. Tobacco Free Policy. Consultant, subcontractors and suppliers shall comply with the City of Lafayette's Tobacco Free Workplace Policy while on the job-site.

S. Waiver of Contract Breach. The waiver of one party of any breach of the Agreement or the failure of one party to enforce at any time, or for any period of time, any provisions hereof, shall be limited to the particular instances, shall not operate or be deemed to waive any future breaches of this Agreement and shall not be construed to be a waiver of any provision, except for that particular instance.

T. Non-Discrimination. Pursuant to Indiana and Federal law, the Consultant and the Consultant's subcontractors, if any, shall not discriminate against any employee or applicant for employment, to be employed in the performance of the work under the Agreement, with respect to hire, tenure, terms, conditions or privileges of employment or any matter directly or indirectly related to employment because of race, color, religion, sex, disability, national origin or ancestry. Breach of this covenant may be regarded as a material breach of the Agreement.

U. Public Record. The Consultant acknowledges that the City will not treat the Agreement as containing confidential information and may post this Agreement on the Indiana Transparency Portal as required by IC § 5-14-3.8-3.5.

This document is a MODIFIED version of EJCDC® E-520, Copyright © 2015 by the National Society of Professional Engineers, American Council of Engineering Companies, and American Society of Civil Engineers, or is based in part on excerpts from copyrighted EJCDC documents. Those portions of the text that originated in copyrighted EJCDC documents remain subject to the copyright.

6.01 *Total Agreement*

A. This Agreement (including any expressly incorporated attachments), constitutes the entire agreement between Owner and Engineer and supersedes all prior written or oral understandings. This Agreement may only be amended, supplemented, modified, or canceled by a duly executed written instrument. **Owner and Engineer hereby agree that any purchase orders, invoices, confirmations, acknowledgments or other similar documents executed or delivered with respect to the subject matter hereof that conflict with the terms of the Agreement shall be null, void and without effect to the extend they conflict with the terms of the Agreement.**

7.01 *Definitions*

A. *Constructor*—Any person or entity (not including the Engineer, its employees, agents, representatives, and consultants), performing or supporting construction activities relating to the Project, including but not limited to contractors, subcontractors, suppliers, Owner's work forces, utility companies, construction managers, testing firms, shippers, and truckers, and the employees, agents, and representatives of any or all of them.

B. *Constituent of Concern*—Asbestos, petroleum, radioactive material, polychlorinated biphenyls (PCBs), hazardous waste, and any substance, product, waste, or other material of any nature whatsoever that is or becomes listed, regulated, or addressed pursuant to (a) the Comprehensive Environmental Response, Compensation and Liability Act, 42 U.S.C. §§9601 et seq. ("CERCLA"); (b) the Hazardous Materials Transportation Act, 49 U.S.C. §§5101 et seq.; (c) the Resource Conservation and Recovery Act, 42 U.S.C. §§6901 et seq. ("RCRA"); (d) the Toxic Substances Control Act, 15 U.S.C. §§2601 et seq.; (e) the Clean Water Act, 33 U.S.C. §§1251 et seq.; (f) the Clean Air Act, 42 U.S.C. §§7401 et seq.; or (g) any other federal, State, or local statute, law, rule, regulation, ordinance, resolution, code, order, or decree regulating, relating to, or imposing liability or standards of conduct concerning, any hazardous, toxic, or dangerous waste, substance, or material.

IN WITNESS WHEREOF, the parties hereto have executed this Agreement, the Effective Date of which is indicated on page 1.

This document is a MODIFIED version of EJCDC® E-520, Copyright © 2015 by the National Society of Professional Engineers, American Council of Engineering Companies, and American Society of Civil Engineers, or is based in part on excerpts from copyrighted EJCDC documents. Those portions of the text that originated in copyrighted EJCDC documents remain subject to the copyright.

OWNER:	ENGINEER:
By: _____	By: Cash E. Canfield
Name: _____	Name: Cash E. Canfield, Executive Vice President
Date Signed: _____	Date Signed: 01-10-20
	Engineer License or Firm's Certificate Number: _____
	State of: Indiana
Address for giving notices:	Address for giving notices:
Mayor Tony Roswaki	Willis R. Conner
City of Lafayette	American Structurepoint, Inc.
20 N 6th Street	9025 River Road, Suite 200
Lafayette, Indiana 47901	Indianapolis, Indiana 46240

This document is a MODIFIED version of EJCDC® E-520, Copyright © 2015 by the National Society of Professional Engineers, American Council of Engineering Companies, and American Society of Civil Engineers, or is based in part on excerpts from copyrighted EJCDC documents. Those portions of the text that originated in copyrighted EJCDC documents remain subject to the copyright.

CITY OF
LAFAYETTE

Office of the City Engineer

January 14, 2020

Board of Public Works and Safety
City of Lafayette
20 N 6th Street
Lafayette, IN 47901

Dear Board Members:

You have before you a task order under our Master Services Agreement with American Structurepoint for the Haggerty Point Storm Sewer Extension. This Project will establish a stormwater outlet for the upcoming Park East Boulevard extension from Haggerty Lane to SR 38. Major components of this Project include:

- Survey
- Design of storm sewer trunk line
- Utility coordination
- Rule 5 Erosion Control Plan
- Limited bidding and construction phase engineering services (does not include full-time construction inspection)

The contract amount for this project is $38,100 lump-sum, plus $5,000 hourly not-to-exceed for construction phase services, for a total of $43,100.

This contract has been reviewed by the City Attorney and I recommend it for your approval.

Sincerely,

Jeromy L. Grenard

Jeromy L. Grenard, PE
City Engineer

This Task Order No. 1 for 2017.01317 is issued under the Master Agreement entered into on the 10th day of January, 2020, by and between

American Structurepoint, Inc.
9025 River Road, Suite 200
Indianapolis, Indiana 46240
hereinafter referred to as "Consultant", and

City of Lafayette
20 N 6th Street
Lafayette, Indiana 47901
hereinafter referred to as "Owner", wherein it is agreed as follows:

Project: Haggerty Point Storm Sewer Extension

For mutual consideration hereinafter set forth, the Consultant and Owner agree as follows:

A. The Consultant agrees to perform the services as described in attached Appendices A-D.

B. The schedule for services performed under this task order is to be determined at the time notice to proceed is given.

C. Owner agrees to compensate Consultant according to the payment terms of Appendix D.

D. Owner's representative for this project will be Jeromy Grenard.

IN WITNESS WHEREOF, the parties hereto have accepted, made, and executed this Task Order upon the terms, conditions, and provisions above stated and in the Prime Agreement the day and year signed by the last required signatory.

CONSULTANT:		OWNER:	
By	DocuSigned by: Nicholas Murphy A675AC40174B4E5 (signature)	By	(signature)
Name	Nicholas Murphy (print)	Name	(print)
Title	Project Manager	Title	
Date	1/13/2020	Date	

DocuSign Envelope ID: 84BFDBDE-23E9-4CF0-BC2D-600FFD09BDC2

APPENDIX "A"

SERVICES TO BE FURNISHED BY CONSULTANT:

In fulfillment of this Contract, the CONSULTANT shall comply with the requirements of the appropriate regulations and requirements of the City of Lafayette.

The CONSULTANT shall be responsible for performing the following activities:

A. General

1. The CONSULTANT shall provide engineering services to prepare storm sewer trunkline design plans, preliminary opinions of probable construction cost, and other submittal documents following the *City of Lafayette Construction Guidelines and Standards (2013)*, for the storm sewer trunkline described in Section C.

B. Topographic Survey

1. The CONSULTANT shall provide supplemental field surveys and topographic and utility mapping for design purposes. Utility mapping will be based upon information obtained from utility owners. The CONSULTANT shall survey the additional project area and provide the OWNER with one set of original field notes for the data accumulation surveys. The CONSULTANT's services shall be in accordance with IC 25-21.5; 865 IAC 1-12; and Chapter 106 of the INDOT Design Manual (Survey Manual). The CONSULTANT acknowledges that it has a copy of the Survey Manual. If there is any conflict between IC 25-21.5, 865 IAC 1-12, or the Survey Manual, the order of precedence will be:

   a. IC 25-21.5

   b. 865 IAC 1-12

   c. Survey Manual

2. The survey limits are generally described below and as shown in Attachment No. 1-A:

   a. Along the southern limit of the Haggerty Point Retention Pond owned by the Tippecanoe County Drainage Board for not more than 1,050 linear feet with a corridor width of 100 linear feet.

   b. Area between State Road 38 and the Haggerty Point Retention Pond for a length not greater than 200 linear feet and width not greater than 250 linear feet.

   c. Provide location, size, depth, material and direction of flow for storm sewer as indicated on as-builts provided by the Tippecanoe County Surveyor's office for the Haggerty Point Retention Pond outlet structures.

3. CONSULTANT shall make a request through the Indiana Underground Plant Protection Service as provided by Indiana Code 8-1-26 to have public utilities marked within the public rights-of-way and recorded easements. CONSULTANT will not be responsible for damages resulting from a utility company who will not respond or for utilities that are not marked or that are mismarked.

C. Storm Sewer Trunkline Design Services

The Consultant shall design a storm sewer system trunkline for the Park East Blvd. extension based on coordination and direction received from the Tippecanoe County Surveyor's office on August 8, 2019. The Park East Blvd. Extension storm sewer trunkline will be designed from the Park East Blvd. extension project limits, running west to the storm sewer system that connects Haggerty Pointe Pond to F-Lake. The storm sewer trunkline will connect to the 48-in. dia. storm sewer pipe north of SR 38. No analysis of the storm sewer system connecting Haggerty Pointe Retention Pond to F-Lake is included. Based on coordination efforts with Tippecanoe County Surveyor's office, this storm sewer system was designed to handle the Park East Blvd. Extension, un-detained, when it was constructed. The new storm sewer system will be designed in accordance with *City of Lafayette Stormwater Technical Standards Manual (v. Dec. 2011)*. The Consultant will submit a hydraulic report to the Tippecanoe County Surveyor's office to receive hydraulic approval. This scope includes up to two coordination meetings with the Tippecanoe County Surveyors office.

D. Utility Coordination

The CONSULTANT shall provide coordination necessary to prepare application documents and process utility relocation coordination to secure appropriate certifications and approvals necessary for construction of this project, including:

1. Coordinating with utilities and supplying necessary plans and design information for coordination of utility relocations in accordance with 105 IAC 13.

The CONSULTANT will conduct the necessary utility coordination for the storm sewer trunkline concurrently with the Park East Blvd. Extension LPA project.

E. Rule 5 Permit

The CONSULTANT shall prepare and submit a Rule 5 Erosion Control Plan to procure appropriate Notice of Intent for construction.

F. Opinion of Probable Cost For Construction

The opinion of probable cost will be prepared according to the current practices for INDOT and will include all items of work required for the complete construction of the work, including all temporary work necessary in connection therewith, but shall not include the cost of such items of work for which the OWNER, through its own forces or through other party or parties, will prepare detail plans. The unit prices to be used shall be in accordance with the methods used by INDOT.

G. Bidding Phase Services

The services for this phase will include the distribution and sale of plans and contract documents, issuing addenda as appropriate, attending the pre-bid conference, answering contractor questions, and participating in the evaluation of the bids for award. The Engineer shall not charge any third party more than $50 for the specifications for this project and $1.00 per sheet for the plan sheets for this Project.

H. Construction Phase Design Services

1. The CONSULTANT shall review all shop drawings for this contract during construction. Such reviews and approvals or other action will not extend to means, methods, techniques, sequences, or procedures of construction or to safety precautions and programs incident thereto, or accuracy or completeness of details, such as quantities, dimensions, weights or gauges, fabrication processes, coordination of the work with other trades, all of which are the sole responsibility of the Contractor. The CONSULTANT's review shall be conducted with reasonable promptness while allowing sufficient time in the CONSULTANT's judgment to permit adequate review. Review of a specific item shall not indicate that the CONSULTANT has reviewed the entire assembly of which the item is a component. The CONSULTANT shall not be responsible for any deviations from the Construction Documents not brought to the attention of the CONSULTANT in writing by the Contractor. The CONSULTANT shall not be required to review partial submissions or those for which submissions of correlated items have not been received.

2. Following the award of a construction contract, the CONSULTANT will be responsible for attending the preconstruction meeting.

3. During the course of construction, the CONSULTANT shall be available at reasonable times during normal working hours to respond to reasonable inquiries concerning the accuracy or intent of the CONSULTANT's plans. All such inquiries will be made only by persons designated by the OWNER to interpret the plans and contract documents for the benefit of the contractors and subcontractors performing the work. The CONSULTANT shall not be required to respond to inquiries by persons other than the OWNER's designated representative and shall not be required to engage in exhaustive or extensive analysis or interpretation of the plans.

4. As needed and directed by the OWNER, the CONSULTANT shall perform construction-phase utility coordination services as described in the 2013 Indiana Design Manual, Chapter 104, as revised.

I. Excluded Services

If authorized in writing by the OWNER, CONSULTANT shall furnish or obtain Additional Services, for an additional fee, for items that may become necessary due to unforeseen conditions or changes in the scope of the Project. These items include, but are not limited to:

a. Maintenance of Traffic Design
b. Environmental Services
c. Subsurface Utility Engineering
d. Railroad Coordination
e. IDNR Permitting
f. Alternate Bid Plans
g. Stormwater Detention Design
h. Stormwater Quality Analysis
i. Public Outreach, Coordination, or Information Meeting(s)
j. Right-of-Way Engineering
k. Land Acquisition Services

DocuSign Envelope ID: 84BFDBDE-23E9-4CF0-BC2D-600FFD09BDC2

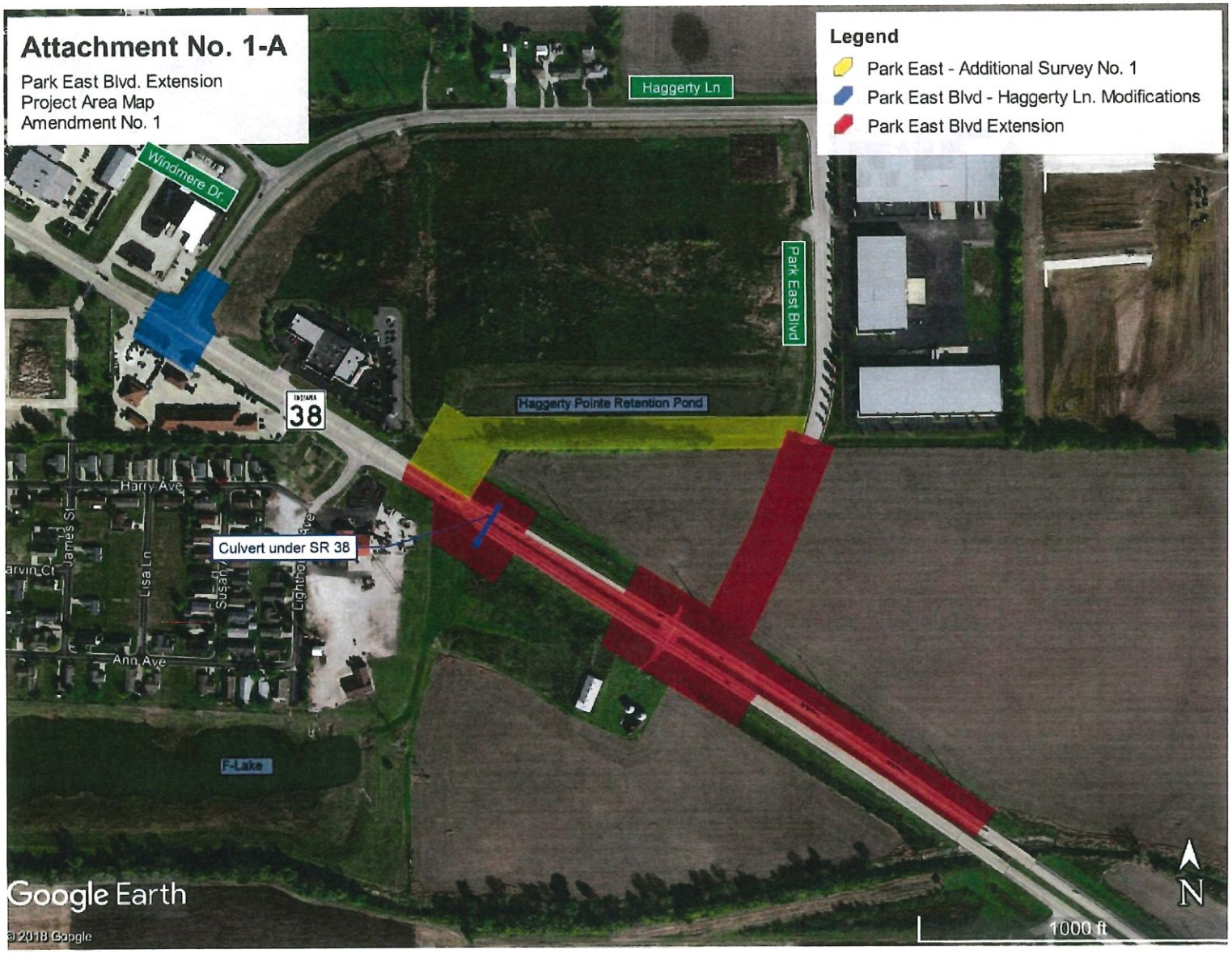

APPENDIX "B"

INFORMATION AND SERVICES TO BE FURNISHED BY OWNER:

The OWNER shall furnish the CONSULTANT with the following:

1. Criteria for design and details for signs, signals, lighting, highway and structures such as grades, curves, sight distances, clearances, design loading, etc.

2. Standard Specifications and standard drawings applicable to the project

3. All written views pertinent to the location and environmental studies that are received by the OWNER

4. Traffic assignments, traffic signal (new signal), traffic lighting warrants (new lighting)

5. Available data and previous studies from the transportation planning process

6. Utility plans available to OWNER covering utility facilities and the location of signals and underground conduits throughout the affected areas

7. Provide access to enter upon public and private lands as required for the CONSULTANT to perform work under this Contract

8. Aerial survey information

9. All legal services as may be required for development of the project

10. An OWNER representative with decision-making authority for inquiries

11. Payment for all permit and review fees required by agencies having jurisdiction over this project data

APPENDIX "C"

SCHEDULE:

No work under this Contract shall be performed by the CONSULTANT until the CONSULTANT receives a written notice to proceed from the OWNER.

All work by the CONSULTANT under this Contract shall be completed and delivered to the OWNER for review and approval within the approximate time periods shown in the following submission schedule:

A. Field Survey complete within 30 calendar days after receipt of notice to proceed from the OWNER.

B. Storm Sewer Trunkline Design

   1. Preliminary Plans within 30 calendar days after survey is complete.

   2. Final Plans within 90 calendar days after receipt from the Owner of approval of the Preliminary Plans. This submittal is contingent upon completion of all permits, hydraulic approval from Tippecanoe County Drainage Board, and OWNER approval of the Preliminary Plans.

C. Bidding Phase Services

   1. To be coordinate with OWNER based on agreed upon schedule at time of Final Plan acceptance by the OWNER.

APPENDIX "D"

COMPENSATION

A. Amount of Payment

1. The CONSULTANT shall be compensated for services to be performed under this Contract a total fee not to exceed $43,100 unless approved in writing by the OWNER.

2. The CONSULTANT shall be compensated for the following services on a lump-sum basis. The total obligation under this portion of the Contract shall not exceed $38,100 unless approved in writing by the OWNER.

a. Survey	$3,200
b. Storm Sewer Trunkline Design	$14,400
c. Utility Coordination	$5,300
d. Rule 5 Permit	$6,600
e. Bidding Phase Services	$8,600

3. For construction phase services, the CONSULTANT will be compensated on a labor rate multiplier basis. The CONSULTANT will be paid for the actual hours of work performed by essential personnel exclusively working on these tasks at the direct wage and salary rates of each employee multiplied by 3.02, PLUS direct non-salary costs as approved by OWNER. Direct non-salary costs shall be the actual out-of-pocket expenses of the CONSULTANT directly attributable to this Contract, such as fares, subsistence, mileage, equipment rentals, reproductions, approved subconsultant fees, etc. The fees for construction phase services will not exceed **$5,000** unless and until a supplemental agreement is executed.

B. Method of Payment

1. The CONSULTANT may submit a maximum of one (1) invoice voucher per calendar month for work covered under this Contract. The invoice voucher shall be submitted to the OWNER.

   The invoice voucher shall represent the value, to the OWNER, of the partially completed work as of the date of the invoice voucher. The CONSULTANT shall attach thereto a summary of each pay item in Section A.1 of this Appendix, percentage completed, and prior payments.

2. The OWNER, for and in consideration of the rendering of the engineering services provided for in Appendix "A", agrees to pay to the CONSULTANT for rendering such services the fees established above in the following manner:

   a. For completed work, and upon receipt of invoices from the CONSULTANT and the approval thereof by the OWNER, payments covering the work performed shall be due and payable to the CONSULTANT.

DocuSign Envelope ID: 84BFDBDE-23E9-4CF0-BC2D-600FFD09BDC2

b. From the partial payment thus computed, there shall be deducted all previous partial fee payments made to the CONSULTANT.

3. In the event of a substantial change in the scope, character or complexity of the work on the project, the maximum fee payable and the specified fee shall be adjusted in accordance with item 6, Changes In Work, of the General Provisions set out in this Contract.

DocuSign Envelope ID: 84BFDBDE-23E9-4CF0-BC2D-600FFD09BDC2

AMERICAN STRUCTUREPOINT, INC.

Road Design - Manhour Justification

Project: Park East Blvd. - Storm Sewer Trunkline Design
Description: Storm Sewer Trunkline Design

08-Oct-19

WORK CLASSIFICATION	ESTIMATED TIME (HOURS)					TOTAL
	Project Manager	Senior Engineer	Project Engineer	Staff Engineer	Senior Technician	
Preliminary Plans (40% complete)						
Coordinate Field Survey	2	0	0	0	0	2
Compile Field Survey Data	0	0	0	0	2	2
Generate Existing Ground Model	0	0	0	0	2	2
Plot and Check Topo	1	0	0	0	2	3
Develop Plan & Profile Sheets	0	1	0	0	5	6
Check Plan & Profile Sheets	1	0	0	0	1	2
Preliminary Drainage Analysis	2	4	8	4	0	18
Preliminary Quantity Computations	0	1	2	2	0	5
Preliminary Cost Estimate	1	0	0	1	0	2
Coordination Meeting with County Drainage Board	6	0	0	0	0	6
Submit Drainge Report to County	2	0	0	0	0	2
QC/QA Plans before Submittal	1	2	0	2	0	5
Subtotal	**16**	**8**	**10**	**9**	**12**	**55**
Final Plans (90%) Complete						
Stormwater System Drainage Design Updates	0	2	0	4	0	6
Finalize Drainage on Plans	0	1	0	0	4	5
Finalize Drainage	2	2	0	0	0	4
QC/QA Updated Draiange Report	2	2	0	2	0	6
Final Drainge Report to County	2	0	0	0	0	2
Update Quantity Computations	0	1	1	1	0	3
Coordination Meeting with County Drainage Board	6	0	0	0	0	6
Cost Estimate	1	0	0	1	0	2
QC/QA Plans	1	0	0	1	1	3
Subtotal	**14**	**8**	**1**	**9**	**5**	**37**

AMERICAN STRUCTUREPOINT, INC.

Road Design - Manhour Justification

Project: Park East Blvd. - Storm Sewer Trunkline Design
Description: Storm Sewer Trunkline Design

08-Oct-19

WORK CLASSIFICATION	ESTIMATED TIME (HOURS) Project Manager	Senior Engineer	Project Engineer	Staff Engineer	Senior Technician	TOTAL
Construction Plans (100%) Complete						
Final Plans Updates	0	2	0	4	0	6
Construction Plans	0	1	0	0	2	3
Cost Estimate	1	0	0	1	0	2
QC/QA Plans	1	0	0	1	1	3
Subtotal	**2**	**3**	**0**	**6**	**3**	**14**
TOTAL HOURS	**32**	**19**	**11**	**24**	**20**	**106**
WEIGHTED HOURLY RATE	$188.15	$140.91	$114.46	$84.00	$117.12	
DIRECT SALARY COST	$6,020.80	$2,677.29	$1,259.06	$2,016.00	$2,342.40	$14,315.55
DIRECT COSTS (See Below)						$91.20
TOTAL FEE						$14,406.75

	Unit Cost	Quantity	Cost
Mileage	$0.380	240	$91.20
Shipping	LSUM	0	$0.00
Meals	$26.00	0	$0.00
Lodging	$89.00	0	$0.00
Blueprints	$1.50	0	$0.00
Copies	$0.10	0	$0.00
Mylars	$3.50	0	$0.00
		TOTAL =	$91.20

AMERICAN STRUCTUREPOINT, INC.

Road Design - Manhour Justification

Project: Park East Blvd. - Storm Sewer Trunkline Design
Description: Utility Coordination

08-Oct-19

WORK CLASSIFICATION	ESTIMATED TIME (HOURS)					TOTAL
	Project Manager	Senior Engineer	Project Engineer	Staff Engineer	Senior Technician	
Utility Coordination Services						
Prepare and Distribute Initial Notices	0	2	0	2	0	
Prepare and Distribute Preliminary Plans	1	2	0	0	2	
Review Construction Plans for Utility Conflicts	0	4	0	8	0	
Prepare and Distribute Final Plans	0	0	0	2	2	
Review Relocation Plans	0	2	4	0	0	
Review Written Work Plans	0	2	4	0	0	
Coordinate with City to issue NTP	4	2	0	0	0	
Subtotal						
TOTAL HOURS	5	14	8	12	4	43
WEIGHTED HOURLY RATE	$188.15	$140.91	$114.46	$84.00	$117.12	
DIRECT SALARY COST	$940.75	$1,972.74	$915.68	$1,008.00	$468.48	$5,305.65
DIRECT COSTS (See Below)						$0.00
TOTAL FEE						$5,305.65

	Unit Cost	Quantity	Cost
Mileage	$0.380	0	$0.00
Shipping	LSUM	0	$0.00
Meals	$26.00	0	$0.00
Lodging	$89.00	0	$0.00
Blueprints	$1.50	0	$0.00
Copies	$0.10	0	$0.00
Mylars	$3.50	0	$0.00
		TOTAL =	$0.00

AMERICAN STRUCTUREPOINT, INC.

Road Design - Manhour Justification

Project: Park East Blvd. - Storm Sewer Trunkline Design
Description: Rule 5 Permit

08-Oct-19

WORK CLASSIFICATION	ESTIMATED TIME (HOURS)				TOTAL
	Project Manager	Project Engineer	Staff Engineer	Senior Technician	
Prepare SWPPP Permit	4		16		20
Coordinate SWPPP Permit	2		2		4
Submittal to agencies	1		2		3
QC/QA Stormwater Pollution Prevention Plan	4		4		8
Coordinate and Prepare Advertisement	1	2			3
Develop NOI for submittal	1	4			5
Coordinate Rule 5 NOI	2	2			4
Submit Rule 5 Plans	2			2	4
Subtotal					**51**
TOTAL HOURS	17	8	24	2	51
WEIGHTED HOURLY RATE	$188.15	$114.46	$84.00	$117.12	
DIRECT SALARY COST	$3,198.55	$915.68	$2,016.00	$234.24	$6,364.47
DIRECT COSTS (See Below)					$250.00
TOTAL FEE					$6,614.47

	Unit Cost	Quantity	Cost
IDEM Permit Fee	$100.000	1	$100.00
Shipping	LSUM	1	$50.00
Meals	$26.00	0	$0.00
Advertisement	$100.00	1	$100.00
Blueprints	$1.50	0	$0.00
Copies	$0.10	0	$0.00
Mylars	$3.50	0	$0.00
		TOTAL =	$250.00

AMERICAN STRUCTUREPOINT, INC.

Road Design - Manhour Justification

Project: Park East Blvd. - Storm Sewer Trunkline Design
Description: Bidding Phase Services

08-Oct-19

WORK CLASSIFICATION	ESTIMATED TIME (HOURS) Project Manager	Senior Engineer	Project Engineer	Staff Engineer	Senior Technician	TOTAL
Bidding Phase Services						
Contract Book Preparation	8	4	0	0	0	
Pre-Bid Meeting	8	0	0	0	0	
Answer questions and Issue Addendums	8	4	0	2	0	
Attend Bid Opening	6	0	0	0	0	
Evaluation of Bids & Recommendation	6	3	0	0	0	
Subtotal						
TOTAL HOURS	36	11	0	2	0	49
WEIGHTED HOURLY RATE	$188.15	$140.91	$114.46	$84.00	$117.12	
DIRECT SALARY COST	$6,773.40	$1,550.01	$0.00	$168.00	$0.00	$8,491.41
DIRECT COSTS (See Below)						$76.00
TOTAL FEE						$8,567.41

	Unit Cost	Quantity	Cost
Mileage	$0.380	200	$76.00
Shipping	LSUM		$0.00
Meals	$26.00		$0.00
Lodging	$89.00		$0.00
Blueprints	$1.50		$0.00
Copies	$0.10		$0.00
Mylars	$3.50		$0.00
		TOTAL =	$76.00

AMERICAN STRUCTUREPOINT, INC.

Road Design - Manhour Justification

Project: Park East Blvd. - Storm Sewer Trunkline Design
Description: Construction Phase Design Services

08-Oct-19

WORK CLASSIFICATION	ESTIMATED TIME (HOURS) Project Manager	Senior Engineer	Project Engineer	Staff Engineer	Senior Technician	TOTAL
Post Design Services						
Shop Drawing Review	8	6				
Contract RFIs & Responses	8	8				
Subtotal						
TOTAL HOURS	16	14	0	0	0	30
WEIGHTED HOURLY RATE	$188.15	$140.91	$114.46	$84.00	$117.12	
DIRECT SALARY COST	$3,010.40	$1,972.74	$0.00	$0.00	$0.00	$4,983.14
DIRECT COSTS (See Below)						$0.00
TOTAL FEE						$4,983.14

	Unit Cost	Quantity	Cost
Mileage	$0.380		$0.00
Shipping	LSUM		$0.00
Meals	$26.00		$0.00
Lodging	$89.00		$0.00
Blueprints	$1.50		$0.00
Copies	$0.10		$0.00
Mylars	$3.50		$0.00
		TOTAL =	$0.00

CITY OF
LAFAYETTE

Engineering Department

20 North 6th Street • Lafayette, Indiana 47901-1412
Phone 765-807-1050 • FAX 765-807-1049

CHANGE ORDER #3 (FINAL)

The following change is authorized to the agreement dated, **July 31, 2018** for work performed on the **Manufacturer's Drive Project:**

Description of Change	Reason for Change	Change in Cost (+ / -)
Item 1: Sanitary sewer perma liner	**Change in Scope:** Contractor directed to do additional work at a joint in the sanitary sewer connection to an existing manhole. Cost split 50%/50% with the contractor.	**$ 1,600.00 +**

Contract Amount (Original)	$ 1,334,000.00
Contract Amount (Including CO#1 and #2)	**$ 1,356,041.31**
Net change	$ 1,600.00 +
Revised Contract Amount	**$ 1,357,641.31**

Signed: Jeromy L. Grenard Date: 1/16/2020
Jeromy L. Grenard, PE
City Engineer

Signed: See attached change order Date:
Milestone Contractors

Approved by the Board of Public Works and Safety on the 21st day of January, 2020.

_____
Gary Henriott, President

_____
Norm Childress, member

_____
Cindy Murray, member

_____
Amy Moulton, member

_____
Ron Shriner, member

ATTEST:

_____
Mindy Miller, 1st Deputy Clerk

Date: _____

CITY OF
LAFAYETTE

Engineering Department

20 North 6th Street • Lafayette, Indiana 47901-1412
Phone 765-807-1050 • FAX 765-807-1049

CHANGE ORDER #2 (FINAL)

The following change is authorized to the agreement dated, **February 13, 2018** for work performed on the **City Hall HVAC Upgrades – 2018** project:

Description of Change	Reason for Change	Change in Cost (+ / -)
Item 1: Demo old and install new IT server room CRAC unit	**Change in Scope:** Not a part of the original plans	**$ 22,763.00 +**
Item 1: Add'l valves and circuit setter to upper floor RTU's	**Change in Scope:** Not a part of the original plans	**$ 3,985.00 +**
Item 1: Repair chiller piping	**Change in Scope:** Not a part of the original plans	**$ 1,720.00 +**

Contract Amount (Original)	$	581,950.00
Contract Amount (Including CO#1)	$	592,580.00
Net change	$	28,468.00 +
Revised Contract Amount	**$**	**621,048.00**

Signed: Jeromy L. Grenard Date: 1/16/2020
Jeromy L. Grenard, PE
City Engineer

Signed: See attached change order Date: _____
D.A. Dodd

Approved by the Board of Public Works and Safety on the 21st day of January, 2020.

_____
Gary Henriott, President

_____
Norm Childress, member

_____
Cindy Murray, member

_____
Amy Moulton, member

_____
Ron Shriner, member

ATTEST:

_____
Mindy Miller, 1st Deputy Clerk

Date: _____

CHANGE ORDER FORM

No. 2

Project: **City Hall HVAC Upgrades - 2018**

Owner: **City of Lafayette**

To: DA Dodd
3416 Rascal Dr
Lafayette, IN 47909

You are hereby directed to make the following changes to the project scope of work as directed in the contract plans and specifications, reflecting subsequent additions and/or deductions to your contract amount and contract completion date.

Item	Scope Description	Increase	Decrease
1	Cost to demo existing CRAC unit and furnish and install a new CRAC unit per CP-2 dated 5-1-18.	$22,763.00	- CP-2
2	Cost for labor and material to install additional service valaves and an additional 1 1/2" circuit setter to the upper floor RTUs. Work to be performed on Saturday.	$3,985.00	- CP-9
3	Additional labor to repair piping on the chiller and re-insulate. Materials provided by Owner.	$1,720.00	- CP-11
	Net Change	$28,468.00	

Current Completion Date	Additional Time	Revised Completion Date
July 31, 2018	0 Calendar Days	July 31, 2018
Time added for Liebert unit installation	10 Working Days After receipt of unit.	

Recommended
TBIRD Design Services, Corp.

By: Lei Evans

Title: Contract Manager

Date: 7/18/18

Approved: City of Lafayette, IN
Board of Public Works & Safety

By: _____

_____

_____

_____

_____

Date: _____

Accepted:

DA Dodd

By: Brett Sanders

Title: Proj. Manager

Date: 7-30-18

Accepted:

City of Lafayette

By: Jimmy L. Brenard

Title: Director of Public Works and Safety

Date: 1/16/2020

D.A. DODD

CORPORATE OFFICE
14 E. Michigan Street
P.O. Box 430
Rolling Prairie, IN 46371
Phone (219) 778-4302
FAX (219) 778-2981

1251 Paw Paw Avenue
Benton Harbor, MI 49022
Phone (269) 926-7873
FAX (269) 926-7871

3416 Rascal Drive
Lafayette, IN 47909
Phone (765) 448-3405
FAX (765) 448-7955

2516 N. Home Street
Mishawaka, IN 46545
Phone (574) 968-0589
FAX (574) 968-0590

June 22, 2018

Primary Engineering, Inc.
3077 East 98th Street, Ste. 190
Indianapolis, Indiana 46280

Attention: Rob Christensen

Re: City Hall HVAC Upgrades - 2018
D.A. Dodd Job #LF18-006E CP-2
B003/16843 PR#1

Demo existing CRAC Unit and furnish & install new CRAC Unit per your request and specifications dated 5-1-18. Roughly 3 week lead time on the unit and another 3 weeks for install after approval. Please accept the cost of **Twenty-Two Thousand, Seven Hundred and Sixty-Three Dollars.**

Subtotal	$20,807.87
Mark Up	$1,955.13
Total	$22,763.00

If you have any questions on the above, please do not hesitate to contact me at 765/448-3405 or by email at brettsanders@dadodd.com.

Respectfully,

Brett Sanders

Attachment

cc: File
Field

D.A.DODD

Job Name: City Hall HVAC Upgrades - 2018

CP-2

D.A. Dodd Job LF18-006E

	Material			Labor	
Description	Quantity	Unit Price	Total	Labor Cost	Total Labor
Material					
	0	$0.00	$0.00	0	0
Unit demolition	1	$0.00	$0.00	24	24
New Leibert Unit w/5 Year Parts Warranty	1	$9,955.00	$9,955.00	24	24
Condensate Pump	1	$0.00	with unit	1	1
Insulated Line Set	1	$490.00	$490.00	16	16
Hanger Material	1	$95.00	$95.00	16	16
Condensate Pipe	1	$25.00	$25.00	2	2
	0	$0.00	$0.00	0	0
	0	$0.00	$0.00	0	0
	0	$0.00	$0.00	0	0
	0	$0.00	$0.00	0	0
	0	$0.00	$0.00	0	0
	0	$0.00	$0.00	0	0
	0	$0.00	$0.00	0	0
	0	$0.00	$0.00	0	0
	0	$0.00	$0.00	0	0
	0	$0.00	$0.00	0	0
	0	$0.00	$0.00	0	0
Crane Pick	1	$400.00	$400.00	0	0
	0	$0.00	$0.00	0	0
Temporary cooler	1	$779.87	$779.87	8	8
	0	$0.00	$0.00	0	0
	0	$0.00	$0.00	0	0
	0	$0.00	$0.00	0	0
	0	$0.00	$0.00	0	0
	0	$0.00	$0.00	0	0
	0	$0.00	$0.00	0	0
	0	$0.00	$0.00	0	0
Material Total			**$11,744.87**		
Subcontractors					
Sheet Metal - No Cost	1	$0.00	$0.00		0
Controls - No Cost	1	$0.00	$0.00		0
Insulation	1	$0.00	$0.00		0
Test and Balance - NA	1	$0.00	$0.00		0
Gen. Contractor - Traded out work	1	$0.00	$0.00		0
Service Start Up	1	$1,880.00	$1,880.00		0
Electric	1	$631.00	$631.00		0
			$0.00		0
			$0.00		0
Subcontractors Total			**$2,511.00**		91.00
				Labor Cost	$72.00
				Total Labor	$6,552.00

Sub Total	$20,807.87
10% Mark Up - Material	$1,174.49
5% Mark Up - Subs	$125.55
10% Mark Up - Labor	$655.20
Total	$22,763.11

	Indoor	16	Outdoor	8
Ceiling	Indoor	16	Outdoor	8

100' plus insulation

Set Up and demo

VERTIV.

FULLER
FULLER ENGINEERING COMPANY, LLC

4135 West 99th Street
Carmel, IN 46032
FAX: (317) 228-5810
PH: (317) 228-5800

COMPANY:	DA Dodd	**PROPOSAL #:**	Q02797894
ATTN:	Brett Sanders	**PAGES:**	7
FAX:		**DATE:**	Apr 30, 2018
FROM:	ROBERT NEELD		
PROJECT:	LAFAYETTE CITY HALL MM2-2797894		

We are pleased to provide our quotation for the following Liebert Mini-Mate2 system for your consideration on this project

One (1) 2 Ton Liebert Mini-Mate2 Precision Cooling System Model MMD24ENP00D3

- Each system will provide a total cooling capacity of 21.8 kBtuh and a sensible cooling capacity of 19.5 kBtuh at 75°F (24 °C), 45% RH.

Split System Evaporator

- Includes evaporator coil, filter drier, thermal expansion valve, two-speed direct drive internal blower, and microprocessor control with audible and visual alarms. Unit designed for R-407C and is field-charged.

One (1) Liebert Model PFH027A-PLN Prop Air Cooled Condensing Unit: 208/230 Volts 1 Phase 60Hz

- High head pressure switch
- Designed for R-407C and unit is field-charged
- Scroll Compressor
- Hot Gas Bypass

Factory Installed Features

- No Reheat
- Non-Locking Disconnect Switch
- Filter Clog Indicator
- High Temperature Sensor
- Smoke Sensor
- iCOM-CMS The iCOM CMS provides mobile cloud access, remote access to the unit level display via the world-wide web, and Building Management System (BMS) access via BACnet/Modbus IP and BACnet/Modbus 485. Unit-mounted enclosure and powered from the Mini-Mate evaporator

Ship-Loose Accessories

- One (1) Air Distribution Plenum(s) with MERV-8 Filter(s)
- One (1) 208/230 Volt Condensate Pump(s)

Services Included:

- Warranty Inspection Included
- 1st Year Limited Labor Warranty Included
- 2nd Through 5th Year Compressor Warranty Included

Parts Warranty:

- 2nd through 5th year parts warranty.....Add $925.00

Terms & Conditions:

- Quotation Valid for 45 days
- Price does not include tax
- Terms are Net 30 Days, subject to manufacturer's approval
- INFORMATION TO BUYER: This order between the Buyer and Seller is limited to Seller's Terms and Conditions located at http://termsconditions.vertivco.com/ unless a formal agreement governing this Purchase Order/transaction has been executed by the parties, in which case the Terms and Conditions of the signed agreement shall govern. Seller hereby objects to all Buyer's terms and conditions received by Seller and/or issued by Buyer.

- Please address Purchase Orders to:
Liebert Corporation c/o Fuller Engineering Company, LLC
1050 Dearborn Drive
Columbus, OH 43085

Total DA Dodd Price Including Freight but NOT TAX..... $9,030.00

5 year Parts Warranty.....Add $925.00

4.30.18

ROBERT NEELD
Account Representative

Liebert Corporation
TERMS AND CONDITIONS OF SALE

Liebert Corporation is herein referred to as the "Seller" and the customer or person or entity purchasing goods and/or services ("Goods") and/or licensing software and/or firmware, which are preloaded, or to be used with Goods ("Software") from Seller is referred to as the "Buyer." These Terms and Conditions, any price list or schedule, quotation, acknowledgment, Seller's scope or statement of work, or invoice from Seller relevant to the sale of the Goods and licensing of Software by Seller or its affiliate Avocent Corporation, and all associated terms, conditions and documents incorporated by specific reference herein or therein, constitute the complete and exclusive statement of the terms of the agreement governing the sale of Goods and/or license of Software by Seller to Buyer. Seller's acceptance of Buyer's purchase order is expressly conditional on Buyer's assent to all of Seller's terms and conditions of sale, including terms and conditions that are different from or additional to the terms and conditions of Buyer's purchase order. Buyer's acceptance of the Goods and/or Software will manifest Buyer's assent to these Terms and Conditions. Seller reserves the right in its sole discretion to refuse orders.

1. **PRICES**: Unless otherwise specified in writing by Seller, the price quoted or specified by Seller for the Goods and/or Software shall remain in effect for thirty (30) days after the date of Seller's quotation provided an unconditional authorization from Buyer for the shipment of the Goods and/or Software is received and accepted by Seller within such time period. If such authorization is not received by Seller within such thirty (30) day period, Seller shall have the right to change the price for the Goods and/or Software to Seller's price for the Goods and/or Software at the time of shipment. All prices and licensee fees are exclusive of taxes, transportation and insurance, which are to be borne by Buyer. Unless otherwise specified by Seller, parts ("Parts") that are required for the performance of services will be furnished at Seller's then prevailing prices. Seller assigns to Buyer any warranties which are made by manufacturers and suppliers of Parts and which are assignable. Except as specified above, Parts furnished hereunder are furnished AS IS, WHERE IS, WITH NO WARRANTY WHATSOEVER.

2. **TAXES**: Any current or future tax or governmental charge (or increase in same) affecting Seller's costs of production, sale, or delivery or shipment, or which Seller is otherwise required to pay or collect in connection with the sale, purchase, delivery, storage, processing, use or consumption of Goods, Parts, and/or Software, shall be for Buyer's account and shall be added to the price or billed to Buyer separately, at Seller's election.

3. **TERMS OF PAYMENT**: Unless otherwise specified by Seller, terms are net thirty (30) days from date of Seller's invoice in U.S. currency. Seller shall have the right, among other remedies, either to terminate this agreement or to suspend further performance under this and/or other agreements with Buyer in the event Buyer fails to make any payment when due, which other agreements Buyer and Seller hereby amend accordingly. Buyer shall be liable for all expenses, including attorneys' fees, relating to the collection of past due amounts. If any payment owed to Seller is not paid when due, it shall bear interest, at a rate to be determined by Seller, which shall not exceed the maximum rate permitted by law, from the date on which it is due until it is paid. Should Buyer's financial responsibility become unsatisfactory to Seller, cash payments or security satisfactory to Seller may be required by Seller for future deliveries of Goods and/or Software. If such cash payment or security is not provided, in addition to Seller's other rights and remedies, Seller may discontinue deliveries. Buyer hereby grants Seller a security interest in all Goods and/or Software sold to Buyer by Seller, which security interest shall continue until all such Goods and/or Software are fully paid for, and Buyer, upon Seller's demand, will execute and deliver to Seller such instruments as Seller requests to protect and perfect such security interest. All purchases paid by credit card shall be charged a 2.0% usage surcharge of the invoice total, for fees paid by Seller to accept credit card transactions.

4. **SHIPMENT AND DELIVERY**: While Seller will use all reasonable commercial efforts to maintain the delivery date(s) and/or performance dates acknowledged or quoted by Seller, all shipping dates and/or performance dates are approximate and not guaranteed. Seller reserves the right to make partial shipments. Seller, at its option, shall not be bound to tender delivery of any Goods, Parts, and/or Software for which Buyer has not provided shipping instructions and other required information. If the shipment of the Goods, Parts, and/or Software is postponed or delayed by Buyer for any reason, Buyer agrees to reimburse Seller for any and all storage costs and other additional expenses resulting therefrom. For sales in which the end destination of the Goods, Parts, and/or Software is outside of the United States (except for those international sales to Seller's affiliated companies), risk of loss and legal title to the Goods, Parts, and/or Software shall transfer to Buyer immediately after the Goods, Parts, and/or Software have passed beyond the territorial limits of the United States. For international sales to Seller's affiliated companies, all shipments of Goods, Parts, and/or Software are made on a Delivered at Terminal (DAT) basis, per Incoterms 2010, with freight charges from Seller's facility to destination terminal invoiced to buyer either on a Prepaid or PPDAdd basis, as agreed to by Seller and Buyer. All other shipments of Goods, Parts, and/or Software are made on an Ex Works (EXW) Seller's Shipping Point basis, per Incoterms 2010, with Seller responsible to load goods on Buyer's nominated vehicle. Any claims for shortages or damages suffered in transit are the responsibility of Buyer and shall be submitted by Buyer directly to the carrier. Shortages or damages must be identified and signed for at the time of delivery.

5. **LIMITED WARRANTY**: Subject to the limitations of Section 6, Seller's standard warranty that is applicable to the Goods and/or Software at the time of purchase is the only warranty applicable to the sale of Seller's Goods and/or Software and its terms, conditions and limitations are incorporated by reference herein. **THE WARRANTY SET FORTH IN THIS SECTION 5 AND THE WARRANTY SET FORTH IN SECTION 8 ARE THE SOLE AND EXCLUSIVE WARRANTIES GIVEN BY SELLER WITH RESPECT TO THE GOODS AND/OR SOFTWARE AND ARE IN LIEU OF AND EXCLUDE ALL OTHER WARRANTIES, EXPRESS OR IMPLIED, ARISING BY OPERATION OF LAW OR OTHERWISE, INCLUDING WITHOUT LIMITATION, MERCHANTABILITY AND FITNESS FOR A PARTICULAR PURPOSE WHETHER OR NOT THE PURPOSE OR USE HAS BEEN DISCLOSED TO SELLER IN SPECIFICATIONS, DRAWINGS OR OTHERWISE, AND WHETHER OR NOT SELLER'S PRODUCTS ARE SPECIFICALLY DESIGNED AND/OR MANUFACTURED BY SELLER FOR BUYER'S USE OR PURPOSE.**

SELLER'S WARRANTY EXTENDS ONLY TO PURCHASERS WHO BUY FOR INDUSTRIAL OR COMMERCIAL USE. This warranty does not extend to any losses or damages due to misuse, accident, abuse, neglect, normal wear and tear, negligence (other than Seller's), unauthorized modification or alteration, use beyond rated capacity, unsuitable power sources or environmental conditions, improper installation, repair, handling, maintenance or application or any other cause not the fault of Seller. To the extent that Buyer or its agents have supplied specifications, information, representation of operating conditions or other data to Seller in the selection or design of the Goods and/or Software and the preparation of Seller's quotation, and in the event that actual operating conditions or other conditions differ from those represented by Buyer, any warranties or other provisions contained herein that are affected by such conditions shall be null and void. Buyer assumes all other responsibility for any loss, damage, or injury to persons or property arising out of, connected with, or resulting from the use of Goods and/or Software, either alone or in combination with other products/components.

6. **LIMITATION OF REMEDY AND LIABILITY**: **THE SOLE AND EXCLUSIVE REMEDY FOR BREACH OF ANY WARRANTY HEREUNDER (OTHER THAN THE WARRANTY PROVIDED UNDER SECTION 8) SHALL BE LIMITED TO REPAIR, CORRECTION OR REPLACEMENT, OR REFUND OF THE PURCHASE PRICE UNDER SECTION 5. SELLER SHALL NOT BE LIABLE FOR DAMAGES CAUSED BY DELAY IN PERFORMANCE AND THE REMEDIES OF BUYER SET FORTH IN THIS AGREEMENT ARE EXCLUSIVE. IN NO EVENT, REGARDLESS OF THE FORM OF THE CLAIM OR CAUSE OF ACTION (WHETHER BASED IN CONTRACT, INFRINGEMENT, NEGLIGENCE, STRICT LIABILITY, OTHER TORT OR OTHERWISE), SHALL SELLER'S LIABILITY TO BUYER AND/OR ITS CUSTOMERS EXCEED THE PRICE PAID BY BUYER FOR THE SPECIFIC GOODS, PARTS, AND/OR SOFTWARE PROVIDED BY SELLER GIVING RISE TO THE CLAIM OR CAUSE OF ACTION.**

BUYER AGREES THAT SELLER'S LIABILITY TO BUYER AND/OR ITS CUSTOMERS SHALL NOT EXTEND TO INCLUDE INCIDENTAL, CONSEQUENTIAL OR PUNITIVE DAMAGES. The term "consequential damages" shall include, but not be limited to, loss of anticipated profits, business interruption, loss of use, revenue, reputation and data, costs incurred, including without limitation, for capital, fuel, power and loss or damage to property or equipment. It is expressly understood that any technical advice furnished by Seller with respect to the use of the Goods and/or Software is given without charge, and Seller assumes no obligation or liability for the advice given, or results obtained, all such advice being given and accepted at Buyer's risk.

7. **INSURANCE**: Seller shall maintain the following insurance or self-insurance coverage: **Worker's Compensation** in accordance with the statutory requirements of the state in which the work is performed; **Employer's Liability** with a limit of liability of $2,000,000 per occurrence for bodily injury by accident or bodily injury by disease. **Commercial General Liability (CGL)** for bodily injury and property damage with a limit of $2,000,000 per occurrence and aggregate. CGL includes Contractual Liability. CGL does not include Products and Completed Operations coverage, which is self-insured. **Automobile Liability** insurance that covers usage of all owned, non-owned and leased vehicles and which is subject to a combined single limit per occurrence of $2,000,000. Automobile Liability insurance includes Contractual Liability, but no special endorsements. **Buyer expressly acknowledges and agrees that Seller has set its prices and entered into this Agreement in reliance upon the limitations of liability, insurance coverage, and other terms and conditions specified herein, which allocate the risk between Seller and Buyer and form a basis of this bargain between the parties.**

8. **PATENTS AND COPYRIGHTS**: Subject to the limitations of the second paragraph of Section 6, Seller warrants that the Goods and/or Software sold, except as are made specifically for Buyer according to Buyer's specifications, do not infringe any valid U.S. patent or copyright in existence as of the date of shipment. This warranty is given upon the condition that Buyer promptly notify Seller of any claim or suit involving Buyer in which such infringement is alleged and cooperate fully with Seller and permit Seller to control completely the defense, settlement or compromise of any such allegation of infringement. Seller's warranty as to utility patents only applies to infringement arising solely out of the inherent operation according to Seller's specifications and instructions of such Goods and/or Software. In the event (i) such Goods and/or Software are held to infringe such a U.S. patent or copyright in such suit, and the use of such Goods and/or Software is enjoined, or (ii) a compromise or settlement is made by Seller, Seller shall have the right, at its option and expense, to procure for Buyer the right to continue using such Goods and/or Software, or replace them with non-infringing Goods and/or Software, or modify same to become non-infringing, or grant Buyer a credit for the depreciated value of such Goods and/or Software and accept return of them. In the event of the foregoing, Seller may also, at its option, cancel the agreement as to future deliveries of such Goods and/or Software, without liability.

9. **EXCUSE OF PERFORMANCE**: Seller shall not be liable for delays in performance or for non-performance due to acts of God; acts of Buyer; war; epidemic; fire; flood; weather; sabotage; strikes or labor disputes; civil disturbances or riots; governmental requests, restrictions, allocations, laws, regulations, orders or actions; unavailability of or delays in transportation; default of suppliers; or unforeseen circumstances or any events or causes beyond Seller's reasonable control. Deliveries or other performance may be suspended for an appropriate period of time or corrected by Seller upon notice to Buyer in the event of any of the foregoing, but the balance of the agreement shall otherwise remain unaffected as a result of the foregoing. If Seller determines that its ability to supply the total demand for the Goods, Parts, and/or Software, or to obtain material used directly or indirectly in the manufacture of the Goods, Parts, and/or Software, is hindered, limited or made impracticable due to causes set forth in the preceding paragraph, Seller may allocate its available supply of the Goods, Parts, Software, and/or such material (without obligation to acquire other supplies of any such Goods, Parts, Software, or material) among its purchasers on such basis as Seller determines to be equitable without liability for any failure of performance which may result therefrom.

10. **CANCELLATION**: Buyer may cancel orders only upon reasonable advance written notice and upon payment to Seller of Seller's cancellation charges which include, among other things, all costs and expenses incurred, and, to cover commitments made, by the Seller and a reasonable profit thereon. Seller's determination of such cancellation charges shall be conclusive.

11. **CHANGES**: Buyer may request changes or additions to the Goods and/or Software consistent with Seller's specifications and criteria. In the event such changes or additions are accepted by Seller, Seller may revise the price, license fees, and dates of delivery and/or performance dates. Seller reserves the right to change designs and specifications for the Goods, Parts, and/or Software without prior notice to Buyer, except with respect to Goods and/or Software being made-to-order for Buyer. Seller shall have no obligation to install or make such change in any Goods and/or Software manufactured prior to the date of such change.

12. **NUCLEAR/MEDICAL**: GOODS, PARTS, AND SOFTWARE SOLD HEREUNDER ARE NOT FOR USE IN CONNECTION WITH ANY NUCLEAR, MEDICAL, LIFE-SUPPORT AND RELATED APPLICATIONS. Buyer accepts Goods, Parts, and Software with the foregoing understanding. Agrees to communicate the same in writing to any subsequent purchasers or users and to defend, indemnify and hold harmless Seller from any claims, losses, suits, judgments and damages, including incidental and consequential damages, arising from such use, whether the cause of action be based in tort, contract or otherwise, including allegations that the Seller's liability is based on negligence or strict liability.

13. **ASSIGNMENT**: Buyer shall not assign its rights or delegate its duties hereunder or any interest herein without the prior written consent of Seller, and any such assignment, without such consent, shall be void.

14. **SOFTWARE**: Notwithstanding any other provision herein to the contrary, Seller or applicable third party licensor to Seller shall retain all rights of ownership and title in its respective Software, including without limitation all rights of ownership and title in its respective copies of such Software. Except as otherwise provided herein, Buyer is hereby granted a nonexclusive, non-transferable royalty free license to use the Software incorporated into the Goods solely for purposes of Buyer properly utilizing such Goods purchased from Seller. All other Software shall be furnished to, and used by, Buyer only after execution of Seller's (or the licensor's) applicable standard license agreement, the terms of which are incorporated herein by reference.

15. **TOOLING**: Tool, die, and pattern charges, if any, are in addition to the price of the Goods and are due and payable upon completion of the tooling. All such tools, dies and patterns shall be and remain the property of Seller. Charges for tools, dies, and patterns do not convey to Buyer, title, ownership interest in, or rights to possession or removal, or prevent their use by Seller for other purchasers, except as otherwise expressly provided by Seller and Buyer in writing with reference to this provision.

16. **DOCUMENTATION**: Seller shall provide Buyer with that data/documentation which is specifically identified in Seller's quotation. If additional copies of data/documentation are to be provided by Seller, it shall be provided to Buyer at Seller's applicable prices then in effect.

17. **INSPECTION/TESTING**: Buyer, at its option and expense, may observe the inspection and testing by Seller of the Goods and/or Software for compliance with Seller's standard test procedures prior to shipment, which inspection and testing shall be conducted at Seller's plant at such reasonable time as is specified by Seller. Any rejection of the Goods and/or Software must be made promptly by Buyer before shipment. Tests shall be deemed to be satisfactorily completed and the test fully met when the Goods and/or Software meet Seller's criteria for such procedures. If Buyer does not inspect the Goods and/or Software at Seller's plant as provided herein, Buyer shall have ten (10) days from (i) the date of delivery of goods and/or Software and (ii) from the date of completion of each portion of the services to inspect the Goods and/or Software, and in the event of any non-conformity, Buyer must give written notice to Seller within said period stating why the Goods and/or Software are not conforming. Failure by Buyer to give such notice constitutes unqualified acceptance of the Goods and/or Software. Buyer's sole remedy for non-conforming services shall be correct performance of services incorrectly performed by Seller.

18. **RETURNED GOODS**: Advance written permission to return Goods and/or Software must be obtained from Seller in accordance with Seller's then current Return Material Authorization (RMA) procedures and a return authorization number issued. Such Goods and/or Software must be (i) current, unused Goods and/or Software, (ii) free of all liens, encumbrances, or other claims, and (iii) shipped, transportation prepaid, to Seller's specified location. Returns made without proper written permission will not be accepted by Seller. Seller reserves the right to inspect Goods and/or Software prior to authorizing return.

19. **BILLABLE SERVICES**: Additional charges will be billed to Buyer at Seller's then prevailing labor rates and Parts prices for any of the following: a) any services not specified in Seller's quotation, Seller's order acknowledgement, or other documents referenced herein and therein; b) any services performed at times other than Seller's normal service hours; c) if reasonable site and/or equipment access is denied the Seller service representative; and d) if it is necessary, due to local circumstances, to use union labor or hire an outside contractor. Seller service personnel will provide supervision only and the cost of such union or contract labor will be charged to Buyer.

20. **DRAWINGS**: Seller's prints and drawings (including without limitation, the underlying technology) furnished by Seller to Buyer in connection with this agreement are the property of Seller and Seller retains all rights, including without limitation, exclusive rights of use, licensing and sale. Possession of such prints or drawings does not convey to Buyer any rights or license, and Buyer shall return all copies (in whatever medium) of such prints or drawings to Seller immediately upon request therefor.

21. **BUYER SUPPLIED DATA**: To the extent that Seller has been provided by, or on behalf of, Buyer any specifications, description of operating conditions or other data and information in connection with the selection or design of the Goods and/or Software, and/or the provision of Services, and the actual operating conditions or other circumstances differ from those provided by Buyer and relied upon by Seller, any warranties or other provisions contained herein which are affected by such conditions shall be null and void.

22. **EXPORT/IMPORT**: Buyer agrees that all applicable import and export control laws, regulations, orders and requirements, including without limitation those of the United States and the European Union, and the jurisdictions in which the Seller and Buyer are established or from which Goods, Parts, Software, and Services may be supplied, will apply to their receipt and use. In no event shall Buyer use, transfer, release, import, export, Goods, Parts, or Software in violation of such applicable laws, regulations, orders or requirements.

23. **NON-SOLICITATION**: Buyer shall not solicit, directly or indirectly, or employ any employee of Seller during the period any Goods are being provided to Buyer and for a period of one (1) year after the last provision of Goods.

24. **GENERAL PROVISIONS**: These terms and conditions supersede all other communications, negotiations and prior oral or written statements regarding the subject matter of these terms and conditions. No change, modification, rescission, discharge, abandonment, or waiver of these terms and conditions shall be binding upon the Seller unless made in writing and signed on its behalf by a duly authorized representative of Seller. No conditions, usage of trade, course of dealing or performance, understanding or agreement purporting to modify, vary, explain, or supplement these terms and conditions shall be binding unless hereafter made in writing and signed by the party to be bound, and no modification or additional terms shall be applicable to this agreement by Seller's receipt, acknowledgment, or acceptance of purchase orders, shipping instructions forms, or other documentation containing terms at variance with or in addition to those set forth herein. Any such modifications or additional terms are specifically rejected and deemed a material alteration hereof. If this document shall be deemed an acceptance of a prior offer by Buyer, such acceptance is expressly conditional upon Buyer's assent to any additional or different terms set forth herein. No waiver by either party with respect to any breach or default or of any right or remedy, and no course of dealing, shall be deemed to constitute a continuing waiver of any other breach or default or of any other right or remedy, unless such waiver be expressed in writing and signed by the party to be bound. All typographical or clerical errors made by Seller in any quotation, acknowledgment or publication are subject to correction.

The validity, performance, and all other matters relating to the interpretation and effect of this agreement shall be governed by the law of the state of Ohio without regard to its conflict of laws principles. Buyer and Seller agree that the proper venue for all actions arising in connection herewith shall be only in Ohio and the parties agree to submit to such jurisdiction. No action, regardless of form, arising out of transactions relating to this contract, may be brought by either party more than two (2) years after the cause of action has accrued. The U.N. Convention on Contracts for the International Sales of Goods shall not apply to this agreement.

25. **INDEMNITY**: Each party shall indemnify and hold the other party harmless from loss, damage, liability or expense resulting from damage to personal property of a third party, or injuries, including death, to third parties to the extent caused by a negligent act or omission of the party providing indemnification or a party's subcontractors, agents or employees during performance of services hereunder. Such indemnification shall be reduced to the extent damage or injuries are attributable to others. The indemnifying party shall defend the other party in accordance with and to the extent of the above indemnification, provided that the indemnifying party is: i) promptly notified by the other party, in writing, of any claims, demands or suits for such damages or injuries; ii) given all reasonable information and assistance by the other party; iii) given full control over any resulting negotiation, arbitration or litigation, including the right to choose counsel and settle claims, or the indemnifying party's obligations herein shall be deemed waived.

Liebert Corp Terms & Conditions Rev 2016

LIMITED WARRANTY FOR THERMAL MANAGEMENT PRODUCTS

Warrantor: Liebert Corporation (referred to herein as "Liebert") offers the following **One-Year Limited Warranty Against Defects in Material and Workmanship ("Warranty")** for applicable Product.

Products Covered:

- Liebert Thermal Management Products

Terms of Limited Warranty:

As provided herein, Liebert warrants that during the Warranty Period (as defined below) the Product:

- is free of defects in material and workmanship; and
- conforms to the descriptions contained in any applicable certified drawings for such Product, to Liebert's final invoices, and to applicable Liebert Product brochures and manuals current as of the date of Product shipment ("Descriptions")

Warranty Period: a period of one (1) year from a valid, documented Product warranty inspection performed by Liebert personnel, which period shall expire no later than eighteen (18) months from the Product shipment date. Product shipment date is determined only from the bill of lading. If Product warranty inspection is not performed, the Warranty Period is thirteen (13) months from the date of purchase by the original end-user.

If any part or portion of the Liebert Product fails to conform to the Warranty within the Warranty Period, Liebert, at its option, will furnish new or factory remanufactured Products for repair or replacement of that failed portion or part. REPAIR OR REPLACEMENT OF A DEFECTIVE PRODUCT OR PART THEREOF DOES NOT EXTEND OR RESTART THE ORIGINAL WARRANTY PERIOD. Liebert does not control the use of any Product and, accordingly, materials classified as "Descriptions" are NOT WARRANTIES OF PERFORMANCE and NOT WARRANTIES OF FITNESS FOR A PARTICULAR PURPOSE.

Who is Covered:

This Warranty extends to the **original end-user** (the "User") and only within the fifty states of the USA and Canada. This Warranty is not transferable or assignable without the prior written permission of Liebert. This Warranty is given ONLY to purchasers who buy for commercial or industrial use in the ordinary course of business. Liebert assigns to User any warranties which are made by manufacturers and suppliers of components of, or accessories to, the Liebert Product and which are assignable, but Liebert makes NO REPRESENTATIONS as to the effectiveness or extent of such warranties, assumes NO RESPONSIBILITY for any matters which may be warranted by such manufacturers or suppliers and extends no coverage under this Warranty to such components or accessories.

Warranty Claims Procedure and Services:

Within thirty (30) days after User's discovery of a defect, User must contact their local Liebert representative and provide all material information relating to such alleged defect. User may contact Liebert at (800) 543-2378 for local Liebert representative information.

Liebert, in its sole discretion, shall either repair or replace defective Products. User shall bear all labor or shipping charges associated with de-installation, shipment and transportation of the returned Product and the transportation and installation of the Product replaced under warranty. Warranty coverage will be extended only after Liebert or its representative's inspection discloses the claimed defect and shows no signs of treatment or use that would void the coverage of this Warranty. All defective Products and parts thereof replaced under this Warranty become the property of Liebert.

Items Not Covered:

THIS WARRANTY DOES NOT COVER DAMAGE OR DEFECT CAUSED BY misuse, improper application, wrong or inadequate electrical current or connection, inadequate water or drain services, negligence, inappropriate on site operating conditions, repair by non-Liebert designated personnel, accident in transit, tampering, alterations, a change in location or operating use, exposure to the elements, Acts of God, theft or installation contrary to Liebert's recommendations or specifications, or in any event if the Liebert serial number has been altered, defaced, or removed.

THIS WARRANTY DOES NOT COVER shipping costs, Product installation/removal costs, travel costs, external circuit breaker resetting, loss of refrigerant, maintenance or service items and further, except as may be provided herein, does NOT include labor costs or transportation, arising from the replacement of the Liebert Product or any part thereof or charges to remove or reinstall same at any premises of User, nor for site inspections that determine no corrective action was required nor any other services not expressly provided for by the terms of the Warranty. Consumables, including but not limited to air filters, are not covered by this Warranty. Drive packages and heat exchangers in certain Thermal Management Products are warranted separately.

THIS WARRANTY IS VOID UPON THE FOLLOWING: (1) the Product having been stored in an unsuitable environment after Product shipment and/or (2) if applicable, Product warranty inspection performed by a third party other than Liebert and/or its authorized representatives. No salesperson, employee or agent of Liebert is authorized to add to or vary the terms of this Warranty. Liebert retains the right to cancel the Warranty, subject to reinstatement at Liebert's sole discretion, for late- or non-payment of the Product purchase price and any other amounts due. Warranty terms may only be modified, if at all, if in writing and signed by a Liebert officer.

Other Limitations:

THIS LIMITED WARRANTY IS IN LIEU OF AND EXCLUDES ALL OTHER WARRANTIES, EXPRESS OR IMPLIED, INCLUDING MERCHANTABILITY AND FITNESS FOR A PARTICULAR PURPOSE. USER'S SOLE AND EXCLUSIVE REMEDY IS REPAIR OR REPLACEMENT OF THE LIEBERT PRODUCT AS SET FORTH HEREIN. IF USER'S REMEDY IS DEEMED TO FAIL OF ITS ESSENTIAL PURPOSE BY A COURT OF COMPETENT JURISDICTION, LIEBERT'S RESPONSIBILITY FOR PROPERTY LOSS OR DAMAGE SHALL NOT EXCEED THE NET PRODUCT PURCHASE PRICE. IN NO EVENT SHALL LIEBERT ASSUME ANY LIABILITY FOR INDIRECT, SPECIAL, INCIDENTAL, CONSEQUENTIAL OR EXEMPLARY DAMAGES OF ANY KIND WHATSOEVER, INCLUDING WITHOUT LIMITATION LOST PROFITS, BUSINESS INTERRUPTION OR LOSS OF DATA, WHETHER ANY CLAIM IS BASED UPON THEORIES OF CONTRACT, NEGLIGENCE, STRICT LIABILITY, TORT, OR OTHERWISE. THE PRODUCTS LISTED IN THIS WARRANTY ARE NOT FOR USE IN CONNECTION WITH ANY NUCLEAR, MEDICAL, LIFE-SUPPORT AND RELATED APPLICATIONS.

OPTIONAL LIMITED WARRANTY FOR THERMAL MANAGEMENT PRODUCTS

Warrantor: Liebert Corporation (referred to herein as "Liebert") offers the following **Optional Limited Warranty Against Defects in Material and Workmanship** ("**Warranty**") for applicable Product.

Products Covered:

- Compressors contained in Liebert™ Thermal Management Products

Terms of Limited Warranty:

As provided herein, Liebert warrants that during the Warranty Period (as defined below) the Product:

- is free of defects in material and workmanship; and
- conforms to the descriptions contained in any applicable certified drawings for such Product, to Liebert's final invoices, and to applicable Liebert Product brochures and manuals current as of the date of Product shipment ("Descriptions")

Warranty Period: a period of ( ) one (_) two ( ) three (_) four years after the expiration of the One Year Limited Warranty Against Defects in Material and Workmanship.

If any part or portion of the Liebert Product fails to conform to the Warranty within the Warranty Period, Liebert, at its option, will furnish new or factory remanufactured Products for repair or replacement of that failed portion or part. REPAIR OR REPLACEMENT OF A DEFECTIVE PRODUCT OR PART THEREOF DOES NOT EXTEND OR RESTART THE ORIGINAL WARRANTY PERIOD. Liebert does not control the use of any Product and, accordingly, materials classified as "Descriptions" are NOT WARRANTIES OF PERFORMANCE and NOT WARRANTIES OF FITNESS FOR A PARTICULAR PURPOSE.

Who Is Covered:

This Warranty extends to the **original end-user** (the "User") and only within the fifty states of the USA and Canada. This Warranty is not transferable or assignable without the prior written permission of Liebert. This Warranty is given ONLY to purchasers who buy for commercial or industrial use in the ordinary course of business. Liebert assigns to User any warranties which are made by manufacturers and suppliers of components of, or accessories to, the Liebert Product and which are assignable, but Liebert makes NO REPRESENTATIONS as to the effectiveness or extent of such warranties, assumes NO RESPONSIBILITY for any matters which may be warranted by such manufacturers or suppliers and extends no coverage under this Warranty to such components or accessories.

Warranty Claims Procedure and Services:

Within thirty (30) days after User's discovery of a defect, User must contact their local Liebert representative and provide all material information relating to such alleged defect. User may contact Liebert at (800) 543-2378 for local Liebert representative information.

Liebert, in its sole discretion, shall either repair or replace defective Products. User shall bear all labor or shipping charges associated with de-installation, shipment and transportation of the returned Product and the transportation and installation of the Product replaced under warranty. Warranty coverage will be extended only after Liebert or its representative's inspection discloses the claimed defect and shows no signs of treatment or use that would void the coverage of this Warranty. All defective Products and parts thereof replaced under this Warranty become the property of Liebert.

Items Not Covered:

THIS WARRANTY DOES NOT COVER DAMAGE OR DEFECT CAUSED BY misuse, improper application, wrong or inadequate electrical current or connection, inadequate water or drain services, negligence, inappropriate on site operating conditions, repair by non-Liebert designated personnel, accident in transit, tampering, alterations, a change in location or operating use, exposure to the elements, Acts of God, theft or installation contrary to Liebert's recommendations or specifications, or in any event if the Liebert serial number has been altered, defaced, or removed.

THIS WARRANTY DOES NOT COVER shipping costs, Product installation/removal costs, travel costs, external circuit breaker resetting, loss of refrigerant, maintenance or service items and further, except as may be provided herein, does NOT include labor costs or transportation, arising from the replacement of the Liebert Product or any part thereof or charges to remove or reinstall same at any premises of User, nor for site inspections that determine no corrective action was required nor any other services not expressly provided for by the terms of the Warranty. Consumables, including but not limited to air filters, are not covered by this Warranty. Non-compressor related parts are warranted separately.

THIS WARRANTY IS VOID UPON THE FOLLOWING: (1) the Product having been stored in an unsuitable environment after Product shipment and/or (2) if applicable, Product warranty inspection performed by a third party other than Liebert and/or its authorized representatives. No salesperson, employee or agent of Liebert is authorized to add to or vary the terms of this Warranty. Liebert retains the right to cancel the Warranty, subject to reinstatement at Liebert's sole discretion, for late- or non-payment of the Product purchase price and any other amounts due. Warranty terms may only be modified, if at all, if in writing and signed by a Liebert officer.

Other Limitations:

THIS LIMITED WARRANTY IS IN LIEU OF AND EXCLUDES ALL OTHER WARRANTIES, EXPRESS OR IMPLIED, INCLUDING MERCHANTABILITY AND FITNESS FOR A PARTICULAR PURPOSE. USER'S SOLE AND EXCLUSIVE REMEDY IS REPAIR OR REPLACEMENT OF THE LIEBERT PRODUCT AS SET FORTH HEREIN. IF USER'S REMEDY IS DEEMED TO FAIL OF ITS ESSENTIAL PURPOSE BY A COURT OF COMPETENT JURISDICTION, LIEBERT'S RESPONSIBILITY FOR PROPERTY LOSS OR DAMAGE SHALL NOT EXCEED THE NET PRODUCT PURCHASE PRICE. IN NO EVENT SHALL LIEBERT ASSUME ANY LIABILITY FOR INDIRECT, SPECIAL, INCIDENTAL, CONSEQUENTIAL OR EXEMPLARY DAMAGES OF ANY KIND WHATSOEVER, INCLUDING WITHOUT LIMITATION LOST PROFITS, BUSINESS INTERRUPTION OR LOSS OF DATA, WHETHER ANY CLAIM IS BASED UPON THEORIES OF CONTRACT, NEGLIGENCE, STRICT LIABILITY, TORT, OR OTHERWISE. THE PRODUCTS LISTED IN THIS WARRANTY ARE NOT FOR USE IN CONNECTION WITH ANY NUCLEAR, MEDICAL, LIFE-SUPPORT AND RELATED APPLICATIONS.

OPTIONAL LIMITED WARRANTY FOR THERMAL MANAGEMENT PRODUCTS

Warrantor: Liebert Corporation (referred to herein as "Liebert") offers the following **Optional Limited Warranty Against Defects in Material and Workmanship ("Warranty")** for applicable Product.

Products Covered:

- Liebert™ Thermal Management Products-First Year Limited Labor Warranty

Terms of Limited Warranty:

As provided herein, Liebert warrants that during the Warranty Period (as defined below):

- Liebert, at its option, will provide labor support pursuant to the terms below.
- Liebert Warranty inspection allowance must be sold with this Warranty, and the Warranty inspection information must be submitted through the local Liebert representative to Liebert Product Support.

Warranty Period: a period of one (1) year from a valid, documented Product warranty inspection performed by Liebert personnel, which period shall expire no later than eighteen (18) months from the Product shipment date.

Who Is Covered:

This Warranty extends to the **original end-user** (the "User") and only within the fifty states of the USA and Canada. This Warranty is not transferable or assignable without the prior written permission of Liebert. This Warranty is given ONLY to purchasers who buy for commercial or industrial use in the ordinary course of business. Liebert assigns to User any warranties which are made by manufacturers and suppliers of components of, or accessories to, the Liebert Product and which are assignable, but Liebert makes NO REPRESENTATIONS as to the effectiveness or extent of such warranties, assumes NO RESPONSIBILITY for any matters which may be warranted by such manufacturers or suppliers and extends no coverage under this Warranty to such components or accessories.

Warranty Claims Procedure and Services:

Within thirty (30) days after User's discovery of a defect, User must contact their local Liebert representative to obtain pre-authorization from Liebert Product Support and provide all material information relating to such alleged defect. User may contact Liebert at (800) 543-2378 for local Liebert representative information.

Subject to Product Warranty Inspection and the other limitations specified herein, a Liebert field service representative will repair the non-conforming Liebert Product warranted hereunder, without charge for limited labor. Warranty coverage will be extended only after Liebert's inspection confirms the claimed defect and shows no signs of treatment or use voiding the coverage of this Warranty. All defective Products and component parts replaced under this Warranty become the property of Liebert. Liebert may utilize third parties in the performance of Warranty work, including repair or replacement hereunder, where, in Liebert's opinion, such work can be performed in less time, with less expense, or in closer proximity to the Liebert Product.

Items Not Covered:

THIS WARRANTY DOES NOT COVER DAMAGE OR DEFECT CAUSED BY misuse, improper application, wrong or inadequate electrical current or connection, inadequate water or drain services, negligence, inappropriate on site operating conditions, repair by non-Liebert designated personnel, accident in transit, tampering, alterations, a change in location or operating use, exposure to the elements, Acts of God, theft or installation contrary to Liebert's recommendations or specifications, or in any event if the Liebert serial number has been altered, defaced, or removed.

THIS WARRANTY DOES NOT COVER shipping costs, travel costs, external circuit breaker resetting, or loss of refrigerant, maintenance or service items.

THIS WARRANTY IS VOID UPON THE FOLLOWING: (1) the Product having been stored in an unsuitable environment after Product shipment and/or (2) if applicable, Product warranty inspection performed by a third party other than Liebert and/or its authorized representatives. No salesperson, employee or agent of Liebert is authorized to add to or vary the terms of this Warranty. Liebert retains the right to cancel the Warranty, subject to reinstatement at Liebert's sole discretion, for late- or non-payment of the Product purchase price and any other amounts due. Warranty terms may only be modified, if at all, if in writing and signed by a Liebert officer.

Other Limitations:

THIS LIMITED WARRANTY IS IN LIEU OF AND EXCLUDES ALL OTHER WARRANTIES, EXPRESS OR IMPLIED, INCLUDING MERCHANTABILITY AND FITNESS FOR A PARTICULAR PURPOSE. USER'S SOLE AND EXCLUSIVE REMEDY IS REPAIR OR REPLACEMENT OF THE LIEBERT PRODUCT AS SET FORTH HEREIN. IF USER'S REMEDY IS DEEMED TO FAIL OF ITS ESSENTIAL PURPOSE BY A COURT OF COMPETENT JURISDICTION, LIEBERT'S RESPONSIBILITY FOR PROPERTY LOSS OR DAMAGE SHALL NOT EXCEED THE NET PRODUCT PURCHASE PRICE. IN NO EVENT SHALL LIEBERT ASSUME ANY LIABILITY FOR INDIRECT, SPECIAL, INCIDENTAL, CONSEQUENTIAL OR EXEMPLARY DAMAGES OF ANY KIND WHATSOEVER, INCLUDING WITHOUT LIMITATION LOST PROFITS, BUSINESS INTERRUPTION OR LOSS OF DATA, WHETHER ANY CLAIM IS BASED UPON THEORIES OF CONTRACT, NEGLIGENCE, STRICT LIABILITY, TORT, OR OTHERWISE. THE PRODUCTS LISTED IN THIS WARRANTY ARE NOT FOR USE IN CONNECTION WITH ANY NUCLEAR, MEDICAL, LIFE-SUPPORT AND RELATED APPLICATIONS.

D.A.DODD

CORPORATE OFFICE
14 E. Michigan Street
P.O. Box 430
Rolling Prairie, IN 46371
Phone (219) 778-4302
FAX (219) 778-2981

1251 Paw Paw Avenue
Benton Harbor, MI 49022
Phone (269) 926-7873
FAX (269) 926-7871

3416 Rascal Drive
Lafayette, IN 47909
Phone (765) 448-3405
FAX (765) 448-7955

4120 N. Home Street
Mishawaka, IN 46545
Phone (574) 968-0589
FAX (574) 968-0590

To: City Hall
Attention Brett Sanders
Date: 5/4/2018
From: Larry Carter
Subject: Liebert Unit recovery of existing and charging of New.

BP#: S18-061

We are pleased to provide a proposal for the above project. The scope of our work:

Includes: Labor and material

- **Recover refrigerant and proper disposal of, on existing Liebert unit**
- **Final connections of refrigerant lineset**
- **Install access Tee's at indoor unit**
- **Evacuate and charge New Unit**

Our Price: $ 1,880.00

Please note that:

- The above quotation is valid for thirty (30) days unless otherwise noted.
- All work is based on regular work hours
- Any work paid with a credit card (Visa, MasterCard, American Express) will incur a 5% handling charge. The 5% handling charge is NOT included in the prices quoted above.

Thank you for the opportunity to quote you on this project. If you have any questions, please do not hesitate to contact me at 765-479-2098 or by email at larrycarter@dadodd.com.

Submitted By:
Larry Carter
Service Manager
D.A. Dodd, LLC
Lafayette, IN

Accepted By (Customer)
Printed: _____

Signed: _____

May 30, 2018

Job # 18BK05

D A Dodd
3416 Rascal Drive
Lafayette, IN 47909

Attention: Brett Sanders

Subject: Lafayette City Hall HVAC
0
CHANGE DESCRIPTION
Replace AC Unit in 2nd Fl Server Ru

Thank you for the opportunity to quote the electrical changes

Our lump sum price for this change is:	$	631.00
total price for revised ASI	$	631.00

Scope of Work

Disconnect and reconnect AC unit in 2nd Fl Server Room. Add conduit and wire as necessary to rotate unit 180 degrees.

Please call me at (phone number) with any questions

Very truly yours,

LONG ELECTRIC COMPANY, INC.

Dennis Kiser
Project Manager

cc: Jeffrey J. Chlystun, President

6902 Hawthron Park Drive • Indianapolis, IN 46220 • TEL 317.356.2455 • FAX 317.356.0630

One Source
RENTALS • SALES • SERVICE

2835 CONCORD RD
LAFAYETTE, IN 47909
765-477-1155

Remit To:
ONE SOURCE EQUIPMENT RENTALS
75 REMITTANCE DR DEPT 3140
CHICAGO, IL 60675-3140
765-477-1155

RENTAL QUOTE

Job Site:
CITY HALL

LAFAYETTE, IN 47904

C#: 219-778-4302 J#: 219-778-4302

Customer: 3000368
D.A. DODD, INC.
PO BOX 430
ROLLING PRAIRIE, IN 46371

Contract #.. 52640
Contract dt. 5/07/18
Date out.... 5/07/18 7:39 AM
Est return.. 5/21/18 7:39 AM
Job Loc..... ,, LAFAYETTE
Job No..... 1 - CITY HALL
P.O. #.....
Ordered By.. BRETT
Terms..... Net 10 Days
Written by.. AUSTIN MORRIS
Salesman... 02112

Qty	Equipment #	Min	Day	Week	4 Week	Amount
1	1.1 TON A/C 115VAC 15A 13.7K 1300750	125.00	125.00	295.00	650.00	590.00

SALES ITEMS:

Qty	Item number	Unit	Price	
1	FUEL SURCHARGE 8% FUEL SURCHARGE	EA		N/C
1	EPA ENVIRONMENTAL FEE	EA	8.850	8.85
	DELIVERY CHARGE			65.00
	PICKUP CHARGE			65.00

DELIVERY INSTRUCTIONS:

Sub-total: 728.85
Tax: 51.02
Total: 779.87

IF THE EQUIPMENT DOES NOT WORK PROPERLY, NOTIFY THE OFFICE AT ONCE | MULTIPLE SHIFTS OR OVERTIME RATES APPLY | CUSTOMER IS RESPONSIBLE FOR REFUELING, DAMAGES OR REPAIRS

Lessee acknowledges receipt of operating instructions. Lessee assumes responsibility to adequately instruct subsequent operators and will permit only competent and qualified personnel to operate equipment. Lessee acknowledges that during the term of the lease, Lessor has no responsibility over the equipment's proper application, operation and conformance to operating and safety practices. Lessee will cease using equipment and call One Source Equipment Rentals, LLC for service if unit fails to operate properly.

This piece of equipment shall be used no more than eight (8) hours in any one day, nor more than five (5) days in any one week (except as provided in paragraph 4 hereof). Additional charges may result from neglected maintenance, improper use or excessive clean-up.

Rental terminates when One Source Equipment Rentals, LLC is notified and a termination number is assigned. Failure to comply constitutes additional rental charges.

All deliveries are subject to the terms and conditions on the reverse side.

I have read and agree to the terms of this rental contract and acknowledge receipt of the above stated equipment.

X

CUSTOMER SIGNATURE | DATE | NAME PRINTED | DELIVERED BY | DATE

Terms: Payment Due Net 10 - Delinquency charges, at the maximum monthly rate allowed by law, will apply 30 days from the date of invoice.

MOVINCOOL®
THE #1 SPOT COOLING SOLUTION

Distributed By:

One Source
RENTALS • SALES • SERVICE

www.onesourcerental.com

Classic Plus 14

The MovinCool Classic Plus 14 portable air conditioner has all the benefits of our proven Classic Series, PLUS new features designed to increase performance and control. The versatile Classic Plus is instantly ready to provide cool air in the hottest environments such as production lines, outdoor events, manufacturing processes, injection molding, metal forming and much more.

The Classic Plus features a programmable digital temperature controller allowing the user to "set" the desired temperature. By cooling only the area that needs it, the Classic Plus 14 portable air conditioner saves you money while protecting people and equipment and speeding up processes. Self-contained and portable, the Classic Plus 14 requires little or no installation - simply roll it in, plug it in and turn it on.

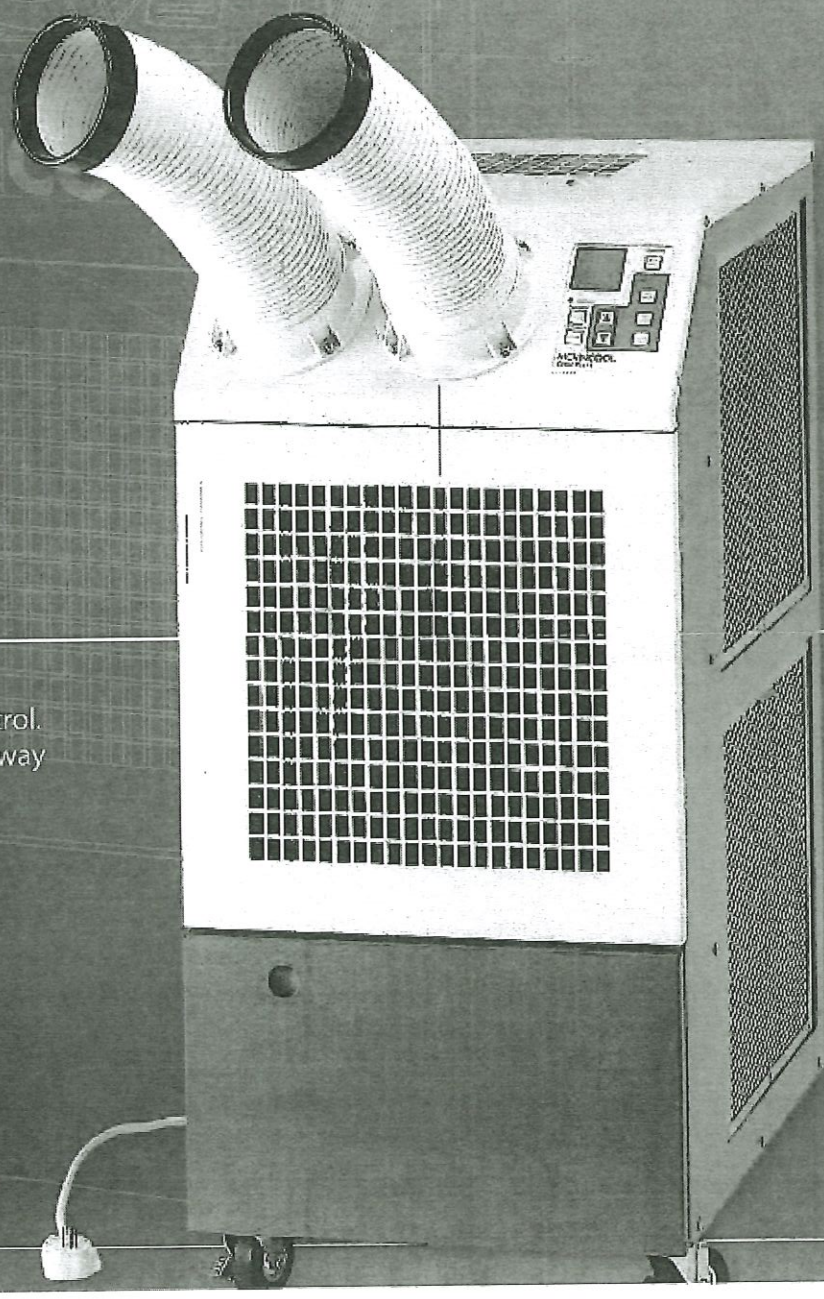

- Programmable digital temperature control. Set the desired temperature and walk away
- Operates on standard 115V power. Can be used anywhere for as little as 15 cents per hour
- Provides up to 13,200 Btu/h of cool air. Maximum spot cooling to just the spot that needs it
- Handles temperatures up to 113°F. Provides cooling in the hottest environments

Distributed By:

One Source
RENTALS • SALES • SERVICE
www.onesourcerental.com

MOVINCOOL®

THE #1 SPOT COOLING SOLUTION

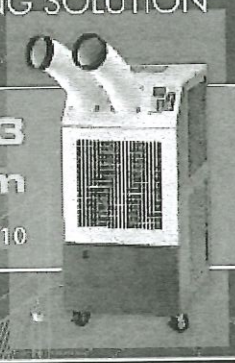

800.264.9573

www.movincool.com

DENSO SALES CALIFORNIA, Inc. 3900 Via Oro Ave. Long Beach, CA 90810

Technical Specs — Classic Plus 14

Electronic Features	Control Panel Thermostat Control	Programmable Electronic
Cooling Capacity	Rating Conditions: 95°F at 60% RH	13,200 Btu/h
Electrical Characteristics	Voltage Requirements Total Power Consumption Current Consumption Recommended Fuse Size NEMA Plug Configuration Min. – Max. Voltage	1 Phase, 115V 1.3 kW 11.9 amps 15 amps 5-15 105 – 125
Fans	Motor Output - high/low	0.24/0.19 kW
Evaporator	Fan Type Max. Air Flow - high/low Max. External Static Pressure	Centrifugal 440/380 CFM 0.31 IWG
Condenser	Fan Type Max. Air Flow - high/low Max. External Static Pressure	Centrifugal 880/760 CFM 0.19 kW
Compressor	Type Output	Hermetic Rotary 0.9 kW
Refrigerant	Type	R 410A
Dimensions	W x D x H	19 x 26 x 41 in
Net Weight/Shipping Weight		166/197 lb
Power Cord	Gauge/Length	14 AWG (3-core)/10 ft
Condensate Tank Capacity		5 gal
Operating Conditions	Min. – Max. (@ 50% RH)	70° - 113°F
Max. Equivalent Duct Length	Per Cold Duct Hose Hot Duct Hose	30 ft 60 ft
Max. Sound Level	With Condenser - Duct high/low Without Condenser - Duct high/low	57/55 dB(A) 60/58 dB(A)

All specifications subject to change without notice.

© 2010 DENSO SALES CALIFORNIA, INC. MovinCool, SpotCool and Office Pro are registered trademarks of DENSO Corporation.

360-0110-CP14

Primary Engineering, Inc
3077 East 98th Street, Suite 190
Indianapolis, Indiana 46280

(317) 324-1221 phone
info@primary-eng.com

Proposal Request

Date: May 1, 2018

Company: DA Dodd, LLC
3416 Rascal Drive
Lafayette, IN 47909

Attention: Brett Sanders

Project Name: City of Lafayette
City Hall HVAC Upgrades – 2018 (Controls)

Project #: B0003 / 16843

PR #: 01

State the cost/deduct for the following items, including material and labor take offs:

Provide and install new CRAC unit per attached Engineering Supplemental Instruction (ESI) #01.

$_____

Additional Cost ☐
Deduct Credit ☐

Signed: _____
Robert S. Christensen, PE

☐ Project File
☐ Chronological File
☐ Shop Drawing File
☐ Cc:

Document1

Primary Engineering, Inc
3077 East 98th Street, Suite 190
Indianapolis, Indiana 46280

(317) 324-1221 phone
info@primary-eng.com

Engineering Supplemental Instruction

Date: May 1, 2018

Company: D. A Dodd
3416 Rascal Drive
Lafayette, IN 47909

Attention: Brett Sanders

Project Name: City of Lafayette City Hall HVAC Upgrades – 2018 (Controls)

Project #: B0003 / 16843

ESI #: 01

Engineering Supplemental Instructions:

Replace existing CRAC unit serving Room 255 IT Equipment Room with new equipment and materials per attached "COMPUTER ROOM AIR CONDITIONING UNIT SCHEDULE (AIR COOLED)".

Contractor to provide quote for above described work, including costs of general and electrical contractor labor and materials.

Signed: _____
Robert S. Christensen, PE

- ☐ Project File
- ☐ Chronological File
- ☐ Shop Drawing File
- ☐ Cc:

Document1

COMPUTER ROOM AIR CONDITIONING UNIT SCHEDULE (AIR COOLED)

							AIRFLOW						REHEAT	HUMIDIFIER			ELECTRICAL				
TAG	MFR.	MODEL INDOOR UNIT	MODEL OUTDOOR UNIT	AREA SERVED	TOT. CAP. (MBH)	SENS. CAP. (MBH)	LOW (CFM)	HIGH (CFM)	EXT PD @ HIGH CFM	EDB (DEG F)	EWB (DEG F)	REL. HUM. (%)	CAP. (KW)	INPUT (KW)	CAPACITY (LB/HR)	MAX. OP. WT. (LB)	ELEC (V/PH)	FLA	WIRE SIZE AMPS	MAX FUSE SIZE	REMARKS
CRAC-2	LIEBERT	MMD24ENP00DN		ROOM 255 / EQUIPMENT ROOM	21.8	19.5	900	885	0.3	75	61	45	0	0	0	225	208 / 1	2.8	8.5	15	1,2,3,4,5,6,7,8
CRAC-2	LIEBERT	-	PFH027A-FLN				VARIABLE		0.0	86	NA	NA	NA	NA	NA	200	208 / 1	13.4	16.4	25	6,7,8,9,10,11

REMARKS:

1. PROVIDE AND INSTALL SUPPLY AND RETURN DISTRIBUTION PLENUM FOR INSTALLATION IS A 8x4 CEILING GRID.
2. CONTRACT WITH A CEILING CONTRACTOR FOR REMOVAL AND REINSTALLATION OF CEILING AS REQUIRED TO INSTALL EQUIPMENT.
3. PROVIDE UNIT WITH RETURN AIR SMOKE DETECTOR TO SHUT DOWN CRAC UNIT WITH SMOKE PRESENT.
4. PROVIDE AND INSTALL CONDENSATE PUMP, CONNECT DISCHARGE PIPING TO EXISTING DRAIN PIPING. CONFIRM INTERIOR OF EXISTING PIPING IS CLEAN, NOTIFY OWNER IF CLEANING REQUIRED.
5. PROVIDE BACNET COMMUNICATION INTERFACE TO HONEYWELL BUILDING AUTOMATION SYSTEM, COORDINATE HARDWARE, INSTALLATION, COMMUNICATION PROTOCOL, PROGRAMMING, AND I/O POINTS REQUIREMENTS WITH TCC.
6. PROVIDE ONE YEAR PARTS AND LABOR WARRANTIES. FIVE YEAR PARTS ONLY COMPRESSOR WARRANTY.
7. R-407C SYSTEM REFRIGERANT - REMOVE EXISTING REFRIGERANT PIPING BETWEEN INDOOR AND OUTDOOR UNIT, INSTALL NEW 7/8" SUCTION AND 3/8" LIQUID COPPER TUBING LINES.
8. REUSE EXISTING PIPE ROOF SLEEVES OR INSTALL NEW PIPE CURB EQUAL TO PATE CURB pcs-2 CURB WITH pcs-1 CAP FOR ROOF PENETRATION OF NEW REFRIGERANT PIPING, IF NEW CURB PROVIDED, USE FOR CONTROL AND POWER ELECTRICAL CIRCUITS, REMOVE ALL EXISTING ROOF SLEEVES, INSULATE PENETRATION, AND PATCH ROOF MEMBRANE.
9. PROVIDE VARIABLE SPEED CONDENSER FAN OPERATION WITH SYSTEM LOW AMBIENT OPERATION DOWN TO -30 DEG F.
10. MOUNT NEW CONDENSER ON EXISTING SUPPORT FRAME, INSTALL VIBRATION ISOLATORS PER MANUFACTURER REQUIREMENTS.
11. E.C. TO REMOVE EXISTING DISCONNECT AND ABOVE ROOF CONDUIT, PROVIDE AND INSTALL NEW NEMA 3X DISCONNECT AND RIGID AND FLEXIBLE CONDUIT.

FULLER
FULLER ENGINEERING COMPANY, LLC

4135 West 99th Street
Carmel, Indiana 46032
Phone: 317-228-5800
www.fullerengineering.com

Liebert

SUBMITTAL DATA AND INFORMATION

SMALL SYSTEMS
LIEBERT MINIMATE2
SPLIT SYSTEM

Job Name	Lafayette City Hall
Model	MMD24ENP00DN & PFH027A-PLN
Quantity	1
Date	April 17, 2018 – Revision #1
Job #	
Engineer	Primary Engineering
P.O. #	
Tag #	
Submitted By	Fuller Engineering Co., LLC Adam Conklin

SMALL SYSTEMS
MINI-MATE 2
SPLIT SYSTEMS
ENGINEERING SPECIFICATION SHEET

Project Name: Lafayette City Hall
Date: April 17, 2018 – Revision #1
Reference No.:
Submitted By: Fuller Engineering Co., LLC

Model Number MMD24ENP00DN **Qty: 1**
Condensing Model Number: PFH027A-PLN **Qty: 1**

ELECTRICAL SUPPLY REQUIREMENTS

Evaporator Section: 208 Volt, 1 Phase, 60 Hertz, 2.8 Full Load Amps, 3.5 Wire Sizing Amps
Condensing Unit: 208 Volt, 1 Phase, 60 Hertz, 13.4 Full Load Amps, 16.4 Wire Sizing Amps

NET CAPACITY DATA
- 75°F DB -- 61°F WB
- 45% RH
- Total: 21,800 BTU/H (6.4kW)
- Sensible: 19,500 BTU/H (5.7kW)
- R-407C Refrigerant

EVAPORATOR FAN
- Fan Motor Horsepower: 0.5
- Direct Drive Motor
- Air Volume: 800 CFM Low, 885 CFM High
- External Static Pressure: 0.3 Inches of Water

REHEAT SECTION
- None

HUMIDIFIER SECTION
- None

CONDENSING SECTION
- Design Ambient: 95°F
- Outdoor Lee-Temp Propeller Condensing Unit
- Low ambient control to -30°F

OPTIONAL EQUIPMENT
- Supply and Return Distribution Plenum – for installation in 2x4 ceiling grid
- Smoke Sensor
- Condensate Pump
- Communication Interface

SERVICES
- One Year Parts Warranty
- Optional First Year Labor Warranty
- Five Year Extended Compressor Warranty, Parts Only
- Check, Test and Start Up Service, Excluding Refrigerant

LIEBERT MINI-MATE2

CABINET DIMENSIONAL DATA
2 & 3 TON AIR, WATER/GLYCOL & CHILLED WATER MODELS
W/ DIRECT DRIVE BLOWER

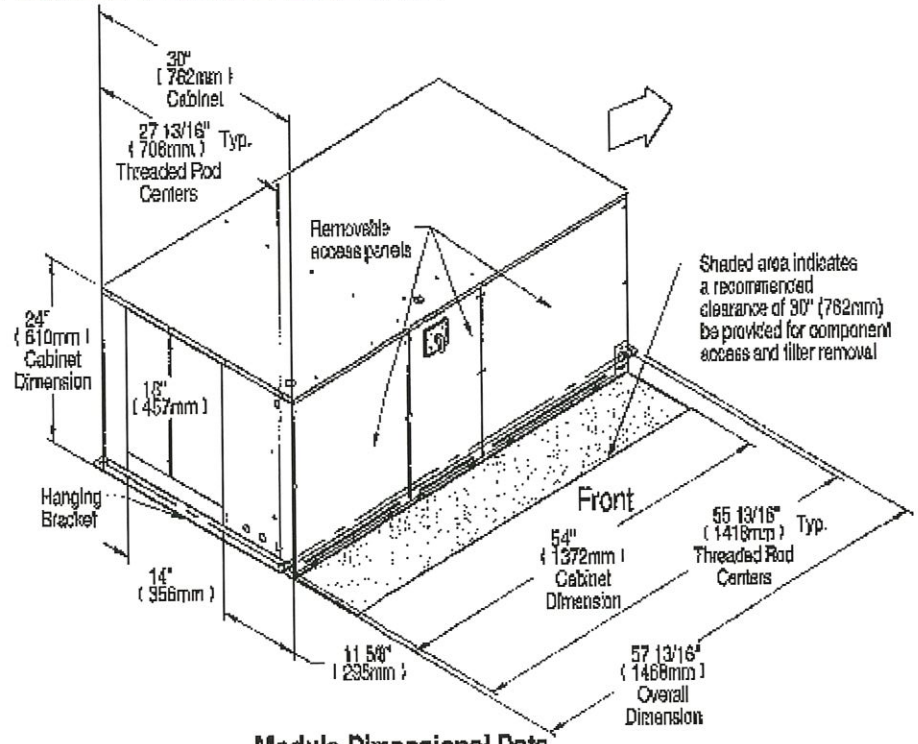

Module Dimensional Data

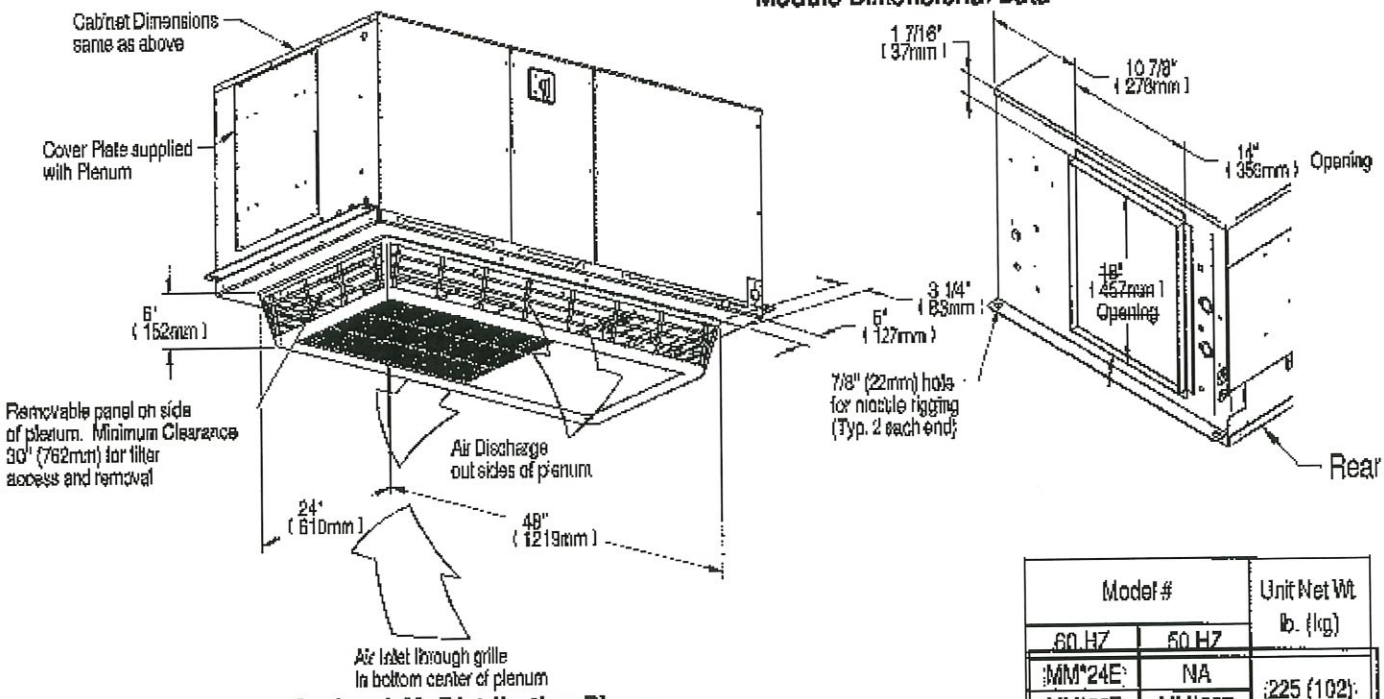

Optional Air Distribution Plenum
All Piping & Electrical connections are the same

Model #		Unit Net Wt lb. (kg)
60 HZ	50 HZ	
MM*24E	NA	225 (102)
MM*36E	MM*35E	
MM*40C	MM*39C	230 (104)

VERTIV.

LIEBERT AIR COOLED SYSTEMS

RECOMMENDED REFRIGERANT LINE SIZES CU, OD
LIEBERT AIR-COOLED SYSTEMS USING R-407C

System Fluid : R-407C		Standard Scroll Models (Non-Digital Scroll)				4-Step Semi-Hermetic or Digital Scroll Models		
Indoor Model	Equivalent Length	50 ft (15m)	100 ft (30m)	150 ft (45m)	200 ft (60m)	50 ft (15m)	100 ft (30m)	150 ft (45 m)
DS035	Hot Gas Line, in.	7/8	7/8	7/8		3/4	7/8	7/8
	Liquid Line, in.	1/2	5/8	5/8		1/2	5/8	5/8
DS042	Hot Gas Line, in.	7/8	7/8	7/8		7/8	7/8	1-1/8 [2]
	Liquid Line, in.	1/2	5/8	5/8		5/8	5/8	5/8
DS053	Hot Gas Line, in.	7/8	1-1/8	1-1/8		7/8	1-1/8 [2]	1-1/8 [2]
	Liquid Line, in.	5/8	7/8	7/8		7/8	7/8	7/8
DS070	Hot Gas Line, in.	1-1/8	1-1/8	1-1/8		1-1/8 [2]	1-1/8 [2]	1-1/8 [2]
	Liquid Line, in.	7/8	7/8	7/8		7/8	7/8	7/8
DS077 [3]	Hot Gas Line, in.	1-1/8	1-1/8	1-1/8		1-1/8	1-1/8	1-1/8
	Liquid Line, in.	7/8	7/8	7/8		7/8	7/8	7/8
DS105 [3]	Hot Gas Line, in.	1-3/8	1-3/8	1-3/8		1-3/8	1-3/8	1-3/8
	Liquid Line, in.	7/8	7/8	1-1/8		7/8	7/8	1-1/8
XDC160	Hot Gas Line, in.	1-1/8 [4]	1-1/8 [4]	1-3/8 [4]	1-3/8 [4]			
	Liquid Line, in.	7/8	1-1/8	1-1/8	1-1/8			

System Fluid : R-407C		Standard Scroll Models (Non-Digital Scroll)				
Indoor Model	Equivalent Length	(50 ft (15m))	(75 (23m))	(100 ft (30m))	(125 (38m))	(150 ft (45m))
MMD12	Suction Line, in.	5/8	5/8	7/8	7/8	7/8
	Liquid Line, in.	3/8	3/8	3/8	3/8	3/8
MMD18 / DME020	Suction Line, in.	5/8	7/8	7/8	7/8	7/8
	Liquid Line, in.	3/8	3/8	3/8	1/2	1/2
MMD24 / DME027	Suction Line, in.	7/8	7/8	7/8	7/8	7/8
	Liquid Line, in.	3/8	3/8	1/2	1/2	1/2
MMD36/ MMD35 / DME037 / MMD96-3T / MMD95-3T	Suction Line, in.	7/8	7/8	1-1/8 [2]	1-1/8 [2]	1-1/8 [2]
	Liquid Line, in.	1/2	1/2	1/2	1/2	1/2
MMD60/ MMD59 / MMD96-5T /MMD95-5T	Suction Line, in.	1-1/8	1-1/8	1-1/8	1-3/8	1-3/8
	Liquid Line, in.	1/2	5/8	5/8	5/8	5/8

Note:
1. Consult factory for proper line sizing for runs longer than maximum equivalent length shown in tables above.
2. Downsize vertical riser one trade size (1-1/8" to 7/8").
3. Digital scroll not available on D77 and 105 models.
4. Double risers are required when hot gas vertical rise is 15 ft (4.6m) or more. Refer to XDC user manual

LIEBERT PFH

CABINET DIMENSIONAL DATA
CONDENSING UNIT W/ HORIZONTAL AIR DISCHARGE

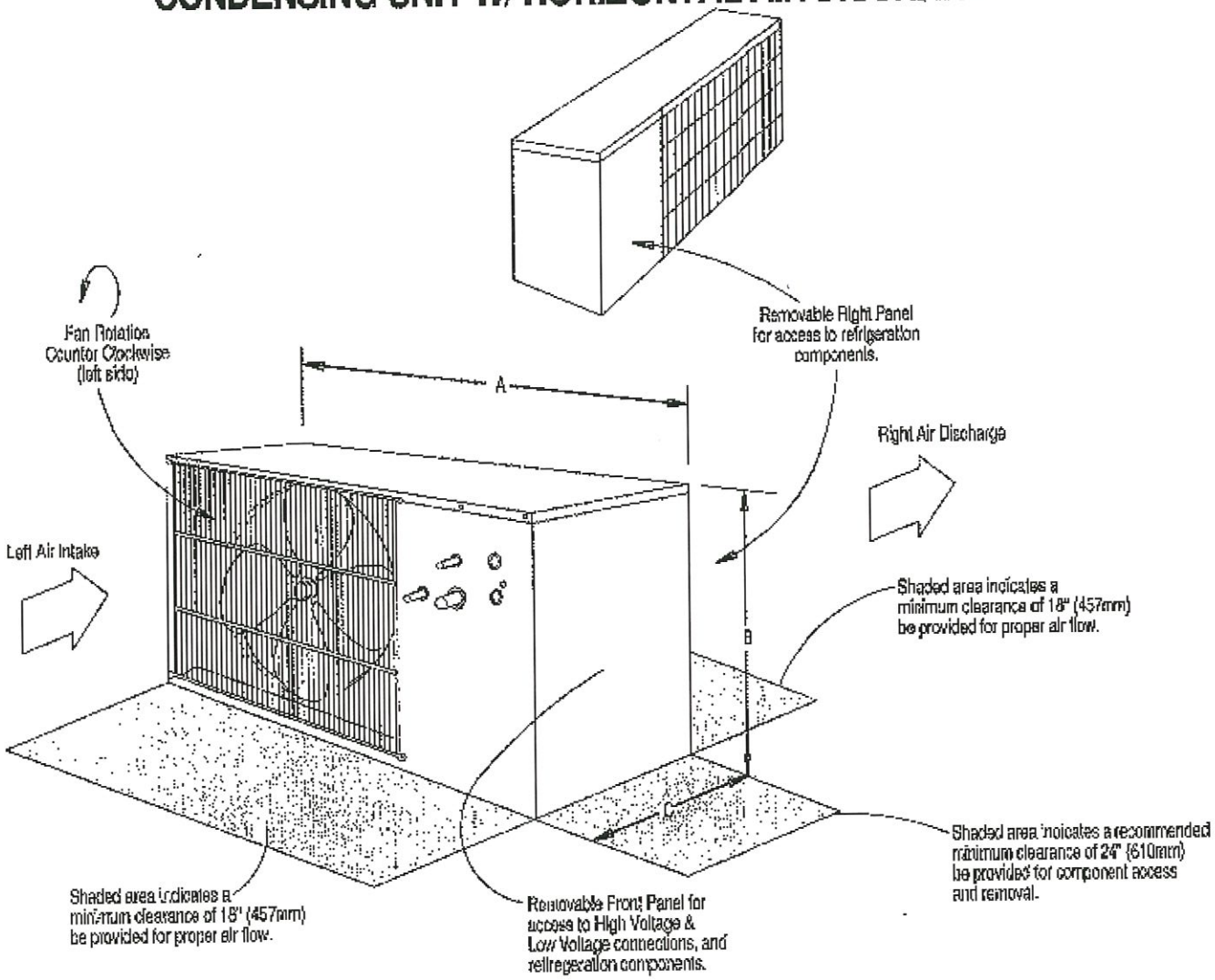

MODEL NUMBERS		DIMENSIONAL DATA IN. (mm)			MODULE WEIGHT
60 HZ	50HZ	A	B	C	lbs. (kg) net
~~PFH014A-L~~	NA	40 (1016)	23 1/2 (597)	18 (457)	200 (91)
~~PFH020A-L~~	NA				
~~PFH027A-L~~	NA				
PFH027A-H	NA	48 (1219)	31 (787)	18 (457)	241 (109)
PFHZ27A-L	NA				
PFH037A-L	PFH036A-L				
PFH042A-L	PFH041A-L				
PFH037A-H	PFH036A-H	53 (1343)	36 1/4 (918)	18 (457)	351 (159)
PFHZ37A-L	PFHZ36A-L				
PFH042A-H	PFH041A-H				
PFHZ42A-L	PFHZ41A-L				
PFH067A-L	PFH066A-L				

D.A. DODD

CORPORATE OFFICE
14 E. Michigan Street
P.O. Box 430
Rolling Prairie, IN 46371
Phone (219) 778-4302
FAX (219) 778-2981

1251 Paw Paw Avenue
Benton Harbor, MI 49022
Phone (269) 926-7873
FAX (269) 926-7871

3416 Rascal Drive
Lafayette, IN 47909
Phone (765) 448-3405
FAX (765) 448-7955

2516 N. Home Street
Mishawaka, IN 46545
Phone (574) 968-0589
FAX (574) 968-0590

July 3, 2018

Primary Engineering, Inc.
3077 East 98th Street, Ste. 190
Indianapolis, Indiana 46280

Attention: Rob Christensen

Re: City Hall HVAC Upgrades - 2018
D.A. Dodd Job #LF18-006E CP-9

Please accept the cost to add service valves and an additional 1 ½" circuit setter to the upper floor RTU's to be cut in on a Saturday for the sum of **Three Thousand, Nine Hundred and Eighty-Five Dollars and 00/100 Cents.**

Subtotal	$3,658.83
Mark Up	$326.17
Total	$3,985.00

If you have any questions on the above, please do not hesitate to contact me at 765/448-3405 or by email at brettsanders@dadodd.com.

Respectfully,

Brett Sanders

Attachment

cc: File
Field

D.A.DODD

Job Name: City Hall HVAC Upgrades - 2018

CP-9

D.A. Dodd Job LF18-006E

Description	Material Quantity	Material Unit Price	Material Total	Labor Labor Cost	Labor Total Labor
Material					
	0	$0.00	$0.00	0	0
2" pro press ball valves w/ handle extension	2	$86.43	$172.86	1.36	2.72
1 1/2" pro press ball valves w/ handle extensio	4	$47.61	$190.44	1.29	5.16
1 1/4" pro press ball valves w/ handle extensio	4	$36.20	$144.80	1.24	4.96
1 1/2" B&G circuit setter	1	$90.00	$90.00	1.62	1.62
1 1/2" pro press MIP adapter	1	$23.23	$23.23	0.15	0.15
1 1/2" pro press MIP adapter union	1	$52.22	$52.22	0.55	0.55
valve handle extensions	10	$11.10	$111.00	0	0
systems drain down	1	$0.00	$0.00	2	2
systems refill	1	$0.00	$0.00	2	2
	0	$0.00	$0.00	0	0
shipping	1	$20.00	$20.00	0	0
	0	$0.00	$0.00	0	0
	0	$0.00	$0.00	0	0
	0	$0.00	$0.00	0	0
	0	$0.00	$0.00	0	0
	0	$0.00	$0.00	0	0
	0	$0.00	$0.00	0	0
	0	$0.00	$0.00	0	0
	0	$0.00	$0.00	0	0
	0	$0.00	$0.00	0	0
	0	$0.00	$0.00	0	0
	0	$0.00	$0.00	0	0
	0	$0.00	$0.00	0	0
	0	$0.00	$0.00	0	0
	0	$0.00	$0.00	0	0
	0	$0.00	$0.00	0	0
	0	$0.00	$0.00	0	0
	0	$0.00	$0.00	0	0
Material Total			**$804.55**		
Subcontractors					
Sheet Metal	1		$0.00		0
Controls	1		$0.00		0
Insulation	1	$585.00	$585.00		0
Test and Balance	1		$0.00		0
GC - 2' x 2' access panel - installed	1	$200.00	$200.00		0
			$0.00		0
			$0.00		0
			$0.00		0
			$0.00		0
Subcontractors Total			**$785.00**		19.16
				Labor Cost	$108.00
				Total Labor	$2,069.28

Sub Total	$3,658.83
10% Mark Up - Material	$80.46
5% Mark Up - Subs	$39.25
10% Mark Up - Labor	$206.93
Total	$3,985.46

BARRY COMPANY
1145 East Maryland Street
Indianapolis, IN 46202
USA
Phone: (317) 637-5327
Fax: (317) 637-8525

QUOTE

DATE	QUOTE NO.	PAGE
06-30-18	670651	1 of 1
Quoted By: MIKER		

BILL TO:
D.A. DODD INC.
14 EAST MICHIGAN
ROLLING PRAIRIE, IN 46371
USA

SHIP TO:
D.A. DODD INC.
14 EAST MICHIGAN
ROLLING PRAIRIE, IN 46371
USA

CUSTOMER RFQ #	SHIP VIA	SALESPERSON	PAYMENT TERMS	SHIP DATE
QUOTE	CUSTOMER PICK-UP	MIKE ROBINSON	2% 10TH N30	06-30-18

LINE	PRODUCT / DESCRIPTION	QTY ORD	UNIT	PRICE	PER	TOTAL
1	691514197388 PRESS BALL VALVE 1-1/4" TO 2" STEM EXTENSION KIT 23441	10	EA	11.10	EA	111.00
3	691514196742 PRESS *LOW LEAD* BALL VALVE 1-1/2"	4	EA	47.61	EA	190.44
4	691514196744 PRESS *LOW LEAD* BALL VALVE 2"	2	EA	86.43	EA	172.86
5	691514196740 PRESS *LOW LEAD* BALL VALVE 1-1/4"	4	EA	36.20	EA	144.80
6	691514778723 PRESS ADAPTER 1-1/2"X1-1/2" CXM 77872	1	EA	23.23	EA	23.23
7	691514777726 PRESS UNION 1-1/2"X1-1/2" CXF 77772	1	EA	52.22	EA	52.22
	PRICE IN EFFECT AT TIME OF SHIPMENT WILL APPLY. ALL STOCK SUBJECT TO PRIOR SALE.					

PRICE IN EFFECT AT TIME OF SHIPMENT WILL APPLY. ALL STOCK SUBJECT TO PRIOR SALE.

SUB TOTAL	$694.55
SALES TAX	$0.00
TOTAL	**$694.55**

Brett Sanders

From: Josh Chrapliwy <JChrapliwy@hydstm.com>
Sent: Monday, July 2, 2018 3:23 PM
To: Brett Sanders
Subject: RE: Lafayette City Hall - 1 1/2" B&G CC Quote

Brett
Same price

$90.00

Josh Chrapliwy
Hydronic & Steam Equipment Co., Inc.
224 W. Garst St.
South Bend, IN 46601
Tel: 574-234-6005
Fax: 574-234-6611
Cell: 574-210-2304
E-mail: jchrapliwy@hydstm.com
Website: www.hydstm.com

HYDRONIC & STEAM EQUIPMENT CO., INC.
HEATING | COOLING | STEAM | PLUMBING | INDUSTRIAL PROCESS

From: Brett Sanders [mailto:brettsanders@dadodd.com]
Sent: Monday, July 02, 2018 3:10 PM
To: Josh Chrapliwy
Cc: John Edwards; Quentin Foley
Subject: Lafayette City Hall - 1 1/2" B&G CC Quote

Josh,
Quote me one more 1 ½" B&G CC please for a adder quote. thanks.

D.A.DODD

Brett Sanders
Project Manager
Mobile: (765) 479-3026
brettsanders@dadodd.com

D.A. Dodd, LLC
www.dadodd.com

OUR REPUTATION IS YOUR ASSURANCE

14 E. Michigan Street, P.O. Box 430, Rolling Prairie, IN 46371
P: (219) 770-4502 / F: (219) 770-2981

3416 Rascal Drive, Lafayette, IN 47909
P: (765) 448-3405 / F: (765) 448-7955

1251 Paw Paw Avenue, Benton Harbor, MI 49022
P: (269) 926-7871 F: (269) 926-7871

2516 North Home Street, Mishawaka, IN 46545
P: (574) 968-0569 F: (574) 968-0590

MNO·BMADSEN

D.A. Dodd is a wholly owned subsidiary of MNO-Bmadsen, the economic development enterprise chartered by the Pokagon Band of the Potawatomi Indians

FARGO INSULATION CO., INC.

mechanical insulation contractors since 1949

2120 East Clay Street
Indianapolis, IN 46205

Phone 317.546.4881
Fax 317.546.4885
www.fargoinsulation.com

Insulation Change Proposal (#13437CP01)

July 3, 2018

Lafayette City Hall – 2018 HVAC Upgrades – Additional Valves

Lafayette, IN

DA Dodd – Mr. Brett Sanders

Additional Valves per your quantities

Material:	**$ 117.00**
Labor:	**$ 468.00**
Total Add:	**$ 585.00**

We include the Saturday time requirements on part of these valves as directed.

Exclusions:

- Same as original bid.

We appreciate this opportunity to quote. Please call me at your convenience should you have any questions or need additional information.

Sincerely,

FARGO Insulation Co., Inc.

Jerry Allison

Jerry Allison, Senior Project Estimator

Jerry.Allison@fargoinsulation.com

D.A. DODD

CORPORATE OFFICE
14 E. Michigan Street
P.O. Box 430
Rolling Prairie, IN 46371
Phone (219) 778-4302
FAX (219) 778-2981

1251 Paw Paw Avenue
Benton Harbor, MI 49022
Phone (269) 926-7873
FAX (269) 926-7871

3416 Rascal Drive
Lafayette, IN 47909
Phone (765) 448-3405
FAX (765) 448-7955

2516 N. Home Street
Mishawaka, IN 46545
Phone (574) 968-0589
FAX (574) 968-0590

July 17, 2018

Primary Engineering, Inc.
3077 East 98th Street, Ste. 190
Indianapolis, Indiana 46280

Attention: Rob Christensen

Re: City Hall HVAC Upgrades - 2018
D.A. Dodd Job #LF18-006E CP-11

At Jason Pierce's request, please accept the cost to repair piping on the chiller and re-insulate for the sum of **One Thousand, Seven Hundred and Twenty Dollars and 00/100 Cents.**

Subtotal	$1,563.50
Mark Up	$156.50
Total	$1,720.00

If you have any questions on the above, please do not hesitate to contact me at 765/448-3405 or by email at brettsanders@dadodd.com.

Respectfully,

Brett Sanders

Attachment

cc: File
Field

D.A.DODD

Job Name: City Hall HVAC Upgrades - 2018

CP-11

D.A. Dodd Job LF18-006E

Description	Material Quantity	Material Unit Price	Material Total	Labor Labor Cost	Labor Total Labor
Material					
	0	$0.00	$0.00	0	0
	0	$0.00	$0.00	0	0
Piping repair time	1	$0.00	$0.00	16	16
	0	$0.00	$0.00	0	0
Piping insulation time	1	$0.00	$0.00	4	4
Insulation tape 1/8" thick 2" x 30'	10	$12.35	$123.50	0	0
	0	$0.00	$0.00	0	0
	0	$0.00	$0.00	0	0
	0	$0.00	$0.00	0	0
	0	$0.00	$0.00	0	0
	0	$0.00	$0.00	0	0
	0	$0.00	$0.00	0	0
	0	$0.00	$0.00	0	0
	0	$0.00	$0.00	0	0
	0	$0.00	$0.00	0	0
	0	$0.00	$0.00	0	0
	0	$0.00	$0.00	0	0
	0	$0.00	$0.00	0	0
	0	$0.00	$0.00	0	0
	0	$0.00	$0.00	0	0
	0	$0.00	$0.00	0	0
	0	$0.00	$0.00	0	0
	0	$0.00	$0.00	0	0
	0	$0.00	$0.00	0	0
	0	$0.00	$0.00	0	0
	0	$0.00	$0.00	0	0
	0	$0.00	$0.00	0	0
	0	$0.00	$0.00	0	0
Material Total			**$123.50**		
Subcontractors					
Sheet Metal	1		$0.00		0
Controls	1		$0.00		0
Insulation	1		$0.00		0
Test and Balance	1		$0.00		0
			$0.00		0
			$0.00		0
			$0.00		0
			$0.00		0
			$0.00		0
Subcontractors Total			**$0.00**		20.00
				Labor Cost	$72.00
				Total Labor	$1,440.00

Sub Total	$1,563.50
10% Mark Up - Material	$12.35
5% Mark Up - Subs	$0.00
10% Mark Up - Labor	$144.00
Total	$1,719.85

AMENDMENT TO LEASE AGREEMENT

This Amendment is entered into on this _____ day of _____, 2020, by and between the City of Lafayette (the "City") and Long Center, Inc ("LCI"), an Indiana non-profit corporation.

WHEREAS, on March 18, 1997, the City and LCI entered into a Lease Agreement ("Lease") for certain real estate commonly known as the Long Center for Performing Arts located at 111 N. 6th St, Lafayette, Indiana;

WHEREAS, the Lease was amended on January 9, 2007, primarily extending the term;

WHEREAS, the Lease was further amended on August 25, 2015, to add the St. John's Pavilion to the Lease;

WHEREAS, the Lease, as amended, granted LCI the option to renew the Lease for three (3) additional ten (10) year terms by giving written notice to the City no less than three months prior to the expiration of the preceding term;

WHEREAS, the most recent term expired on March 18, 2017 and although LCI did not provide written notice of its intent to renew, the parties have continued to perform under the Lease as though the term was officially renewed;

WHEREAS, the parties desire to confirm the renewal of the lease term through March 18, 2027 and further amend the Lease concerning janitorial services and supplies;

NOW, THEREFORE, in consideration of the mutual promises contained herein, the City and LCI agree as follows:

1. The Lease has been renewed for an additional ten (10) year term commencing on March 18, 2017 and ending on March 18, 2027. LCI may renew the Lease Agreement for one additional ten (10) year term commencing on March 18, 2027 and ending on March 18, 2037 by providing to the City written notice of its intent to renew at least three months prior to the expiration of the current term.

2. LCI shall assume responsibility for all janitorial duties at the Leased Premises including but not limited to: general cleaning of building; vacuum, sweep and mop floors; clean and stock restrooms; clean up spills. LCI shall be responsible for providing, at their sole cost, any janitorial supplies used in the performance of their janitorial duties.

3. All other terms and conditions of the Lease dated March 18, 1997, as amended on January 9, 2007 and August 25, 2015, shall remain in full force and effect.

LESSEE
LONG CENTER, INC

By: Thera L. Spivey, President, January 16, 2020

By: [illegible], executive director, Jan. 16, 2020

LESSOR
City of Lafayette, Indiana
By its Board of Public Works and Safety

_____
Gary Henriott, President

_____
Cindy Murray, Member

_____
Norm Childress, Member

_____
Ron Shriner, Member

_____
Amy Moulton, Member

Attest:

_____
Mindy Miller, Deputy Clerk

LEASE AGREEMENT

This Lease Agreement is entered into this _____ day of _____, 2020, by and between the City of Lafayette, Indiana, a municipal corporation ("City") and Long Center, Inc, an Indiana non-profit corporation ("LCI");

1. **Leased Premises**. The City leases to LCI the building commonly known as the Lafayette Theater located at 600 Main St, Lafayette, Indiana ("Leased Premises") and more completely described on the attached Exhibit "A".

2. **Term**. The initial lease term shall commence on January 8, 2020 and shall continue through March 18, 2027. LCI shall have the option to renew this Lease Agreement for one (1) additional ten (10) year term by giving written notice to the City no less than three months prior to the expiration of the initial term.

3. **Rent.** LCI shall pay as rent the sum of $10.00 per year payable in advance.

4. **Utilities**. The City shall provide, at its cost, gas, electric and water/wastewater (including any related stormwater or fire line fees) to the Leased Premises. LCI shall be responsible, at its sole cost, for all trash removal at the Leased Premises.

5. **Use of Premises**. LCI shall use the Leased Premises for lawful purposes only and shall primarily be operated by LCI as an Event Center.

6. **Liquor License**. LCI shall be able to apply for an alcoholic beverage license for use at the Leased Premises. LCI shall operate in compliance with all alcohol beverage permit laws, rules and regulations and at all times maintain appropriate liquor liability insurance and name the City as Additional Insured.

7. **Assignment and Subletting.** LCI shall not assign, mortgage, encumber or transfer this Lease in whole or in part, or sublet the Leased Premises or any part thereof without the prior written consent of the City, which consent may be withheld at the sole discretion of City. LCI shall develop policies for rental of all or portions of the building on an hourly or temporary basis, including, without limitation, for performances, rehearsals and meetings. The written consent of the City is required for such policies, which consent shall not be unreasonably withheld, delayed or conditioned. Rental of all or portions of the building on an hourly or temporary basis, consistent with said approved policies, shall not require additional approval of the City.

8. **Mechanics' Liens.** LCI shall not permit any Statement of Intention to hold a Mechanic's Lien to be filed against the Leased Premises or any part thereof nor against any interest or estate therein by reason of labor, services or materials claimed to have been performed or furnished to or for LCI.

9. **Alteration and Maintenance of Licensed Premises.**

Alterations. LCI shall not cause or permit alterations, additions or changes of or upon any part of the Leased Premises without first obtaining the written consent of City.

Responsibility of City. The City shall be responsible for all major repairs to the interior and exterior of the Leased Premises, including, but not limited to, the furnace, air conditioner and plumbing. For the purpose of this Agreement, major repairs shall be defined as any one repair which costs exceed five hundred dollars ($500.00) per occurrence.

Responsibility of LCI. LCI shall be responsible for all other routine repair and maintenance. LCI shall be responsible for all janitorial duties including but not limited to: general cleaning of the building; vacuum, sweep and mop floors; clean and stock restrooms and clean up spills. LCI shall be responsible for providing, at their sole cost, any janitorial supplies used in the performance of their janitorial duties. In the event LCI fails to make any repairs to the Leased Premises as specified above, the City may, in its discretion, do so and charge LCI such amount as additional rent, payable within thirty (30) days.

10. **Surrender and Holdover.** Upon the expiration or sooner termination of this Lease, LCI shall surrender to City the Leased Premises, together with all other property affixed to the Leased Premises, broom clean and in the same or better order and condition in which LCI received them, the effects of ordinary wear, acts of God, casualty, insurrection, riot or public disorder excepted. If LCI vacates or abandons the Leased Premises or is dispossessed by process of law, any personal property belonging to LCI and left on the Leased Premises shall be deemed abandoned at the option of City and shall become the property of City. If LCI shall remain in possession of all or any part of the Leased Premises after the expiration of the term of this Lease, with the consent of the City, then LCI shall be a tenant on a month to month at the same rental and subject to all of the other applicable covenants, terms and conditions hereof.

11. **Insurance.** LCI shall have the responsibility to insure its own personal property located in the Leased Premises. LCI waives all claims against City for damages to goods or for injuries to persons on or about the Leased Premises from any cause arising at any time. LCI shall procure and maintain General Liability insurance (including automobile) with a combined single limit of $1,000,000 covering the Leased Premises and LCI's use thereof. The City shall be named as an Additional Insured and be given a 30 day notice of cancellation, non-renewal or significant change of coverage. LCI shall maintain Worker's Compensation insurance at the statutory limit and include a Waiver of Subrogation in favor of the City. Certificates of insurance shall be provided by LCI to City.

12. **Indemnification and Release.**

A. LCI shall indemnify, defend and hold harmless City from and against any loss (including, but not limited to, reasonable attorney fees) and against all claims, actions, damages, liability and expenses in connection with loss of life, bodily and personal injury or damage to the Leased Premisesarising from or in connection with LCI's use of the Leased Premises or occasioned wholly or in part by any act or omission of LCI, its agents, contractors, employees, concessionaires or invitees, or by anyone permitted to be on the Leased Premises by LCI, except any arising or occasioned wholly or in part by an act or omission of City, its agents, contractors, employees, concessionaires or invitees.

B. LCI assumes all risks of and the City shall not be liable for injury or damage to property resulting from the condition of the Leased Premises.

C. LCI agrees, at all times, to defend, indemnify and hold harmless City against all actions, demands, costs, damages or expenses of any kind (including, but not limited to, reasonable attorneys' fees) which may be brought or made against or which City may pay or incur by reason of LCI's occupancy of the Leased Premises or its negligent performance of or failure to perform any of its obligations under this Lease.

D. In case City shall, without fault on its part, be made a party to litigation commenced by or against LCI, LCI shall defend, indemnify and hold harmless the same and shall pay all costs, expenses and reasonable attorneys' fees incurred by or on behalf of the same in connection with such litigation. This provision shall survive expiration or termination of this Lease.

13. **Events of Default.** Any of the following shall be deemed an Event of Default:

A. LCI's failure to perform or observe any other covenant, term or condition of this Lease Agreement to be performed or observed by LCI, and if curable, the failure continues for fifteen (15) days after written notice thereof is given to LCI; or

B. Abandonment of the Leased Premises.

14. **City's Remedies.** Upon the occurrence of any Event of Default City may, at its option, in addition to any other remedy or right it has hereunder or by law may re-enter the Leased Premises, without demand or notice, and resume possession by an action in law or equity or by force or otherwise and without being liable in trespass or for any damages and without terminating this Lease. City may remove all persons and property from the Leased Premises and such property may be removed and stored at the cost of LCI.

Upon the occurrence of any Event of Default, City may, if such default has not been cured, cure that default at the expense of LCI. If City in curing such default is compelled to pay or elects to pay any sum of money or do any acts that require the payment of any sum of money, the sum so paid or incurred shall be reimbursed by LCI upon demand by City.

15. **Attorney Fees.** In the event any litigation arising from or related to this Agreement, the prevailing party shall be entitled to recover from the non-prevailing party all reasonable costs and attorney fees.

16. **Personal Property.** Certain sound, lighting and general theater personal property owned by the City, as set forth on the attached Exhibit "B" ("Personal Property"), is currently located at the Leased Premises. LCI may use such Personal Property during the term of this lease provided that LCI maintains and cares for such Personal Property and does not commit any waste associated with such use. The Personal Property shall be returned to the City in the same condition

as currently existing, ordinary wear and tear excepted. In the event any of the Personal Property is damaged, destroyed or becomes inoperable due to ordinary wear and tear, the parties agree to discuss with each other, in good faith, the replacement of the personal property.

17. **Notice.** Any notices to be given hereunder shall be deemed sufficiently given when in writing and (a) actually served on the party to be notified or (b) placed in an envelope directed to the party to be notified at the following addresses and deposited in the United States mail by certified or registered mail, postage prepaid.

To City: City of Lafayette, Attn: Mayor's Office, 20 N. 6th St, Lafayette, Indiana 47901.
To LCI: At Leased Premises or such other address as LCI may designate in writing.

Such addresses may be changed by either party by giving written notice as to the new address as above provided.

18. **General Provisions.**

A. ***Remedies cumulative.*** The remedies given to City in this Lease shall be cumulative, and the exercise of any one remedy by City shall not be to the exclusion of any other remedy.

B. ***Waivers.*** No waiver by City of any default by LCI shall be effective unless in writing. Waiver by City of any breach of any covenant or duty of LCI under this Lease is not a waiver of a breach of any other covenant or duty of LCI, or of any subsequent breach of the same covenant or duty. City's acceptance of rent shall not be deemed a waiver as to any preceding default.

C. ***Binding on Successors.*** This Lease shall extend to and be binding upon the successors and assigns of the parties. This provision, however, shall not be construed to permit the assignment of this Lease except as may be permitted hereby.

D. ***Captions are for convenience only.*** The captions and numbers to the paragraphs of this Lease are solely for the convenience of the parties and shall not be used to explain, define, limit, modify, simplify, or aid in the interpretation of the provisions of this Lease.

E. ***Forms of words.*** When applicable, use of the singular form of any word shall mean or apply to the plural and the neuter form shall mean or apply to the feminine or masculine.

F. ***Lease Is Parties' Entire Agreement.*** This Lease shall constitute the entire agreement between the parties. Any prior understanding or representation of any kind preceding the date of this Lease shall not be binding upon either party except to the extent incorporated in this Lease. Any modification of this Lease or additional obligation assumed by either party in connection with this Lease shall be binding only if evidenced in a writing signed by each party or an authorized representative of each party.

G. ***Discriminatory Practices Disapproved.*** No party hereto shall exclude, on the basis of race, color, age, physical or mental disability, sex, sexual orientation, gender identity, place of residence, or national origin, any person from using the Leased Premises or from participating in any of the activities or services permitted by this Lease.

H. ***Indiana Smoke Free Law.*** LCI shall comply with Indiana's Smoke Free Air Law and smoking shall not be permitted anywhere within the Leased Premises.

IN WITNESS WHEREOF, City and LCI have executed this Lease on the dates written below, and if this Lease is executed in counterparts, each shall be deemed an original.

LESSEE
LONG CENTER, INC

By: Ilicia T. Sprey

Printed: Ilicia T. Sprey

Title: President

Dated: January 16, 2020

LESSOR
City of Lafayette, Indiana
By its Board of Public Works and Safety

_____
Gary Henriott, President

_____
Cindy Murray, Member

_____
Norm Childress, Member

_____
Ron Shriner, Member

_____
Amy Moulton, Member

Attest:

_____
Mindy Miller, Deputy Clerk

Dated:_____

EXHIBIT "A"

Lot numbered One (1) in Jeremiah Bartholomew's Addition to the Town, not City of Lafayette, as platted upon a part of the South Fraction of the Southeast Quarter of Section Twenty (20), of Township Twenty-three (23) North, Range Four (4) West. Also a strip of ground thirteen and one-half (13 ½) inches in width adjacent to and along the West side of lot one in Jeremiah Bartholomew's Addition to the City of Lafayette, in said county and state. Located in Fairfield Township, Tippecanoe County, Indiana.

EXHIBIT "B"

PERSONAL PROPERTY

(Complete list is forthcoming)

LAFAYETTE HOUSING AUTHORITY

CITY OF LAFAYETTE

January 15, 2020

Board of Public Works & Safety
City of Lafayette
20 North 6th Street
Lafayette, IN 47901

RE: Agreement between Lafayette Housing Consortium and New Chauncey Housing, Inc.
CHDO Operating Funds Agreement 2019-2020

Dear Board Members,

New Chauncey Housing, Inc. has been recertified as a CHDO (Community Housing Development Organization) and is eligible to receive operating funds through the HUD HOME program for planning and implementing housing projects. This agreement is for the Program Year 2019 award of $19,426.00.

This agreement has been reviewed by the Deputy City Attorney and is submitted for your approval.

Please feel free to call me at 771-1309 with any questions.

Thank you.

Regards,

Valerie Oakley
Project Manager
Lafayette Housing Authority
Grant Administrator

P.O. Box 6687 | 2601 Greenbush St. | Lafayette, Indiana 47903-6687
(765) 771-1300 Telephone | (765) 771-1313 FAX

NEW CHAUNCEY HOUSING, INC.
2019-2020
CHDO OPERATING FUNDS AGREEMENT

This Agreement is entered into effective this _____ day of _____ 2020, by and between Lafayette Housing Consortium ("Consortium"), a Participating Jurisdiction ("PJ") under the HOME Program, and New Chauncey Housing, Inc. ("the Grantee"), an Indiana not-for-profit-corporation.

Whereas, the Consortium, composed of the City of Lafayette ("City" or "Lead Agency"), which is its lead agency, the City of West Lafayette, the Town of Battle Ground, and the County of Tippecanoe, Indiana, has received a grant allocation under Title II of the National Affordable Housing Act of 1990 from the United States Department of Housing and Urban Development ("HUD"), administered by HUD according to law and regulations found at 24 CFR Part 92, CFDA #14.239; and

Whereas, pursuant to the terms of the grant, the Consortium is required to undertake certain activities to provide and expand the supply of decent, safe, sanitary and affordable housing in its jurisdiction; and

Whereas, pursuant to a certain Agreement for Grant Administration dated September 19, 2017, by and between the City and Lafayette Housing Authority ("LHA"), LHA will serve as grant administrator for the Program; and

Whereas, LHA has certified that the Grantee meets the criteria of a Community Housing Development Organization ("CHDO").

Whereas, the Grantee desires to implement a project eligible for CHDO set aside funds as described in 24 CFR 92.300; and

Whereas, the Grantee has submitted a 2019 Agency Request for Funds Form requesting a Grant up to thirty-five thousand dollars ($35,000.00) for operating fund expenses and the Grantee is eligible to receive CHDO set aside funds for operating funds expenses as provided for in 24 CFR 92.208 and 92.300; and

Whereas, on March 20, 2019, the Consortium approved funding in the amount of nineteen thousand, four hundred twenty-six dollars ($19,426.00) for the Grantee's CHDO activities.

NOW, THEREFORE, the Consortium and the Grantee do mutually agree as follows:

I. USE OF FUNDS

A. Purpose

The Consortium agrees to fund up to nineteen thousand, four hundred twenty-six dollars ($19,426.00) to the Grantee for eligible operating expenses, as described in the Grantee's 2019 Agency Request for Funds Form which is incorporated into this Agreement by reference. A description of the tasks to be performed under this Agreement, a schedule for completing the

tasks and an estimated budget as described in the Grantee's 2019 Agency Request for Funds Form is attached as Exhibit A. The Grantee shall notify the LHA of any changes in the budget or schedule. The Grantee shall plan or implement at least one project during the 2019-2020 program year that is eligible for CHDO set-aside funds as defined at 24 CFR 92.300 and as approved by the Consortium. The Grantee hereby represents and warrants that all information contained in the 2019 Agency Request for Funds Form is true and correct and that it contains no misrepresentations, falsifications, intentional omissions, or concealment of materials facts and that all information contained, and assurances and certifications made in the 2019 Agency Request for Funds Form are incorporated into this Agreement as if fully set forth within the terms of this Agreement.

B. Eligible Operating Fund Expenses

Operating expenses means reasonable and necessary costs for the operation of the CHDO, which should be considered separately from the costs for the operation of the Grantee. Such costs include salaries, wages, and other employee compensation and benefits; employee education, training, and travel; rent, utilities, communication costs, taxes, insurance, equipment, materials, and supplies.

C. Restriction of Funds

No funds received under this Agreement may be used to establish operating reserves nor to cover operating expenses incurred by the Grantee acting as a subrecipient or contractor under the HOME or CDBG programs as specified in HOME regulations 24 CFR 92.214 and 24 CFR 92.208. Total HOME funds received in a fiscal year for operating expenses, including housing education under 24 CFR 92.302 through this agreement or agreements with other HUD intermediaries, may not exceed 50% of Grantee's total operating expenses for that fiscal year or $50,000, whichever is greater.

D. Local Match

In accordance with 24 CFR 92.218(c), CHDO operating funds are not required to be matched with local contributions to affordable housing.

II. DISBURSEMENT OF FUNDS

The Consortium agrees, upon submission of properly documented claims by the Grantee, to disburse Program funds to the Grantee monthly, up to a maximum of nineteen thousand, four hundred twenty-six dollars ($19,426.00), for eligible operating fund expenses, and in accordance with the conditions described herein. All claims for payment shall be submitted to the LHA on or before July 31, 2020, on properly executed claim forms as required by the LHA. The disbursement of funds under the Program shall be contingent upon the receipt of funds by the Consortium from HUD. Unearned payments under this Agreement may be suspended or terminated upon refusal to accept any additional conditions that may be imposed by HUD at any time or if the grant to the Consortium under the Act is suspended or terminated.

III. TIME OF PERFORMANCE

This Agreement shall cover eligible operating expenses incurred from July 1, 2019, to June 30, 2020.

IV. SUBCONTRACTING

Grantee's performance under this Agreement shall not be subcontracted, assigned, or delegated.

V. PROJECT REQUIREMENTS

The Grantee agrees to comply with the project requirements in 24 CFR Part 92 Subpart F as applicable in accordance with the type of project assisted.

VI. ADMINISTRATIVE REQUIREMENTS

A. Uniform Administrative Requirements.
The Grantee shall comply with all applicable federal administrative requirements, 2 CFR Chapter I, Chapter II, Part 200, et. al. "Uniform Administrative Requirements, Cost Principals, and Audit Requirements for Federal Awards" (Omni-Circular or Uniform Administrative Requirements) effective as of December 26, 2014.

Code of Federal Regulations (CFR) is available online at http://www.ecfr.gov/. This document is also available by request from LHA.

B. Documentation and Record-Keeping
The Grantee shall ensure that sufficient records are maintained to enable LHA to determine whether the terms of this Agreement and the requirements of 24 CFR 92.508 (a)(2)(3) and (5) have been met.

C. Retention of Records
Records shall be maintained in accordance with the requirements prescribed by HUD or LHA with respect to all matters covered by this Agreement. The Grantee shall ensure that all records pertinent to this Agreement are retained as specified in 24 CFR 92.508(c). Records must be retained for five years after the receipt of the final payment under this Agreement.

D. Reporting
At such times and in such forms as HUD or LHA may require, there shall be furnished to HUD or LHA such statements, records, data and information as HUD or LHA may request pertaining to matters covered by this Agreement.

E. Non-expendable Property

1. Inventory. The Grantee shall keep inventory records, acceptable to LHA on all non-expendable property purchased under this Agreement. The Grantee shall submit an inventory of all items at the end of the Program year and resubmit it each fiscal year with revisions as necessary.
2. Insurance and Maintenance for all Non-expendable Property Purchased Under This Agreement. The Grantee shall maintain sufficient insurance to cover the cost of replacement due to loss by fire, theft, or accidental damage. The Grantee shall also be responsible for the maintenance and upkeep of all such property.

F. Performance Monitoring

LHA will monitor the performance of the Grantee under this Agreement as required by 24 CFR 92.504 (d).

G. Audits and Inspections

All project records with respect to any matters covered by this Agreement shall be made available to the Consortium, its designees, or the Federal government, at any time during normal business hours, as often as the Consortium or LHA deems necessary, to audit, examine, and make excerpts or transcripts of all relevant data. Any deficiencies noted in the audit reports must be fully cleared by the Grantee within 30 days after receipt. Failure to comply with the above audit requirements will constitute a violation of this Agreement.

The Grantee hereby agrees to have an annual agency audit or review, whichever is applicable, conducted in accordance with current OMB policies and to submit a copy to LHA. In addition to any applicable requirements of current OMB policies, the Grantee shall separately classify and designate information regarding City of Lafayette HOME funds to include the CFDA title, number and award year.

1. Non-profit organizations that spend $750,000 or more annually in federal awards shall have a single or program-specific audit conducted for that year in accordance with 2 CFR Chapter I, Chapter II, Part 200, et. al. Program-specific audits are only allowed if the Grantee expends federal awards under only one federal program. For purposes of determining the amount of federal assistance expended, all federal assistance shall be considered, including that which is received directly from a federal agency, or passed through a state or local government, or through non-profit organizations, or any combination thereof.
2. Non-profit organizations that expend less than $750,000 annually in federal awards shall be exempt from an audit conducted in accordance with 2 CFR Chapter I, Chapter II, Part 200, et. al., although their records must be available for review (e.g., inspections, evaluations). These agencies are required by the **City** to submit "Reduced Scope" audits (e.g., financial audit, performance audits). They may choose to have a program audit conducted for each federal award in accordance with federal laws and regulation governing the program in which they participate.
3. When the requirements of 2 CFR Chapter I, Chapter II, Part 200, et. al. apply, or when the Grantee elects to comply with 2 CFR Chapter I, Chapter II, Part 200, et. al., an audit shall be conducted for each fiscal year for which the federal awards attributable to this contract have been received by the Grantee. A copy of the audit report must be completed within 9 months after the end of the fiscal year and the audit must be received by the **City** no later than 30 days of receipt of the auditor's report(s).
4. Each audit shall cover a time period of not more than twelve months and an audit shall be submitted covering each assisted period until all the assistance received from this contract has been reported.
5. If the Grantee is found in non-compliance with these audit requirements, the Grantee may be required to refund financial assistance received from the Consortium.

VII. OTHER FEDERAL OR STATE REQUIREMENTS

A. Applicability

The requirements of this section apply to all units assisted with HOME funds.

B. Religious Criteria

The Grantee hereby certifies in accordance with 24 CFR 92.257, there will be no religious or membership criteria for applicants or tenants of this Project. It further agrees that funds provided under this Agreement shall not be provided to religious organizations for any activity, including secular activities or utilized for any religious activity to promote religious interests, or for the benefit of any religious organization. The Grantee understands and certifies that HOME funds and activities must be separate (in terms of time and location) from explicitly religious activities.

C. Drug Free Workplace

The Grantee shall comply with the provisions of Title 41 Chapter 10, U.S.C., Drug-free Workplace.

D. Equal Opportunity and Fair Housing

The Grantee shall not exclude from participation in the Program, or deny benefits to any person on the grounds of race, color, national origin, religion, Vietnam-era or disabled veteran status, handicap, familial status, sex, sexual orientation, gender identity or status with regard to public assistance under the Program. In addition, the Subrecipient will comply with the following:

1. The requirements of the Fair Housing Act (42 U.S.C. 3601-20) and implementing regulations at 24 CFR 100; Executive Order 11063, as amended by Executive Order 12259 and implementing regulations issued at 24 CFR, Part 1, all of which require equal opportunity in housing and related facilities provided by Federal financial assistance;
2. The prohibitions against discrimination on the basis of age under the Age Discrimination Act of 1975 (42 U.S.C. 6101-6107) and implementing regulations at 24 CFR 146, Executive Order 11246 as amended by Executive Orders 11375, 11478, 12107 and 12086;
3. The prohibitions against discrimination against handicapped individuals under Section 504 of the Rehabilitation Act of 1973 (29 U.S.C. 794) and implementing regulations at 24 CFR8, which prohibits discrimination against the individuals with disabilities or handicaps in any Federally assisted program;
4. The requirements of Executive Order 11246 (2 CFR 1964-55, Equal Employment Opportunity), and the implementing regulations issued at 41 CFR chapter 60;
5. The Fair Housing Amendments Act of 1988, which prohibits discrimination in the sale or rental of housing on the basis of a handicap or because there are children in a family;
6. The requirements of Title IV of the Civil Rights Act of 1964 as amended, Section 104(b) and Section 109 of Title I of the Housing and Community Development Act of 1974 as amended;
7. The requirements of the Americans with Disabilities Act of 1990; and
8. The requirements of non-discrimination in employment and contracting opportunities laws, regulations, and executive orders referenced in 24 CFR 570.607, as revised by Executive Order 13279.
9. The requirements of Section 3 of the Housing and Urban Development Act of 1968 (12 U.S.C. 1701U), which requires that:
    a. The work to be performed under this contract is subject to the requirements of Section 3 of the Housing and Urban Development Act of 1968, as amended,

12 U.S.C. 1701u ("Section 3"). The purpose of Section 3 is to ensure that employment and other economic opportunities generated by HUD assistance or HUD-assisted projects covered by Section 3, shall, to the greatest extent feasible, be directed to low- and very low-income persons, particularly persons who are recipients of HUD assistance for housing.

b. The parties to this contract agree to comply with HUD's regulations in 24 CFR Part 135, which implements Section 3. As evidenced by their execution of this contract, the parties to this contract certify that they are under no contractual or other impediment that would prevent them from complying with the Part 135 regulations.
c. The contractor agrees to include this Sections 3 clause in every subcontract subject to compliance with regulations in 24 CFR Part 135, and agrees to take appropriate action, as provided in an applicable provision of the subcontract or in this Section 3 clause, upon a finding that the subcontractor is in violation of the regulations in 24 CFR Part 135. The contractor will not subcontract with any subcontractor where the contractor has notice or knowledge the subcontractor has been found in violation of regulations in 24 CFR Part 135.
d. Noncompliance with HUD's regulations in 24 CFR Part 135 may result in sanctions, termination of this contract for default, and debarment or suspension from future HUD assisted contracts.

10. The requirements of Equal Access to Housing in HUD Programs Regardless of Sexual Orientation or Gender Identity, as shown in 24 CFR Parts 5, 200, 203, 236, 400, 570, 574, 882, 891, and 982.

E. Affirmative Marketing Program

The Grantee agrees to comply with the requirements of 24 CFR 92.351 regarding following an affirmative marketing program for HOME assisted housing as described in Exhibit B.

F. Minority Business Outreach

The Grantee agrees to comply with the requirements of Executive Orders 11625, 12432 and 12138 concerning Minority and Women's Business Enterprise, which encourages the participation of minority and women owned business in the benefits of the Program by:

1. Contacting minority businesses which offer services needed by the organization in carrying out the Program with copies of any advertisements outlining information on where, when, and how to submit bids or proposals for such work; and
2. Keeping records on contracts made to minority and women businesses and any correspondence received from such businesses for any contracts let through the Program, and relaying this information to LHA.

HOME projects that are publicized in the local electronic and print media will include specific mention of the desire of the Consortium and its HOME recipients to work with women and minority business owners.

The Grantee may obtain a list of state certified minority and woman-owned businesses by contacting or visiting the website of the Minority and Women's Business Enterprises Division of the State of Indiana Department of Administration. The Grantee is also encouraged to contact other appropriate groups for assistance in identifying new businesses that are women or minority enterprises.

G. Environmental

The Grantee agrees to comply with the provisions of the National Environmental Policy Act of 1969 (NEPA) (42 U.S.C. 4321 et. Seq.) as it is applied at 24 CFR 58, including any requirements which may be imposed by LHA as a result of its responsibility for environmental review, decision making and action under NEPA.

H. Prohibition of and Elimination of Lead-Based Paint Hazards

Notwithstanding any other provision adopted by applicable governmental units, the Grantee agrees to comply with the Lead-Based Paint Poisoning Prevention Act (42 U.S.C. 4821 et. Seq.) and its regulations set forth in 24 CFR 35 concerning, but not limited to, lead hazard evaluation, lead hazard reduction , safe work practices, testing, prohibition and abatement of lead-based paint in HUD associated housing. Every contract or subcontract, including painting, pursuant to which such federally assisted construction or rehabilitation is performed, shall include appropriate provisions prohibiting the use of lead-based paint and use of safe work practices. Applicable properties assisted under this Agreement that will undergo or have undergone some renovation conducted by the Grantee or contractors hired by the Grantee shall pass a clearance examination by a qualified contractor and safe work practices shall be used by all contractors disturbing paint surfaces, regardless of funding sources for the renovation.

I. Conflict of Interest

No officer, employee, consultant, elected or appointed official of the Consortium, or its designees or agents, member of the governing body of the Consortium or the Grantee (and no one with whom they have family or business ties) who exercises any functions or responsibilities with respect to the Program during his or her tenure or for one year thereafter, shall have any personal or financial benefit, direct or indirect, in any contract or subcontract, or proceeds thereof, for work to be performed in connection with the Program assisted under this Agreement. Exceptions to these provisions may be granted on a case-by-case basis as described at 24 CFR 92.356(d) and (e). The Grantee agrees that it will incorporate into every written contract the following provisions:

> INTEREST OF CONTRACTOR AND EMPLOYEES: The Contractor covenants that no person who presently exercises any functions or responsibilities in connection with the HOME Program, and no one with whom they have family of business ties, has any financial benefit, direct or indirect, in this Contract.

J. Debarment and Suspension

The Grantee certifies that neither it, its principals, nor its contractors and subcontractors and their respective principals, are presently debarred, suspended, proposed for debarment, declared ineligible, or voluntarily excluded from participation in this transaction by the Consortium or any Federal agency.

K. Hatch Act

The Grantee agrees that no funds provided, nor personnel employed under this Agreement, shall be, in any way or to any extent, engaged in the conduct of political activities in violation of Chapter 15 of Title V U.S.C.

L. Lobbying Certification

The Grantee certifies that:

1. No Federal appropriated funds have been paid or will be paid, by or on behalf of the Grantee to any person for influencing or attempting to influence an officer or employee of any agency, a Member of Congress, an officer or employee of Congress, or an employee of a Member of Congress in connection with the awarding of any Federal contract, the making of any Federal grant, the making of any Federal loan, the entering into of any cooperative agreement, and the extension, continuation, renewal, amendment or modification of any Federal contract, grant, loan, or cooperative agreement.

2. If any funds other than Federal appropriated funds have been paid or will be paid to any person for influencing or attempting to influence an officer or employee of any agency, a Member of Congress, an officer or employee of Congress, or an employee of a Member of Congress in connection with this Federal contract, grant, loan, or cooperative agreement, the Grantee shall complete and submit Standard Form – LL, "Disclosure Form to Report Lobbying", in accordance with its instructions.

3. The Grantee shall require that the language of this certification be included in the award documents for all subawards at all tiers (including subcontracts, subgrants, and contracts under grants, loans, and cooperative agreements) and that all subrecipients shall certify and disclose accordingly.

4. This certification is a material representation of fact upon which reliance was placed when this transaction was made or entered into. Submission of this certification is a prerequisite for making or entering into this transaction which is imposed by Section 1352, Title 31, U.S.C. Any person who fails to file the required certification shall be subject to a civil penalty of not less than $10,000 and not more than $100,000 for each failure.

M. Compliance with IC 22-5-1.7 – E-Verify Program

Grantee must enroll in and verify the work eligibility status of all newly hired employees of the Grantee through the E-Verify program operated by the United States Department of Homeland Security. If the E-Verify program ceases to exist, the Grantee will not be required to verify the work eligibility status of newly hired employees through the E-Verify program. The Grantee shall execute an affidavit affirming that the Grantee has enrolled in and is participating in the E-Verify program and affirming that the Grantee does not knowingly employ an unauthorized alien.

N. Prohibition of Contracting with Businesses that Invest in Iran

For the duration of the Term of this Agreement, Grantee hereby certifies under penalties of perjury that it does not engage in investment activities in Iran as more particularly described in Indiana Code 5-22-16.5.

O. Federal Funding Accountability and Transparency Act of 2006 (FFATA)

FFATA reporting requirements will apply to any HOME Agreement in the amount of $25,000 or greater. The Grantee must provide any information needed pursuant to these requirements. This includes entity information, the unique identifier of the Grantee, the unique identifier of the

Grantee's parent if applicable, and relevant executive compensation data, if applicable. See subsection 3 below regarding executive compensation data).

1. Data Universal Numbering System (DUNS) number
   Pursuant to FFATA reporting requirements and in order to receive funding under this Agreement, the Grantee shall provide LHA with a valid Dun & Bradstreet (D&B) Data Universal Numbering System (DUNS) number that identifies the Grantee. A DUNS number may be requested online at http://fedgov.dnb.com/webform.

2. Central Contractor Registration (CCR)
   The Grantee shall register in the Central Contractor Registry (CCR), which is the primary registrant database for the US Federal Government, and shall enter any information required by FFATA into the CCR, update the information at least annually after the initial registration, and maintain its status in the CCR through the Term of this Agreement. Information regarding the process to register or update information in the CCR can be obtained at www.sam.gov.

3. Executive Compensation
   The Grantee shall report the names and total compensation of the five (5) most highly compensated officers of the Grantee in CCR if the Grantee in the preceding fiscal year received eighty percent (80%) or more of its annual gross revenues from Federal contracts and Federal financial assistance (as defined at 2 CFR 170.320) and $25,000,000 or more in annual gross revenues from Federal contracts and federal financial assistance (as defined at 2 CFR 170.320); and if the public does not have access to this information about the compensation of the senior executives of the entity through periodic reports filed under section 13(a) or 15(d) of the Securities Exchange Act of 1934 (15 U.S.C. §§ 78m(a), 78o(d)) or section 6104 of the Internal Revenue Code of 1986. The Grantee may certify that it received less than eighty percent (80%) of annual gross revenues from the federal government, received less than $25,000,000 of its annual gross revenues from the federal government, already provides executive compensation to the Securities Exchange Commission, or meets the Internal Revenue Code exemption, and will not be required to submit executive compensation data into the CCR under FFATA, provided, that the Grantee shall still register and submit the other data requested.

VIII. GENERAL CONDITIONS

A. General Compliance

The Grantee agrees to ensure compliance with all applicable federal, state, and local laws and regulations governing the funds provided under this Agreement including the requirements of the HOME program at 24 CFR 92 and pursuant regulations and policies. The Grantee has reviewed, or has had a reasonable opportunity to review, and agrees to abide by all applicable Federal rules and regulations, as amended from time to time, including but not limited to those federal rules and regulations referred to in this Agreement. Unearned payments under this Agreement may be suspended or terminated upon refusal to accept any additional conditions that may be imposed by HUD at any time or if the grant to the Consortium under the Act is suspended or terminated. References in this Agreement to particular federal or state laws, rules, regulations, and others shall include any applicable amendments thereto and replacements thereof.

B. Remedial Action

The Consortium reserves the right to require repayment of part or all HOME funds under this Agreement if required by HUD in the exercise of corrective actions regarding the use of the funds by the Grantee, as authorized under the regulations governing the HOME program, or by the Consortium for non-compliance with the terms of this Agreement.

C. Claims Against Consortium or LHA

The Grantee agrees to defend, indemnify and save harmless the Consortium and/or LHA from any and all claims of any nature whatsoever which may arise from the Grantee's performance of this Agreement; provided, however, that nothing contained in this Agreement shall be construed as rendering the Grantee liable for acts of the Consortium, its officers, agents or employees.

D. Terms of Default

If Grantee materially fails to comply with any term of this Agreement, violates any applicable Federal Statute or Regulation, or violates any assurance or certification made, said action(s) shall be considered default by the Grantee. Upon default by the Grantee, LHA shall give the Grantee 10 days written notice to cure any default. A default under this Agreement, in the discretion of the Consortium may be considered a default of any other Agreement between the Grantee and Consortium for any HOME Funds program. The failure to cure any default within 10 days may result in the Consortium taking enforcement action as described in Section VIII Paragraph E.

E. Enforcement

Upon the failure of the Grantee to cure any default, the Consortium may take one or more of the following actions:

1. Temporarily withhold cash payments, under this Agreement and/or any other Agreement between Consortium and Grantee concerning HOME Funds programs, pending correction of the deficiency by the Grantee;
2. Disallow all or part of the cost of the activity or action not in compliance;
3. Wholly or partly suspend or terminate the current award for the Grantee's program and/or any award for any other HOME Fund program funded to Grantee by the Consortium;
4. Withhold further awards for the program and/or awards for any other HOME Fund program funded to the Grantee by the Consortium;
5. Take other remedies that may be legally available or provided for in 24 CFR 85.43, including repayment of all funds provided to Grantee by the Consortium in the event the Consortium is required to repay said funds to HUD.

In addition to the enforcement actions listed above, the Consortium shall be entitled to collection of its costs and expenses, including reasonable attorney fees, incurred by the Consortium or LHA in enforcing this Agreement.

F. Suspension or Termination

Upon suspension or termination under Section VIII Paragraph E, costs of the Grantee incurred during suspension or after termination of an award are not allowable unless LHA expressly authorizes them in the notice of suspension or termination. Certain costs during suspension or after termination which are necessary and not reasonably avoidable are allowable if the conditions set forth in 24 CFR 85.43(c) are met.

G. Termination for Convenience

This Agreement may be terminated for convenience under the conditions and upon the terms set forth in 24 CFR 85.44.

H. Binding Effect

This Agreement shall be binding upon and shall inure to the benefit of the parties hereto and their respective successors and assigns; provided, however, that this Agreement may not be assigned by either party without the express written consent of the other party.

I. Entire Agreement and Invalidation.

The provisions of this agreement shall constitute a complete expression of the parties hereto. Invalidation of any one of these covenants and conditions by judgment or decree in court shall not affect any other of the provisions hereof, which shall remain in full force and effect.

J. Amendment

This Agreement may be amended at any time by mutual agreement of all parties.

K. Conditional Approval

This Agreement is conditional upon the release and receipt of HUD funding.

L. Authority to Execute

The Grantee certifies that its governing body has duly adopted as an official resolution, motion or similar action authorizing the execution of this Agreement, including all understandings and assurances contained herein; and directing and authorizing the person identified as the official representative of the Grantee to execute this Agreement.

M. Publicity and Promotion

The Consortium, LHA and Grantee mutually agree that either party is permitted to publicize and promote the activities funded under this Agreement. The Consortium, LHA and/or Grantee may host a public relations event upon completion of the activity to increase community awareness of the program and the activity.

N. Notices

Notices required by this Agreement shall be in writing and delivered via mail (postage prepaid), personal delivery or sent by electronic mail (email). Any notice delivered or sent as aforesaid shall be effective on the date of delivery or sending. All notices and other written communications under this Agreement shall be addressed to the individuals in the capacities indicated below, unless otherwise modified by subsequent written notice.

Communication and details concerning this Agreement shall be directed to the following contract representatives:

Grantee: New Chauncey Housing, Inc.
279 Littleton Street
West Lafayette, IN 47906
765-743-6244
nchidirector@gmail.com

City: City of Lafayette; ATTN: City Attorney
20 N 6th Street, Lafayette, IN 47901

LHA: Michelle Reynolds, Executive Director
Lafayette Housing Authority
PO Box 6687, Lafayette, IN 47903-6687
mreynolds@lha.lafayette.in.gov

O. Waiver

The City or LHA's failure to act with respect to a breach by the Grantee does not waive its right to act with respect to subsequent or similar breaches. The failure of the City or LHA to exercise or enforce any right or provision shall not constitute a waiver of such right or provision.

IN WITNESS WHEREOF, the City and the Grantee have executed this Agreement effective as of the date first above written.

NEW CHAUNCEY HOUSING, INC.

By: Ann Brandy
Ann Brandyberry
Title: Executive Director

Date: 1-15-2020

CITY OF LAFAYETTE, LEAD AGENCY
FOR LAFAYETTE HOUSING CONSORTIUM,
BY ITS BOARD OF PUBLIC WORKS AND SAFETY

Approved by the Board of Public Works and Safety on the _____ day of _____, 2020.

By: _____
Gary Henriott, President

By: _____
Norm Childress, Member

By: _____
Amy Moulton, Member

By: _____
Cindy Murray, Member

By: _____
Ronald Shriner, Member

ATTEST:

By: _____
Mindy Miller, Deputy Clerk

Date: _____

EXHIBIT A

PROGRAM DESCRIPTION AND TASKS
PROGRAM BUDGET
PROGRAM SCHEDULE

PROGRAM DESCRIPTION AND TASKS

Grantee is a certified CHDO. This grant will support reasonable and necessary costs to operate as a CHDO to develop and/or implement HOME-eligible projects throughout the program year.

PROGRAM BUDGET

New Chauncey Housing, Inc.

Operating Budget January 1, 2019 – December 31, 2019

Category		Amount
Salaries	$	101,000
Employee Benefits	$	14,400
Program Fees		
Memberships		
Consultants		
Rent		
Transportation		
Audit	$	9,625
Internet/Telephone	$	1,535
Directors and Officers Insurance	$	1,670
Liability Insurance	$	2,458
Supplies/Postage/Printing	$	3,050
Office Utilities	$	3,030
Total CHDO Operating Budget	**$**	**136,768**

PROGRAM SCHEDULE

July 1, 2019 to June 30, 2020

Grantee will perform tasks in the operation of a CHDO throughout the program year.

EXHIBIT B
AFFIRMATIVE MARKETING POLICY

Policy Statement

The City of Lafayette has as adopted an affirmative marketing goal for CDBG / HOME-assisted residential units to assure that individuals who might not normally apply to own or rent such properties because of their race, color, ethnicity, religion, age, sex, handicap, or familial status, know of the opportunities and feel welcome to apply for ownership or rental opportunities.

Procedures

1. Inform the Public, Potential Owners and/or Renters about Federal Fair Housing Laws and Affirmative Marketing Policies.

The City will require owners, developers, and sponsors of properties that contain CDBG / HOME-assisted housing units (hereinafter referred to as "Grantee") to implement the affirmative marketing goal of the City of Lafayette to assure that individuals who normally might not apply for CDBG / HOME-assisted units because of their race, color, ethnicity, religion, sex, handicap, or familial status: a) know of the availability of such units, b) feel welcome to apply, and c) have the opportunity to own and/or rent the units.

Agencies and Grantees using CDBG / HOME funds for housing acquisition, rehabilitation, or down payment assistance will inform the public and potential owners and/or renters of CDBG / HOME-assisted units by the use of the Equal Housing Opportunity logo or slogan in press releases, solicitations and written communications to all groups, and by posting the Equal Housing Opportunity logo in each project building or rental office.

2. Inform Public, Potential Owners and/or Renters about Available Units.

Legally binding agreements will require the Grantee to market CDBG / HOME-assisted units in an affirmative manner in order to attract renters or owners who might not normally apply to own or rent such properties, regardless of their race, color, ethnicity, religion, sex, handicap, or familial status.

While soliciting owners or renters, the Grantee shall conduct outreach efforts to reach persons least likely to apply for the housing. The solicitations and advertising shall include the Equal Housing Opportunity logo, slogan, or statement. The Fair Housing poster shall be displayed where visible to applicants. Locations or contacts for outreach include, but are not limited to:

A. Social service agencies
B. Neighborhood groups and associations
C. Local media
D. Community contacts (groups/organizations located within the housing market area)
E. Newsletters for senior citizens, disability or other special needs groups
F. Community centers
G. Places of worship

Marketing Plan Submission

For all housing projects with five (5) or more HOME-assisted units, Grantee must submit a Marketing Plan in writing to the Lafayette Community Development Department for approval within sixty (60) days of the date of the executed contract and before the first draw is released. The Marketing Plan must include the following:

1. Methods for informing the public, owners and potential tenants about fair housing laws.
2. Description of what Grantee will do to affirmatively market housing assisted with HOME funds.
3. Identification of groups in the housing market area who are least likely to apply for the housing because of its location or other factors without special outreach.
4. Description of what Grantee will do to inform persons not likely to apply for housing without special outreach.

Record Keeping

To document implementation of the Affirmative Marketing Program activities, Grantees will meet the record-keeping requirements of 24 CFR 92.508(a)5(i) and (ii) and 92.351 concerning racial, ethnic, and gender characteristics, and maintain the following records:

1. Complete demographic characteristics of all applicants.
2. Grantee's written acknowledgement of fair housing notice and laws.
3. Record of contact with applicants.
4. Copies of notices to social service agencies, neighborhood and other groups specified above.
5. Copies of press releases, media coverage, mailings, and other pertinent information.

Assessment and Corrective Action

The City will assess the affirmative marketing efforts for effectiveness using the following steps. If corrective action is necessary, the City will work closely with the Grantee until the issues are resolved.

1. To determine if good faith efforts have been made, the City will periodically compare the information contained in the records with actions taken to implement the affirmative marketing efforts.
2. To determine results, the City will examine whether persons from all racial and ethnic groups in the community either were aware of or applied for units that were affirmatively marketed.
3. The City may periodically perform ownership and/or tenant surveys to determine the source of referrals.
4. If it is determined that the Grantee has not affirmatively marketed the program, corrective actions may be required. These may include an initial conference to discuss required changes, possible disqualification from future participation in CDBG / HOME programs and/or legal action.

ALLOWANCE OF VOUCHERS

I HEREBY CERTIFY THAT EACH OF THE ABOVE LISTED VOUCHERS AND THE INVOICES, OR BILLS ATTACHED THERETO, ARE TRUE AND CORRECT AND I HAVE AUDITED SAME IN ACCORDANCE WITH IC 5-11-10-1.6.

_____, 20 _____. _____

Fiscal Officer

WE HAVE EXAMINED THE VOUCHERS LISTED ON THE FOREGOING ACCOUNTS PAYABLE VOUCHER REGISTER, CONSISTING OF 16 PAGES, AND EXCEPT FOR VOUCHERS NOT ALLOWED AS SHOWN ON THE REGISTER, SUCH VOUCHERS ARE HEREBY ALLOWED IN THE TOTAL AMOUNT OF $6,451,368.13 DATED THIS DAY OF JANUARY 21, 2020. APPROVED BY STATE BOARD OF ACCOUNTS IN 2000 FOR THE CITY OF LAFAYETTE.

_____ _____

_____ _____

_____ _____

_____ _____

Invoices to be Approved 1/21/2020

Payroll						
Regions Bank	$	849,532.69				
Chase Bank	$	1,802,729.71				
Horizon Bank	$	509,729.56				
			$	3,161,991.96		
Manuals/Wires						
Horizon Bank	$	69,753.10				
			$	69,753.10		
Invoices						
Chase Bank	$	280,169.75				
Horizon Bank	$	565,072.36				
Old National Water Bond	$	1,264,035.33				
The Bank of New York SRF 2009#3	$	53,742.50				
First Merchants Sewer 2008	$	195,303.13				
First Merchants Sewer 2016	$	861,300.00				
Total Invoices			$	3,219,623.07		
Grand Total					$	6,451,368.13

Board List by Voucher

Board: PR011720 1/17/2020

Cash Account / Bank: 101012 - Cash - Regions Pay Gross

Vendor	Vendor Name	Invoice	Type	Due Date	Amount	Comment
3652	IND DEPT OF REVENUE	98578	INV	1/17/2020	62,906.33	Payroll Run X - Warrant 120619
3652	IND DEPT OF REVENUE	99504	INV	1/17/2020	61,010.42	Payroll Run X - Warrant 122019
3652	IND DEPT OF REVENUE	99803	INV	1/17/2020	11,131.19	Payroll Run X - Warrant 123119
2258	LAFAYETTE NEIGHBORHOOD HOUSING SERVICES INC	100681	INV	1/17/2020	930.76	Payroll Run 1 - Warrant 011720
3606	YOUNG MENS CHRISTIAN ASSOCIATION OF LAFAYETTE	100682	INV	1/17/2020	1,274.67	Payroll Run 1 - Warrant 011720
3653	INTERNAL REVENUE SERVICE	100683	INV	1/17/2020	267,544.17	Payroll Run 1 - Warrant 011720
3667	PERF	100684	INV	1/17/2020	116,753.13	Payroll Run 1 - Warrant 011720
3685	TIPPECANOE COUNTY GOVERNMENT	100685	INV	1/17/2020	446.52	Payroll Run 1 - Warrant 011720
3692	LAFAYETTE FIRE FIGHTERS	100686	INV	1/17/2020	6,931.26	Payroll Run 1 - Warrant 011720
3695	UNITED WAY GREATER LAFAYETTE	100687	INV	1/17/2020	611.38	Payroll Run 1 - Warrant 011720
3705	NATIONWIDE RETIREMENT SOLUTIONS INC	100688	INV	1/17/2020	27,186.58	Payroll Run 1 - Warrant 011720
3715	FOP ARMAN LODGE #49	100689	INV	1/17/2020	1,408.00	Payroll Run 1 - Warrant 011720
7162	IND CHILD SUPPORT BUREAU	100690	INV	1/17/2020	6,331.60	Payroll Run 1 - Warrant 011720
9323	PERF POLICE AND FIRE	100691	INV	1/17/2020	163,412.43	Payroll Run 1 - Warrant 011720
9419	UNITED HEALTH GROUP DBA OPTUM	100692	INV	1/17/2020	102,469.93	Payroll Run 1 - Warrant 011720
10292	CLUB NEWTONE INC	100693	INV	1/17/2020	410.00	Payroll Run 1 - Warrant 011720
10652	AMER FIDELITY ASSURANCE-FLEX	100694	INV	1/17/2020	79.16	Payroll Run 1 - Warrant 011720
14521	GREAT-WEST LIFE & ANNUITY INSURANCE COMPANY	100695	INV	1/17/2020	18,695.16	Payroll Run 1 - Warrant 011720
			Board Total		**849,532.69**	

Board List by Voucher

Board: PR011720 1/16/2020

Cash Account / Bank: 101001 - Cash - Chase Operating 1201

Vendor	Vendor Name	Invoice	Type	Due Date	Amount	Comment
579	CITY OF LAFAYETTE GROSS/PT/BEN	GEN PR 011720	INV	1/16/2020	1,802,729.71	GROSS/TAXES/BENEFITS FOR 1/17/20
			Board Total		**1,802,729.71**	

Printed By: pking

2

Board List by Voucher

Board: PR011720 1/16/2020

Cash Account / Bank: 101080 - Cash-Horizon Utilities Op

Vendor	Vendor Name	Invoice	Type	Due Date	Amount	Comment
579	CITY OF LAFAYETTE GROSS/PT/BEN	W/S PR 011720	INV	1/16/2020	509,729.56	GROSS/TAXES/BENEFITS FOR 1/17/20
			Board Total		**509,729.56**	

Printed By: pking

3

Board List by Voucher

Board: BW122119 12/20/2019

Cash Account / Bank: 101080 - Cash-Horizon Utilities Op

Vendor	Vendor Name	Invoice	Type	Due Date	Amount	Comment
3652	IND DEPT OF REVENUE	4TH QTR 2019	INV	12/20/2019	27,500.00	UTILITY RECIEPT TAX FOR 4TH QTR 2019
3652	IND DEPT OF REVENUE	UBO SALES TAX 11/19	INV	12/20/2019	42,253.10	UBO SALES TAX FOR NOV 2019
			Board Total		**69,753.10**	

4

Board List by Voucher

Board: BW012120 1/21/2020

Cash Account / Bank: 101001 - Cash - Chase Operating 1201

Vendor	Vendor Name	Invoice	Type	Due Date	Amount	Comment
10745	THE SHERWIN WILLIAMS COMPANY	5218-4	INV	1/21/2020	9.79	MATERIAL FOR WINTERIZING PAINT MACHINE
8681	CINTAS CORPORATION NO 2	4037875006	INV	1/21/2020	194.05	UNIFORMS FLEET
10096	POMP'S TIRE SERVICE INC	910104015	INV	1/21/2020	127.50	AUTO PARTS 450
3446	WIERS INTERNATIONAL TRUCKS	20P41280	INV	1/21/2020	76.69	AUTO PARTS FD5
2770	ROWE TRUCK EQUIPMENT INC	279821	INV	1/21/2020	113.56	AUTO PARTS 344
16253	PAUL KUBON	12112019	INV	1/21/2020	164.30	REIMBURSEMENT FOR TRAVEL
1700	LAFAYETTE WAREHOUSE INC	02QL0283	INV	1/21/2020	53.94	AUTO PARTS 15141
12028	LOWER GREAT LAKES KENWORTH	LAFIN655817	INV	1/21/2020	846.47	AUTO PARTS 14128
12028	LOWER GREAT LAKES KENWORTH	LAFCM5536488	CRM	1/21/2020	-68.75	CREDIT
12028	LOWER GREAT LAKES KENWORTH	LAFCM5537707	CRM	1/21/2020	-424.26	CREDIT
2770	ROWE TRUCK EQUIPMENT INC	279855	INV	1/21/2020	161.08	AUTO PARTS STOCK
2770	ROWE TRUCK EQUIPMENT INC	279874	CRM	1/21/2020	-13.00	CREDIT
1740	SCHEID DIESEL SERVICE CO INC	L538913	INV	1/21/2020	288.59	AUTO PARTS 14128
5253	MOTION INDUSTRIES INC	IN11-389747	INV	1/21/2020	48.92	AUTO PARTS STOCK
9336	ADVANCE REPAIR & MACHINING INC	I-38978	INV	1/21/2020	226.86	AUTO PARTS 14129
7704	CHOSNEK LAW, P.C.	15119	INV	1/21/2020	1,272.00	LEGAL SERVICES ENGINEERING
5125	D&D NAPA INC	717790	INV	1/21/2020	21.64	AUTO PARTS 15143
790	DEFOUW CHEVROLET INC	5020401	INV	1/21/2020	4.92	AUTO PARTS 332
375	BEST EQUIPMENT CO INC	SI196401	INV	1/21/2020	332.90	AUTO PARTS STOCK
14102	DDJS LLC	5760	INV	1/21/2020	20.00	AUTO PARTS STOCK
8843	TEMCO MACHINERY INC	AG73996	INV	1/21/2020	365.75	AUTO PARTS FD87

Board List by Voucher

Board: BW012120 1/21/2020

Cash Account / Bank: 101001 - Cash - Chase Operating 1201

1700	LAFAYETTE WAREHOUSE INC	02QL1734	INV	1/21/2020	93.41	AUTO PARTS
1700	LAFAYETTE WAREHOUSE INC	02QL2481	CRM	1/21/2020	-93.41	CREDIT
12028	LOWER GREAT LAKES KENWORTH	LAFIN657106	INV	1/21/2020	124.94	AUTO PARTS 14127
9336	ADVANCE REPAIR & MACHINING INC	I-39004	INV	1/21/2020	454.60	AUTO PARTS 15143
250	B & M ELECTRICAL CO INC	W67829	INV	1/21/2020	30.77	AUTO PARTS 31154
14215	INDUSTRIAL FINISHES & SYSTEMS INC	2625167-1	INV	1/21/2020	19.64	AUTO PARTS 2500
8643	STELLO PRODUCTS INC	29784	INV	1/21/2020	1,287.63	GREEN U CHANNEL POSTS FOR TRAFFIC
790	DEFOUW CHEVROLET INC	6037094	INV	1/21/2020	99.87	FUEL INJECTOR CLEANING 523
790	DEFOUW CHEVROLET INC	8006794	INV	1/21/2020	114.00	REMOVE BED BUGS 16-15
2658	MIKE RAISOR FORD INC	5013243	INV	1/21/2020	10.55	AUTO PARTS 17-14
10674	RPM MACHINERY LLC	P21029	INV	1/21/2020	190.40	AUTO PARTS 450
8681	CINTAS CORPORATION NO 2	4038398796	INV	1/21/2020	184.53	UNIFORMS FLEET
1700	LAFAYETTE WAREHOUSE INC	02QL2014	INV	1/21/2020	1,012.80	FLUIDS FOR STOCK
1700	LAFAYETTE WAREHOUSE INC	02QL3394	INV	1/21/2020	93.41	AUTO PARTS
1700	LAFAYETTE WAREHOUSE INC	02QL2047	CRM	1/21/2020	-93.41	CREDIT
12810	GENERAL PETROLEUM INC	631519	INV	1/21/2020	1,986.60	OIL FOR STOCK
1509	JIM'S GARAGE INC	513984	INV	1/21/2020	30.00	TOWING 17-19
7080	NEWTON OIL COMPANY INC	085865	INV	1/21/2020	223.60	FLOOR DRY FOR #7
8681	CINTAS CORPORATION NO 2	4038395252	INV	1/21/2020	41.66	RUGS FOR TC
3446	WIERS INTERNATIONAL TRUCKS	2032943	INV	1/21/2020	225.10	DIAGNOSE ENGINE 31156
596	CLARK TRUCK EQUIPMENT CO INC	55397	INV	1/21/2020	164.00	AUTO PARTS STOCK

6

Board List by Voucher

Board: BW012120 1/21/2020

Cash Account / Bank: 101001 - Cash - Chase Operating 1201

1780	LAFAYETTE HARDWARE INC	3138305	INV	1/21/2020	4.50	AUTO PARTS STOCK
15873	GENERAL TRUCK PARTS & EQUIPMENT	02 584144	INV	1/21/2020	2,208.90	AUTO PARTS 15143
9337	STATE OF INDIANA	2020 FEE IN1991	INV	1/21/2020	350.00	2020 LESO ANNUAL FEE IN1991
30	ACE FIRE EXTINGUISHER CORP	100608	INV	1/21/2020	1,356.37	ANNUAL FIRE EXTINGUISHER INSPECTIONS FIRE
790	DEFOUW CHEVROLET INC	6036213	INV	1/21/2020	511.36	REPAIR ENGINE 523
12085	WAYMIRE'S AUTO PARTS & SERVICE INC	784	INV	1/21/2020	1,723.02	AUTO PARTS FD38
7794	ASPHALT MATERIALS INC	8013218716	INV	1/21/2020	264.12	APME
480	CDK REFRIGERATION	20JAN632	INV	1/21/2020	55.00	ICE MACHINE RENT
11220	COMPASS MINERALS AMERICA INC	561031	INV	1/21/2020	10,234.96	ROAD SALT
7080	NEWTON OIL COMPANY INC	085735	INV	1/21/2020	894.40	FLOOR DRY FOR STREET
8681	CINTAS CORPORATION NO 2	4038398704	INV	1/21/2020	293.99	UNIFORMS/SUPPLIES STREET
8681	CINTAS CORPORATION NO 2	4038398431	INV	1/21/2020	165.04	UNIFORMS/SUPPLIES SANITATION
8681	CINTAS CORPORATION NO 2	4037874816	INV	1/21/2020	295.02	UNIFORMS/SUPPLIES STREET
8681	CINTAS CORPORATION NO 2	4037874694	INV	1/21/2020	165.04	UNIFORMS/SUPPLIES SANITATION
1530	JOURNAL & COURIER	408803765 112319	INV	1/21/2020	26.00	MONTHLY SUBSCRIPTION 112319-122219
250	B & M ELECTRICAL CO INC	W67548	INV	1/21/2020	359.69	AUTO PARTS STOCK
1784	LAFAYETTE HOUSING AUTHORITY	TBRA 2018-10	INV	1/21/2020	4,697.42	#1321H RENT ASST DEC 2019
1784	LAFAYETTE HOUSING AUTHORITY	FRESH START 2018-10	INV	1/21/2020	3,206.39	#1319H RENT ASST DECEMBER 2019
1784	LAFAYETTE HOUSING AUTHORITY	2019-35	INV	1/21/2020	2,230.70	#1326C ADMIN EXPENSE OCT-DEC 2019
1784	LAFAYETTE HOUSING AUTHORITY	2019-36	INV	1/21/2020	6,728.95	#1326C & #1337C ADMIN EXP NOV-DEC 2019

Board List by Voucher

Board: BW012120 1/21/2020

Cash Account / Bank: 101001 - Cash - Chase Operating 1201

1784	LAFAYETTE HOUSING AUTHORITY	2019-37	INV	1/21/2020	1,613.02	#1328H ADMIN EXP OCT-DEC 2019
1784	LAFAYETTE HOUSING AUTHORITY	2019-38	INV	1/21/2020	7,607.76	#1328H ADMIN EXP NOV-DEC 2019
1530	JOURNAL & COURIER	408803765 122319	INV	1/21/2020	34.00	MONTHLY SUBSCRIPTION 122319-012220
7704	CHOSNEK LAW, P.C.	15399	INV	1/21/2020	238.50	LEGAL SERVICES RD-DEC 2019
13196	PRO AIR MIDWEST LLC	8036	INV	1/21/2020	2,680.00	ANNUAL NFPA SERVICE AGREEMENT FOR FIRE
572	GREATER LAFAYETTE PUBLIC TRANSPORTATION	0000024927	INV	1/21/2020	140.00	BUS PASSES-DEC 2019
8681	CINTAS CORPORATION NO 2	4037317273	INV	1/21/2020	10.00	UNIFORM RENTAL FACILITIES
8681	CINTAS CORPORATION NO 2	4037874652	INV	1/21/2020	10.00	UNIFORM RENTAL FACILITIES
8681	CINTAS CORPORATION NO 2	4038398285	INV	1/21/2020	10.00	UNIFORM RENTAL FACILITIES
11013	TYLER TECHNOLOGIES INC	045-286162	INV	1/21/2020	21,363.74	DISASTER RECOVERY CONTRACT FOR ERP SYSTEM
11206	CIVICPLUS LLC	193788	INV	1/21/2020	6,729.12	ANNUAL MAINTENANCE FOR CITY WEBSITE ALL DEPTS
12727	T-N-T TREE SERVICE LLC	4265	INV	1/21/2020	1,100.00	TREE REMOVAL AT 1403 CENTRAL STREET
3573	WINTEK CORPORATION	165268	INV	1/21/2020	10,625.10	FIBER SWITCH FOR CONCORD & BRADY; MAIN & KOSSUTH
15905	TRAFFIC CONTROL PRODUCTS INC	38536	INV	1/21/2020	230.00	BRACKET FOR BROKEN SIGNAL HEADS
7981	NEW AQUA LLC	PSI-3968948	INV	1/21/2020	31.90	STREET & SAN 5 GAL WATER
7981	NEW AQUA LLC	PSI-3968977	INV	1/21/2020	31.90	HR & UBO 5 GAL WATER
12179	PETSMART INC 508	8428050810112 292019	INV	1/21/2020	54.99	DOG FOOD-LEROUX
7026	VERIZON WIRELESS-MUNCIPAL	9844918826	INV	1/21/2020	5,999.71	LPD MONTHLY PHONE BILL
7026	VERIZON WIRELESS-MUNCIPAL	9844944569	INV	1/21/2020	3,121.10	LPD MONTHLY PHONE BILL
10658	DR ELIZABETH M HOLMES DVM	521765	INV	1/21/2020	72.00	K9 BOARDING-JOERI

Board List by Voucher

Board: BW012120 1/21/2020

Cash Account / Bank: 101001 - Cash - Chase Operating 1201

14111	VCA ANIMAL HOSPITALS INC	280355657	INV	1/21/2020	34.51	K9 MEDICAL TEST-ROY
15895	DAVISTA TECHNOLOGIES LLC	LPD-1001	INV	1/21/2020	10,466.00	THREE MONTH PILOT OF HEIMDALL TECHNOLOGY
12321	AMERICAN POLYGRAPH ASSOCIATION	22015	INV	1/21/2020	150.00	2020 MEMBERSHIP RENEWAL-KEVIN MILER
12321	AMERICAN POLYGRAPH ASSOCIATION	21258	INV	1/21/2020	150.00	2020 MEMBERSHIP RENEWAL-MARK PINKARD
5401	RICOH USA INC	5058462583	INV	1/21/2020	656.04	LPD RECORDS COPIER CHARGERS
13018	TARGETSOLUTIONS LEARNING LLC	TSINV00000033 519	INV	1/21/2020	9,541.40	TARGETSOLUTIONS TRACKING PLATFORM & MAINTENANCE
13413	INTERNATIONAL IDENTIFICATION INC	39512	INV	1/21/2020	78.22	2020 PET TAGS
9500	MUNICIPAL CODE CORPORATION	00337032	INV	1/21/2020	475.00	MUNICODE ADMINISTRATIVE SUPPORT FEE
2330	NORFOLK & SOUTHERN CORPORATION	91315186	INV	1/21/2020	1,975.00	ANNUAL MAINT FEE S 9TH STREET
2330	NORFOLK & SOUTHERN CORPORATION	91315185	INV	1/21/2020	1,975.00	ANNUAL MAINT FEE 18TH STREET
2330	NORFOLK & SOUTHERN CORPORATION	91315181	INV	1/21/2020	1,975.00	ANNUAL MAINT FEE BECK LANE
2330	NORFOLK & SOUTHERN CORPORATION	91315184	INV	1/21/2020	1,975.00	ANNUAL MAINT FEE S 4TH STREET (POLAND HILL RD)
2145	MILESTONE CONTRACTORS LP	172046-04	INV	1/21/2020	32,800.00	FINAL INVOICE-SOUTH AND COLUMBIA ST RESURFACING
8230	CITY OF LAFAYETTE-WORKMANS COM	WC 202001	INV	1/21/2020	27,500.00	WORK COMP JAN 2020
9453	BEST WAY OF INDIANA INC	1000035933	INV	1/21/2020	81,541.55	TIPPING FEES
9804	MAILFINANCE INC	N8050231	INV	1/21/2020	641.88	POSTAGE MACHINE
7026	VERIZON WIRELESS-MUNCIPAL	9844869890	INV	1/21/2020	487.80	MONTHLY CHARGES FIRE/WATER

Board List by Voucher

Board: BW012120 1/21/2020

Cash Account / Bank: 101001 - Cash - Chase Operating 1201

16494	AARON HOWARD	79D041906CM2518	INV	1/21/2020	250.00	COURT ORDER LPD CASE 19-7085
			Board Total		**280,169.75**	

Board List by Voucher

Board: BW012120 1/21/2020

Cash Account / Bank: 101080 - Cash-Horizon Utilities Op

Vendor	Vendor Name	Invoice	Type	Due Date	Amount	Comment
2053	MACALLISTER MACHINERY CO INC	S2177005	INV	1/21/2020	4,721.01	REPAIR GENERATOR AT WATERSTONE LS
2053	MACALLISTER MACHINERY CO INC	S2202904	CRM	1/21/2020	-4,721.01	WRONG AMOUNT INVOICED ON S2177005
8681	CINTAS CORPORATION NO 2	4038398482	INV	1/21/2020	68.64	UNIFORMS - RENEW
8681	CINTAS CORPORATION NO 2	4038398691	INV	1/21/2020	261.99	UNIFORMS - RENEW
2053	MACALLISTER MACHINERY CO INC	MS2245460	INV	1/21/2020	61,925.00	REPLACE GENERATOR AT 550 EAST LS
2053	MACALLISTER MACHINERY CO INC	MS2245514	INV	1/21/2020	64,253.00	ADD GENERATOR AT WILDCAT VALLEY LS
2053	MACALLISTER MACHINERY CO INC	S2235119	INV	1/21/2020	5,552.36	REPAIR GENERATOR AT WATERSTONE LS
7381	INDIANA UNDERGROUND PLANT PROTECTION	80977-R	INV	1/21/2020	505.40	1/2 MONTHLY PER TICKET LOCATE FEE NOVEMBER 2019
6419	ONE SOURCE EQUIPMENT RENTALS INC	1110618-0001	INV	1/21/2020	1,081.84	FINN FORM FOR TRENCH BOX
14330	VS ENGINEERING INC	406803	INV	1/21/2020	1,065.25	9TH & KOSSUTH/CENTRAL & 18TH-DRAINAGE IMPROVEMEN
1232	GREELEY AND HANSEN LLC	INV-0000612080	INV	1/21/2020	18,460.17	9TH STORM WATER PUMP STATION DESIGN
1232	GREELEY AND HANSEN LLC	INV-0000612078	INV	1/21/2020	11,402.38	DIGESTER GAS UTILIZATION STUDY
1232	GREELEY AND HANSEN LLC	INV-0000612074	INV	1/21/2020	27,737.83	GREENBUSH CSO STORAGE TANK
1232	GREELEY AND HANSEN LLC	INV-0000611993	INV	1/21/2020	14,304.66	WILLIAMS ST SEWER DESIGN AND CONSTRUCTION SERVICE
7658	BOWEN ENGINEERING CORPORATION	14-19-045-6	INV	1/21/2020	319,339.00	9TH STREET PUMP STATION
9024	BRENNTAG MID-SOUTH INC	BMS467943	INV	1/21/2020	4,897.44	FERRIC FOR TREATMENT
6811	CITY OF LAFAYETTE	JAN 2020	INV	1/21/2020	1,800.00	JANUARY UBO RENT

Printed By: pking

Board List by Voucher

Board: BW012120 1/21/2020

Cash Account / Bank: 101080 - Cash-Horizon Utilities Op

7698	DENNEY EXCAVATING INC	5526	INV	1/21/2020	950.00	REFUND OF HYDRANT METER DEPOSIT
16193	GRW ENGINEERS INC	0053834	INV	1/21/2020	2,219.58	CHEMICAL FEED DESIGN CANAL
8681	CINTAS CORPORATION NO 2	4038398918	INV	1/21/2020	128.17	UNIFORMS WWPL
13759	KEVIN W BROWN	244485413	INV	1/21/2020	35.00	CDL RENEWAL REIMBUSEMENT
14891	IRTH SOLUTIONS LLC	SIR005744	INV	1/21/2020	131.00	DECEMBER TICKETS PROCESSED
375	BEST EQUIPMENT CO INC	PSI002117	INV	1/21/2020	23,433.99	VAC TRUCK REPAIR UNIT #453
7381	INDIANA UNDERGROUND PLANT PROTECTION	80977	INV	1/21/2020	505.40	NOVEMBER LOCATE TICKETS WWPL
14531	WATERCO OF THE CENTRAL STATES INC	0425615	INV	1/21/2020	30.00	DI TANK RENTALS JAN'20
14531	WATERCO OF THE CENTRAL STATES INC	121980 1/20	INV	1/21/2020	30.00	SOFTENER TANK RENTALS 1/20
13117	BRICKMAN ACQUISITION HOLDINGS INC	6661158	INV	1/21/2020	360.00	MAINTENANCE SAGAMORE BIOSWALE
11294	MCCROMETER INC	532117 RI	INV	1/21/2020	2,527.08	REPAIR TO FLOW METER
23	A & L GREAT LAKES LABORATORIES INC	0114468-IN	INV	1/21/2020	523.56	SOIL SAMPLE ANALYSIS
14944	RAILROAD MANAGEMENT COMPANY IV LLC	403699	INV	1/21/2020	514.54	LICENSE FEE SEWER PIPE
14944	RAILROAD MANAGEMENT COMPANY IV LLC	403701	INV	1/21/2020	514.54	LICENSE FEE SEWER PIPE
14944	RAILROAD MANAGEMENT COMPANY IV LLC	403700	INV	1/21/2020	514.54	LICENSE FEE WATER PIPE
			Board Total		**565,072.36**	

Printed By: pking

12

CITY OF LAFAYETTE

Board List by Voucher

Board: BW012120 1/21/2020

Cash Account / Bank: 101505 - ONB Water Bond 2018

Vendor	Vendor Name	Invoice	Type	Due Date	Amount	Comment
7658	BOWEN ENGINEERING CORPORATION	14-19-059-3	INV	1/21/2020	573,404.40	MURDOCK PARK BOOSTER STATION
7658	BOWEN ENGINEERING CORPORATION	14-19-059-4	INV	1/21/2020	630,359.10	MURDOCK PARK BOOSTER STATION
9160	BUTLER, FAIRMAN & SEUFERT INC	87619	INV	1/21/2020	14,635.00	WATER TOWER-CR430 SOUTH
8389	WESSLER ENGINEERING INC	34591	INV	1/21/2020	7,084.41	4TH ST WATERMAIN REPLACEMENT
8389	WESSLER ENGINEERING INC	34589	INV	1/21/2020	38,552.42	MURDOCK PARK-WATER BOND
			Board Total		**1,264,035.33**	

Printed By: pking

13

Board List by Voucher

Board: BW010120 1/1/2020

Cash Account / Bank: 101077 - Cash - BONY Bond and

Vendor	Vendor Name	Invoice	Type	Due Date	Amount	Comment
7830	THE BANK OF NEW YORK TRUST CO	SRF2009#3 0120	INV	1/1/2020	53,742.50	SRF #3 BOND & INTEREST PAYMENT
			Board Total		**53,742.50**	

Board List by Voucher

Board: BW010120 1/1/2020

Cash Account / Bank: 101097 - Cash - MT WPC 08 Redemp

Vendor	Vendor Name	Invoice	Type	Due Date	Amount	Comment
8786	CEDE & CO C/O MERCHANTS TRUST	2008SEW 0120	INV	1/1/2020	195,303.13	BOND & INTEREST WASTEWATER BONDS 2008
			Board Total		**195,303.13**	

Board List by Voucher

Board: BW010120 1/1/2020

Cash Account / Bank: 101668 - Cash - MT WPC Ref 16 9227

Vendor	Vendor Name	Invoice	Type	Due Date	Amount	Comment
8786	CEDE & CO C/O MERCHANTS TRUST	2016SEW 0120	INV	1/1/2020	861,300.00	BOND & INTEREST SEWER REF BOND 2016
			Board Total		**861,300.00**	

Printed By: pking

120

CITY OF
LAFAYETTE

Columbia Street Banner Application

Please complete this application to request a banner across Columbia Street, between 3rd and 4th Street, in downtown Lafayette. Banners are hung for a two-week period. While we will do our best to accommodate your request, please be aware that with an abundance of community event banners we may not be able to give you the dates that you have requested. If the exact dates you requested are unavailable, we will contact you to find an agreeable solution.

There are a few steps we would like to make you aware of to make the process simple. Please follow the checklist below. As always, you may contact us with any questions.

1. Contact the City of Lafayette Clerk's Office to schedule installation. Banners are only installed and removed on Tuesday, so please schedule your dates accordingly. Please drop off the banner at the City of Lafayette Traffic Department located at 258 S. 3rd Street 765-807-1401 two (2) weeks prior to the date you would like to have the banner hung.

2. Request approval from the Lafayette Board of Works and Public Safety, (765) 807-1021.

3. Contact your insurance agent to request a Certificate of Insurance to be provided to the City of Lafayette Clerks Department.

4. Banner size is 4'X30', should be double sided and have grommets. A variety of local printing and graphics companies are available for printing, visit http://www.greaterlafayettecommerce.com/members/ and look for banners or printing.

5. **Installation Fee:** There is a $50 installation fee due at the time of submission to the City Clerk's Office.

Name: Anita Trent

Organization: Be Moved Power Yoga, Inc.

Dates of Request: 6/2/20 – 6/16/20

Address: 3451 Wyndham Way, Suite B West Laf, IN 47906

Phone: 765.490.8877 Email: anitaftrent@gmail.com

*No political banner will be accepted.

CERTIFICATE OF LIABILITY INSURANCE

DATE (MM/DD/YYYY): 01/09/2020

THIS CERTIFICATE IS ISSUED AS A MATTER OF INFORMATION ONLY AND CONFERS NO RIGHTS UPON THE CERTIFICATE HOLDER. THIS CERTIFICATE DOES NOT AFFIRMATIVELY OR NEGATIVELY AMEND, EXTEND OR ALTER THE COVERAGE AFFORDED BY THE POLICIES BELOW. THIS CERTIFICATE OF INSURANCE DOES NOT CONSTITUTE A CONTRACT BETWEEN THE ISSUING INSURER(S), AUTHORIZED REPRESENTATIVE OR PRODUCER, AND THE CERTIFICATE HOLDER.

IMPORTANT: If the certificate holder is an ADDITIONAL INSURED, the policy(ies) must have ADDITIONAL INSURED provisions or be endorsed. If SUBROGATION IS WAIVED, subject to the terms and conditions of the policy, certain policies may require an endorsement. A statement on this certificate does not confer rights to the certificate holder in lieu of such endorsement(s).

PRODUCER

HARRELL & KLINE INSURANCE
2826 THEATER AVE
HUNTINGTON, IN 46750

CONTACT NAME: MATT HOGAN
PHONE (A/C, No, Ext): 260-358-1792 FAX (A/C, No): 260-358-1795
E-MAIL ADDRESS: MHOGAN@HARRELLFIN.COM

INSURER(S) AFFORDING COVERAGE	NAIC #
INSURER A : WEST BEND MUTUAL INSURANCE	
INSURER B :	
INSURER C :	
INSURER D :	
INSURER E :	
INSURER F :	

INSURED

BE MOVED POWER YOGA, LLC
3451 WYNDHAM WAY STE C
WEST LAFAYETTE, IN 47906

COVERAGES **CERTIFICATE NUMBER:** **REVISION NUMBER:**

THIS IS TO CERTIFY THAT THE POLICIES OF INSURANCE LISTED BELOW HAVE BEEN ISSUED TO THE INSURED NAMED ABOVE FOR THE POLICY PERIOD INDICATED. NOTWITHSTANDING ANY REQUIREMENT, TERM OR CONDITION OF ANY CONTRACT OR OTHER DOCUMENT WITH RESPECT TO WHICH THIS CERTIFICATE MAY BE ISSUED OR MAY PERTAIN, THE INSURANCE AFFORDED BY THE POLICIES DESCRIBED HEREIN IS SUBJECT TO ALL THE TERMS, EXCLUSIONS AND CONDITIONS OF SUCH POLICIES. LIMITS SHOWN MAY HAVE BEEN REDUCED BY PAID CLAIMS.

INSR LTR	TYPE OF INSURANCE	ADDL INSD	SUBR WVD	POLICY NUMBER	POLICY EFF (MM/DD/YYYY)	POLICY EXP (MM/DD/YYYY)	LIMITS	
A	[X] COMMERCIAL GENERAL LIABILITY [ ] CLAIMS-MADE [X] OCCUR GEN'L AGGREGATE LIMIT APPLIES PER: [ ] POLICY [ ] PRO-JECT [ ] LOC OTHER:			A237495	02/01/2020	02/01/2021	EACH OCCURRENCE	$ 1,000,000
							DAMAGE TO RENTED PREMISES (Ea occurrence)	$ 200,000
							MED EXP (Any one person)	$ 10,000
							PERSONAL & ADV INJURY	$ 1,000,000
							GENERAL AGGREGATE	$ 3,000,000
							PRODUCTS - COMP/OP AGG	$ 3,000,000
								$
	AUTOMOBILE LIABILITY [ ] ANY AUTO [ ] OWNED AUTOS ONLY [ ] SCHEDULED AUTOS [ ] HIRED AUTOS ONLY [ ] NON-OWNED AUTOS ONLY						COMBINED SINGLE LIMIT (Ea accident)	$
							BODILY INJURY (Per person)	$
							BODILY INJURY (Per accident)	$
							PROPERTY DAMAGE (Per accident)	$
								$
	[ ] UMBRELLA LIAB [ ] OCCUR [ ] EXCESS LIAB [ ] CLAIMS-MADE [ ] DED [ ] RETENTION $						EACH OCCURRENCE	$
							AGGREGATE	$
								$
	WORKERS COMPENSATION AND EMPLOYERS' LIABILITY ANYPROPRIETOR/PARTNER/EXECUTIVE OFFICER/MEMBER EXCLUDED? Y/N [ ] (Mandatory in NH) If yes, describe under DESCRIPTION OF OPERATIONS below		N/A				PER STATUTE / OTH-ER	
							E.L. EACH ACCIDENT	$
							E.L. DISEASE - EA EMPLOYEE	$
							E.L. DISEASE - POLICY LIMIT	$

DESCRIPTION OF OPERATIONS / LOCATIONS / VEHICLES (ACORD 101, Additional Remarks Schedule, may be attached if more space is required)

INCLUDES ALL YOGA ACTIVITY

CERTIFICATE HOLDER

CANCELLATION

SHOULD ANY OF THE ABOVE DESCRIBED POLICIES BE CANCELLED BEFORE THE EXPIRATION DATE THEREOF, NOTICE WILL BE DELIVERED IN ACCORDANCE WITH THE POLICY PROVISIONS.

AUTHORIZED REPRESENTATIVE
MATT HOGAN Matt Hogan

© 1988-2015 ACORD CORPORATION. All rights reserved.

The ACORD name and logo are registered marks of ACORD

MISCELLANEOUS PAYMENT RECPT#: 1978149
City of Lafayette, IN
20 N 6th St
Lafayette IN 47901

DATE: 01/14/20 TIME: 14:51
CLERK: mmiller DEPT:
CUSTOMER#: 999
MISC CUSTOMER
COMMENT: YOGA ON THE BRIDGE

CHARGES:

APG1	APPLICATION FEE	25.00
BANF	BANNER INSTALLM	50.00
AMOUNT PAID:	75.00	

PAID BY: ANITA TRENT
PAYMENT METH: CREDIT CARD
REFERENCE: V#9481 EX 1021

AMT TENDERED: 75.00
AMT APPLIED: 75.00
CHANGE: .00

SPECIAL EVENT - PUBLIC PROPERTY USER APPLICATION & AGREEMENT

DO NOT USE FOR
* Contractor vehicle permit
OR
* Single Day Temporary Parking Restriction Request

DIRECTIONS

Step One:

- If this request involves closing a street
  Contact Lafayette Police – Special Operations Division / 765-807-1272
- If this request involves renting the Big Four Depot - Community Room, Riehle Plaza, or John T. Myers Pedestrian Bridge
  Contact Facilities Department for availability / 765-807-1323

Step Two:

- Complete and submit this application to Lafayette Clerk's Office
  City Hall, 2nd floor, 20 N 6th Street, Lafayette, IN / 765-807-1021

User Information

Date of Event: _____ Time: From: _____ am/pm to: _____ am/pm

Name: _____ Organization: _____

Street Address: _____

City: _____ State: _____ Zip Code: _____

Contact person(s): _____ Phone Number(s): _____

Email: _____

Event Description: _____

Caterer: _____ Caterer's Phone Number: _____

This event will utilize the following venues (check all that apply):

☐ Big 4 Depot - Community Room ☐ Riehle Plaza ☐ John T. Myers Bridge

☐ City Right-of-way ☐ City Street ☐ Sidewalk ☐ Other _____

This event will include the following elements (check all that apply):

Estimated Attendance: _____ ☐ Private Trash Hauler (must be removed by 8am following day)

☐ Street/Sidewalk/Right-of-way restriction or closure ☐ Food or Beverages

☐ Restroom Facilities (required for events 4+ hours) ☐ Tents/Canopies

☐ Alcohol (security is required) ☐ Security (required when serving alcohol)

Not sure if you need an A&E Permit? Go to:
http://www.in.gov/dhs/2795.htm

☐ Amusement & Entertainment Permit #_____

☐ Stage ☐ Fireworks ☐ Outdoor cooker/grill ☐ Other _____

Optional Equipment & Services:

☐ Traffic Control: barricades, ***No Parking*** signs, water barriers, ***Road Closed*** Signs $25

☐ City Equipment: Trash totes, picnic tables, other $25

Timetable *(Minimum # of days. Advanced planning is encouraged; sequence remains the same)*

0	7 days		14 days	21 days			42 days
	Pre-planning		Notices	Event Preparation			Event
Begin	1st week	2nd week	3rd week	4th week	5th week	6th week	
	First contact	Submit Application Pre-event Meeting	Contact Neighbors prior to Board of Works Hearing	Board of Works Public Hearing & Approval			Date of Event

Application submittal checklist

☐ Application

☐ Pre-event meeting (if required)

☐ Good Neighbor letter to neighboring properties (send out prior to Board of Works hearing)

☐ Letter of request to Board of Works (omit if only using Big Four Depot community room)

☐ Receipt – payment made to City of Lafayette

- Damage Deposit: $ _____ (required only when renting Depot)
- Permit Fee: $_____ (fee waived when renting Depot)
- Rental Fee: $ _____
- Equipment & Services: $ _____ (optional)

☐ Certificate of Insurance

☐ Amusement & Entertainment Permit # _____

Not sure if you need an A&E Permit? Want more information? Go to: http://www.in.gov/dhs/2795.htm and see definition of A&E Permit in **Rule and Regulations** instructions found at the same link as the **Special Event Application**

☐ Traffic Control / Public Safety / Emergency Plan

☐ User Agreement

☐ Board of Public Works and Safety meeting (if required)

USER AGREEMENT:

INDEMNIFICATION AND RELEASE. In consideration of being permitted the use of the venue(s) indicated above on this document (the "Property"), which Property is owned by the City of Lafayette, User as indicated below, for User and User's legal representatives, successors, and assigns, hereby releases waives and discharges the City of Lafayette, it officers, departments and employees and of them (herein collectively, "City") from all liability to User and User's officers, members, legal representatives, successors, invitees and assigns (herein collectively "User") from any and all loss or damage, and any claim of damages resulting therefore, on account of injury to persons or property arising out of possession or use of the Property, whether caused by the negligence of City, or any of them, or otherwise, resulting during the time the User is entitled to occupy and use the Property. User shall exercise the privileges under this Agreement at User's own risk, and irrespective of any negligence of City, User shall indemnify and hold City harmless from any and all liability for all damages, costs, losses and expenses resulting from, arising out of, or in any way connected with User's use and possession of the Property, including attorney fees incurred by City in defending any action arising out of User's possession or use of the Property, whether caused by negligence of the City, or any of them, or otherwise. City shall not be liable to User for any reason whatever User's occupation or use of the Property shall be hindered or disturbed. User agrees that User has made inspection of the Property and is not relying upon any representations of City or any of them as to the condition of state of repair of the Property or to its suitability for any particular purpose. This release, waiver, and indemnification is intended to be as broad and inclusive as permitted by the laws of the State of Indiana, and if any portion thereof is held invalid, the balance shall, notwithstanding, continue in full legal force and effect.

I have read the above Indemnification and Release and the Policy and Rules governing the use of any public property, city street, sidewalk or public property within the city's right-of-way, the James F. Riehle Plaza, Big Four Community Room, and John T. Myers Main Street Pedestrian Bridge. I agree on my own behalf, and on behalf of the group or organization I am authorized to represent, to such Indemnification and Release and to follow such Rules and Regulations which are incorporated and made a part of this user agreement.

"Lafayette Board of Works"

By: _____

"User"

By: _____
Signature

Printed: _____

Date: _____

SPECIAL EVENT PERMIT
RULES AND REGULATIONS

Scheduling of street closures and special events on public property is done on a first come, first served basis, with priority given to Government sponsored events. Public spaces cannot be restricted or closed for any event without prior review and/or approval by the Lafayette Police Department and Lafayette Board of Works and Public Safety.

- Any event involving a street closure request must first contact **Lafayette Police Department - Special Operations Division, 765-807-1272** before filing an application.
- Any event using the Big Four Depot – Community Room, Riehle Plaza, or John T. Myers Pedestrian Bridge must contact **Lafayette Facilities Department, 765-807-1323** to check availability.
- A User Application and Agreement form for scheduling special events is available from the Lafayette Police Department or Lafayette Clerk's office and online at http://www.lafayette.in.gov/ Submit complete applications to the Lafayette Clerk's Office.

The following rules and regulations herein apply to the use of the Big Four Depot – Community Room; Riehle Plaza; John T. Myers Pedestrian Bridge; Lafayette city streets, public rights-of-way and public properties and are intended for the safety of all persons.

Prior to consideration by the Board of Works, all requests are reviewed by the Lafayette Police - Special Operations Division and Lafayette Fire Department due to street closures and events involving traffic safety, fire safety. All other departments will review requests for other concerns. All Special Event requests should complete an application and submit it to the Lafayette Clerk's Office. Following an internal review the request will be heard by the Board of Works.

A signed Application and Agreement form for use of any Lafayette public properties implies that the applicant has read and agrees to abide by these rules and regulations and will be responsible for those attending the designated event. Please read the rules and regulations carefully.

SECTIONS:

01 Definitions
02 City or State Permit - Required
03 Eligibility/Criteria
04 Exempt Activities
05 Permit – Application
06 Permit - Review & Procedure - Big Four Depot/Riehle Plaza/Pedestrian Bridge
07 Permit - Review & Procedure - All Other Outdoor/Street Closure Events
08 Traffic Control/Public Safety/Emergency Plan
09 Permit – Denial
10 Permit - Approval – Issuance
11 Alcoholic Beverages
12 Restroom Facilities & Handwashing Stations
13 Parking
14 Insurance Requirements
15 Damage Deposit/City Services and Use Fees
16 Cleanup/Damage Charges
17 Security
18 Duties of Event Holder

01 DEFINITIONS:

AMUSEMENT AND ENTERTAINMENT PERMIT (A&E PERMIT):
Amusement & Entertainment permits are state required and issued by the Indiana Department of Homeland Security. Some of the most common kinds of places and events that require A&E permits are: concerts and other shows, amusement rides, movies, dances, and bowling. It is extremely important that the owner of the property or the operator of the event applies for the A&E permit well in advance of the planned event so that the necessary life safety inspections of the venue can be performed to protect public safety. For additional information go to this state website. http://www.in.gov/dhs/2795.htm (see **02 - CITY OR STATE PERMIT - REQUIRED** for information and requirements necessary when preparing a plan).

APPLICANT/EVENT HOLDER (APPLICANT): Any person or organization that seeks a special event permit from the City to conduct or sponsor an event governed by this section. An applicant must be twenty-one (21) year of age or older. When members of the group or organization making application are under 21 years of age, at least one adult supervisor for each 15 participants under 21 is required. Applicant is responsible for setting up and taking down any equipment or other items used to conduct the event.

SPECIAL EVENT: a temporary event or gathering, including but not limited to a parade, procession, street dance, rally, social gathering, wedding and wedding reception, race, concert, festival or cultural event, exhibition or show, celebration, carnival, and circus that involves one or more of the following activities:

1. Use of public property or facility;
2. Closing a public street;
3. Blocking or restricting access of public property;
4. Blocking or restricting access to private property of others;
5. Sale of merchandise, food, or beverages on public property;
6. Erection of a tent or shelter on public property (staked tents are not permitted in City right-of-way);
7. Temporary installation of a stage, band shell, truck, trailer, van, portable building, booth, grandstand, or blenchers on public property;
8. Placement of portable toilets on public property or placement of no-parking, directional, oversized or identification signs or banners in or over a public right of way.
9. Use of fireworks, outdoor cookers or grills;
10. An event requiring an amusement & entertainment permit.

TRAFFIC CONTROL/PUBLIC SAFETY/EMERGENCY PLAN: (here-after the Traffic/ Emergency Plan) a map to show sections of street/public right-of-way closed to vehicular and/or pedestrian traffic and/or location/type of traffic control used during a special event. Street closures may not interfere with necessary traffic circulation or police and fire emergency routes. ***Applicants of events may be required to hire off-duty City Police officers, off-duty Lafayette Firefighters, or provide a city approved security plan for traffic control/emergency routes and/or security during an event.*** Determination to require off-duty City Police or security is made at the discretion of the Lafayette Police Department. Additional provisions for emergency routes are made at the discretion of the Lafayette Fire Department. The Lafayette Board of Works and Public Safety must approve all security and emergency measures prior to granting

approval for the event and has the authority to request that additional measures be taken prior to approval of the permit. (See **08 - TRAFFIC CONTROL/PUBLIC SAFETY/EMERGENCY PLAN** for information and requirements necessary when preparing a plan).

02 CITY OR STATE PERMIT - REQUIRED:

1. **CITY PERMIT** - Any event that uses public property or causes any portion of a city street, sidewalk or public property within the city's right-of-way to be restricted or closed, requires a special event permit and proof of General Liability coverage; $1,000,000 for not-for-profits organizations and commercial groups or $300,000 for individuals (see **11 - ALCOHOLIC BEVERAGES** for additional insurance requirements when serving alcohol). Lafayette Board of Works approval is required for all special event permits.

2. **STATE PERMIT** - Amusement & Entertainment permits are state required and issued for events at a variety of locations and venues. Some of the most common kinds of places that require A&E permits are: concerts and other shows, amusement rides, movies, dances, and *bowling. It is extremely important to apply for the A&E permit well in advance of the* planned event so that the necessary life safety inspections of the venue can be performed to protect public safety. Go to this Indiana Department of Homeland Security website for additional information. http://www.in.gov/dhs/2795.htm

03 ELIGIBILITY/CRITERIA:

1. A public property or right-of-way may be used for recreational, social, educational, civic and other appropriate activities as determined on a case by case basis for non-commercial purposes with review and/or approval from Lafayette Police Department - Special Operations Division, Lafayette Fire Department, all other city departments and the Board of Works and Public Safety.
2. Streets may be temporarily closed if it does not interfere with necessary traffic circulation or police and fire emergency routes. **Street closure requests that block police or fire department emergency routes will be denied**.

04 EXEMPT ACTIVITIES:

A special event permit is not required for a wedding or funeral procession on the street or a temporary parking restriction request. If unsure, contact the Lafayette Police Department – Special Operations Division to confirm a permit is not needed.

05 PERMIT - APPLICATION:

A Special Event Permit Application is a required part of the permitting process. Copies are available from the City website at http://www.lafayette.in.gov. Permit fees can be paid to the City Clerk's Office.

City Contacts:

Lafayette Police Department
Special Operations Division
20 N. 6th Street, Lafayette, IN 47901
Ph: 765-807-1272 / Fax: 765-807-1281
Lafayette Police Department

Lafayette Facilities Department
2630 Elmwood, Lafayette, IN 47904
Ph: 765-807-1323
Facilities Department

Lafayette Fire Department
443 N. 4th Street, Lafayette, IN 47901
Ph: 765-807-1600 / Fax: 765-807-1601
Lafayette Fire Dept

Lafayette City Clerk's Office
20 N. 6th Street, Lafayette, IN 47901
Ph: 765-807-1021 / Fax: 765-807-1024
City-Clerk

Lafayette Parking Operations
20 N. 6th Street, Lafayette, IN 47901
Ph: 765-807-1130 / Fax: N/A
Parking-Operations

Lafayette City Engineer's Office
20 N. 6th Street, Lafayette, IN 47901
Ph: 765-807-1050
Engineering Department

06 PERMIT - REVIEW & PROCEDURE : BIG FOUR DEPOT/RIEHLE PLAZA/JOHN T. MYERS PEDESTRIAN BRIDGE:

Contact: See table in #5 for mailing address, phone /fax numbers and website address.

- Lafayette Police Department – Special Operations Division for street closures.
- Lafayette Facilities Department for Big Four Depot Community Room availability.

Discuss event needs: facilities, site, dates, security, street closures, etc. (see check list on User Application & Agreement form)

- Events using the Big Four Depot – Community Room must work with the Facilities Department, confirm availability and submit an application to the Clerk's Office. For rental information contact Facilities Department to discuss your event request 765-807-1323 Submit an application, proof of insurance and pay permit and rental fees to the Clerk's office no less than 45 days prior to the event for review.
  - **Access** – Facilities are available from 8:00 am to 10:00 pm
  - **Parking** – The parking lot north of the Depot is reserved for facility tenants and is not available for use. At the event, Users should provide adequate directions for attendees to parking. For more information below, see section **13 PARKING.**
  - **Rental Rates** – The Big Four Depot Community Room rental options

8:00 am–2:00 pm	$300.00
4:00 pm–10:00 pm	$400.00
8:00 am–10:00 pm	$450.00
Security Deposit *	$100.00
Early Access **	$50.00 per hour
Late Charges ***	$25.00 per 15 minutes

* **Security Deposit** – Security Deposits are refundable following inspection. Renter/Applicant is responsible for the removal of all trash and clean-up leaving the property/facility in the same or better condition as before the event. Applicant shall be responsible for trash removal. Failure to meet these requirements will result in a charge based on the current city man hours and equipment expense necessary to clean up after the event.

** **Early Access** – Renters may gain early access to facility before the start of their scheduled rental provided the facility is available for an additional charge.

*** **Late Charges** – Late charges will be charged to renters who go past the scheduled end of their rental. A charge of $25/for every 15 minutes past will be assessed.

- **Restrooms** – There are two restrooms in the community room available for use by those who rent the community room. Those renting only the Plaza and/or the Bridge must provide portable toilets. For more information below see section **12 RESTROOM FACILITIES & HANDWASHING STATIONS.**
- **Food and Clean-up** – Food may be brought into the Community Room for any event. Users may either bring in their own food or it may be catered. **The event organizer is responsible for the removal of all trash and clean-up of the facilities. If proper clean-up does not occur, the User will be responsible for paying any clean-up cost.** This includes any grease and stains on the brick paver or other surfaces. Do not pour grease into any drain. For more information below see section **15 CITY SERVICES AND USER FEES.**
- **Vehicles** – No motor vehicles are allowed on the bridge without prior approval of the Lafayette Board of Works and Safety.
- **Amenities** – The Community Room is equipped with many amenities including
  - 100 chairs
  - 10 – 60" round tables / 10 – 8' banquet tables
  - Kitchenette with sink, refrigerator and microwave oven
  - Handicapped accessible
- **Additional Information** – See sections below for
  11 ALCOHOLIC BEVERAGES,
  14 INSURANCE REQUIREMENTS,
  17 SECURITY and
  18 DUTIES OF EVENT HOLDER.

07 PERMIT - REVIEW & PROCEDURE :
ALL OTHER OUTDOOR /STREET CLOSURES AND SPECIAL EVENTS:

Contact: See table in #5 for mailing address, phone /fax numbers and website address.

- Lafayette Police Department – Special Operations Division for street closures. Discuss event needs: facilities, site, dates, security, street closures, etc. (see check list on application)
- Events requiring street closure must contact Lafayette Police – Special Operations Division and Lafayette Fire Department
- Events affecting a state road must also contact INDOT- Crawfordsville District

a) **Street closures:** Contact Lafayette Police Department – Special Operations Division and discuss your event request 765-807-1272. Schedule a pre-event meeting with staff through the police department at least one week prior to submitting a Special Event Permit application. Submit an application, Traffic/Emergency Plan (show type of traffic control expected for the event, see **08 – TRAFFIC CONTROL/PUBLIC SAFETY/ EMERGENCY PLAN** for additional information), Board of Works letter, and Good Neighbor notification letter, proof of insurance and paid receipt for the permit fee to the City Clerk's Office no less than 45 days prior to the event for review.

b) **State Road restrictions** (US52/Teal Road): Contact the Indiana Department of Transportation, Crawfordsville District Office – Permits Depart 765-362-3700

1. Contact all residential and commercial businesses properties affected with written notification of the event prior to the Board of Works hearing and no less than 30 days before the special event or street closure (see Board of Works proceedings in packet).

   Good Neighbor Notification: Applicant is required to provide written notice to all residential, nonprofit and commercial properties, specified organization and agencies affected by the event or closures including all businesses and homes within a one (1) block radius. Notice to the public must be provided prior to the Board of Works hearing and no less than thirty (30) days in advance of the event. The notice must state the name of the applicant, the streets or public property or right-of-way affected by the event, date(s) of the event, state the time street or other closures or restrictions will occur, the schedule of activities (entertainment, outdoor sales, food etc.), a contact person and phone number, City Clerk's Office contact number and approximately when the applicant expects the request to go before the Board of Works for approval. Provide Lafayette Police Department – Special Operations Division with a copy of the written notification when submitting the permit application. Questions or concerns from residents, business or property owners can be submitted to Applicant or City Clerk's Office either prior to or at the Board of Works hearing and will be addressed by Applicant when the request comes before the Board of Works, before approval of the request is granted.

2. During the pre-event meeting with the Lafayette Police Department – Special Operations Division and Lafayette Fire Department; applicant will be instructed to supply both departments with a copy of the Traffic/Emergency Plan. In addition, applicant may be instructed to contact one or more of the following departments or agencies if they are affected by the request;
   - Lafayette Engineering Department: 765-807-1050
   - Lafayette School Corporation Transportation Department: 765-771-6059
   - City Bus – Public Transportation Provider: 765-423-2666
   - Tippecanoe County Sheriff's Department: 765-423-9321
   - Tippecanoe School Corporation Transportation: 765-474-2481

3. Submit a letter directed to the Board of Works requesting the special event and/or street closure. The letter should include who, what, when, where and why the request is being made or street closure is needed. Applicant or representative is encouraged to be present and available at the Board of Works meeting to answer questions from Board members. Failure to appear could result in denial of the request, tabling of the permit application or other such action that the Board deems appropriate under the circumstances.

08 TRAFFIC CONTROL/PUBLIC SAFETY/EMERGENCY PLAN:

All special event applications that include a request to close a public street, block or restrict public property or block or restrict access to private property of others must provide a map to the Lafayette Police Department – Special Operations Division and Lafayette Fire Department to show:

- Sections of street/public right-of-way closed to vehicular and/or pedestrian traffic
- Location/type of traffic control used during a special event.
- Additional information as instructed by the police or fire department staff during the pre-event meeting.

Street closures may not interfere with necessary traffic circulation or police and fire emergency routes. The Lafayette Board of Works and Public Safety must approve all security and emergency measures prior to granting approval for the event and has the authority to request that additional measures be taken prior to approval of the permit. ***Applicants of events may be required to hire off-duty City Police officers, off-duty Lafayette Firefighters or provide a city approved security plan for traffic control/emergency routes and/or security during an event.*** Determination to require off-duty City Police or security is made at the discretion of the Lafayette Police and Fire Departments. Additional provisions for emergency routes are made at the discretion of the Lafayette Fire Department. ***Events where alcohol is served are required to have police officers based on attendance.*** (See **17 –SECURITY** for additional information).

09 PERMIT - DENIAL:

An application request may be denied at the discretion of the Police Department or the Board of Works and Public Safety. **Failure of an applicant to submit complete paper work or to appear at the scheduled Board of Works meeting could also result in denial of a request, tabling of the permit application or other such action that the Board deems appropriate under the circumstances.** Requests for street closures that block emergency routes will be denied.

10 PERMIT - APPROVAL - ISSUANCE:

Upon Lafayette Board of Works approval, an email from the Clerk's Office is sent to the applicant along with a copy of the signed application confirming approval of the request.

11 ALCOHOLIC BEVERAGES:

Alcohol is permitted at Special Events on city streets, rights-of-way and public property as per regulations of the Indiana Alcohol and Tobacco Commission (ATC). Any event where spirits, beer and wine are served must hire an alcohol beverage caterer holding a 3-way license. Any event where beer and wine is served must either hire an alcohol beverage caterer or obtain a one day permit and use individuals who also hold valid permits. It is the sole responsibility of the organizer to provide the city with proof that all the above requirements and permits issued through the Indiana Alcohol and Tobacco Commission (ATC) have been secured (see www.in.gov/atc/).

12 RESTROOM FACILITIES & HANDWASHING STATIONS:

Events anticipated lasting more than four (4) hours must provide portable toilets based on the following circumstances:

- 1 portable toilet for each 250 attendees
- Any event must have 1 handicap accessible portable toilet or a minimum of one for every ten standard toilets.

Events that include food require vendors to meet the County Health Department standards and must provide hand washing stations for their workers based on those standards. It is the sole responsibility of the applicant or food vendors to comply. Organizers of events that include food and require portable toilets must provide hand washing stations for the public based on the following circumstances:

- 1 hand washing station per 6 portable toilets

13 PARKING:

The City's Columbia Parking Garage is located at 18 N 5th Street and is available for public parking during an event. Parking is free on nights and weekends. The Depot lot on 2nd Street may have restrictions for parking during certain events. Please follow signage and traffic control devices if present. All other parking structures and surface lots in the downtown area are otherwise restricted and/or privately owned. Different rules and parking fees may apply. Applicants should work with the City's parking operations staff. Additional parking information is also available by contacting the **City Parking Operations at 765-807-1130**.

14 INSURANCE REQUIREMENTS:

General Liability coverage in the amount of $1,000,000 for not-for-profit organizations and commercial groups or $300,000 for individuals is required with a Special Events permit application. A Certificate of Insurance must be part of the application request to show proof of coverage for the date of the event. The City of Lafayette, IN must be named as a Certificate Holder. A Special Event Permit will not be issued without the Certificate of Insurance. Applications that include the sale of alcohol must have separate Liquor Liability Insurance and obtain necessary permits and approval through the Indiana Alcohol and Tobacco Commission (ATC) (see www.in.gov/atc/). The caterer must provide a copy of its liquor license, proof of Liquor Liability Insurance and Certificate of Insurance with the event permit application. The proof of Liquor Liability and Certificate of Insurance shall name the City of Lafayette as an additional insured.

15 DAMAGE DEPOSIT/CITY SERVICES AND USE FEES:

Damage Deposit (required with Depot rental)	$100 (refundable following inspection)
Big Four Depot Rental	Varies, see – **06 BIG FOUR DEPOT**
Special Event/Street Closure permit fee	$25 (fee waived when renting Depot)
Traffic Control Fee (if needed for larger events)	$25

16 CLEANUP/DAMAGE CHARGES:

Applicant is responsible for the removal of all trash and clean-up leaving the public property, facility or right-of-way and street in the same condition as before the event. When events include food vendors, it is the vendor's responsibility as well as the applicant to remove all packaging and food waste. Filling public trash receptacles in the vicinity of the event is not permitted. Applicant shall be responsible to supervise proper trash removal. All trash receptacles, toters, and/or dumpsters are to be removed from the event location by 8:00am the next day following the event. Failure to meet this requirement will result in a charge to the applicant based on current city man hours and equipment expense necessary to clean up after the event.

Charges for City clean-up of a special event is based on actual man hours, material and equipment costs as follows:

(Average cost per hour)

Labor	$25.00	Dump Trucks	$95.00
Pickup Trucks	$40.00	Street Sweepers	$160.00
Garbage Packers	$155.00	Trailers	$25.00
Back Hoe/Tractor	$85.00	Mowers	$35.00

17 SECURITY

Applicants of an alcohol-free event may be required to hire off-duty City Police officers, off-duty Lafayette Firefighters or provide a city approved plan for security during an event. Determination to require off-duty City Police, Firefighters or security is made at the discretion of the Lafayette Police Department on a case by case basis. The Lafayette Board of Works and Public Safety must approve all security and measures prior to granting approval for the event and has the authority to request that additional measures be taken prior to approval of the permit.

Events where alcohol is served are required to have police officers based on attendance as follows:

Attendees	# of Police Officers
0-50	none (unless required to by Lafayette Board of Works or Police Dept)
51-200	two police officers
201-300	three police officers
301+	Lafayette Police Department will recommend the required number of police officers

18 DUTIES OF APPLICANT/EVENT HOLDER :

Board of Works & Public Safety (BOW) hearing. Applicant is strongly encouraged to attend the BOW meeting when the permit request is heard. Procedure is as follows:

- Submit your **Special Event** application and all completed paperwork to the appropriate office. Allow three (3) weeks for city review. Once review is complete, the request will be placed on the board's agenda for the following Tuesday. **Incomplete applications will not be accepted and request will not be placed on the board's agenda until paperwork is complete and reviewed.**
- On Tuesday of BOW hearing, applicant or representative is encouraged to attend the Caucus meeting at 8:30 AM held in the BOW room, 2nd floor across from the Clerk's Office, City Hall;
- After Caucus everyone will move to the Council Chambers located on the first floor of City Hall for the official BOW meeting which starts at 9 AM;
- If present, when your Special Event request is announced, walk to the podium, identify yourself, and state your name, address and organization you represent. Present your request for the event and/or closure to the board and publicly answer any questions.

Volunteer provisions. Applicant is required to supply its participants with provisions such as water, medical assistance, etc., and must be readily accessible during event at all times.

Food or Beverages. If food or beverages are served to the public, it shall be the responsibility of the applicant and/or food vendors to contact the Health Department and obtain required permits and/or arrange for food handling training.

Alcoholic Beverages. To serve or sell alcoholic beverages it is the responsibility of the applicant to hire an alcohol beverage caterer or obtain the proper permits, licenses and training from the Indiana Alcoholic and Tobacco Commission (ATC) subject to Board of Works approval. If alcohol is to be sold, Liquor Liability Insurance is also required.

Public safety and security. It is the responsibility of the applicant to provide EMS, Public Safety Plan, and a site plan which includes the event layout, structures, stages, tents, cooking arrangements etc. and other procedures as required by the Lafayette Police and Fire Departments.

Emergency evacuation plans. Applicant shall provide a traffic control and emergency plan as required by the Lafayette Police and Fire Departments. Applicant is required to schedule and attend a pre-event meeting including both departments before approval of the event is granted.

Safety briefing. When off-duty City Police or security are required at an event; applicant and applicant's key staff are required to attend a briefing with security personnel on the day of the event prior to it starting.

Traffic Control Signage and Barricades. These may be provided by the City through the Engineer's Office 765-807-1050 and/or Traffic Improvement Department 765-807-1400. Additional signage can be purchased or leased through any local sign company.