LAFAYETTE HISTORIC PRESERVATION COMMISSION
Lafayette City Hall
2nd Floor-Board of Works Room

Call To Order

Approval Of Minutes

Approval Of December 16, 2019 Minutes

Documents:

12-16-2019 HPC MINUTES.PDF

New Business

Historic Preservation Commission Committee Assignments

Public Relations & Education Committee Report

District Committee Report

COA Committee Report

COA Applications

COA- 521 Main Street

Documents:

521 MAIN ST COA APPLICATION.PDF

COA- 315 Columbia Street

Documents:

COA_315 COLUMBIA STREET.PDF

Staff Report

Public Comments

Adjournment

Historic Preservation Commission Meeting Minutes
December 16, 2019 7:00 p.m.
Lafayette City Hall – Board of Works Room

Commission Members in Attendance: Julie Ginn, Kevin Klinker, Sean Lutes, Shawna McCully, Amy Paget, Glen Vick and Kurt Wahl
Absent: John Burns, Patti Morgan

Staff in Attendance: John Collier, Dann Keiser, Michelle Conwell

Guests: Taletha Coles, 517 N. 10th Street; Lucy Coles, 517 N. 10th Street; Nekha Snyder, 517 N. 10th Street; Nic Brown, 17 Wildwood Drive; Dianne Mork, 1509 & 1521 Cason Street

Noting a quorum, Vice President Sean Lutes called the meeting of the Lafayette Historic Preservation Commission to order at 7:00 pm.

Approval of the August Minutes

Amy Paget moved to recommend approval of the of the November 18, 2019 meeting minutes. Glen Vick seconded the motion. The motion passed unanimously.

New Business

Election of Historic Preservation Commission Officers for 2020
Kevin Klinker moved to open the nominations of Officers for the 2020 Historic Preservation Commission Shawna McCully seconded. The motion passed unanimously.

The slate of Officers presented is as follows:
John Burns-President
Sean Lutes-Vice President
Glen Vick-Secretary

Kevin Klinker moved to close the nominations of Officers for the 2020 Historic Preservation. Julie Ginn seconded. The motion passed unanimously.

Kevin Klinker moved to accept the slate of Officers as listed above. Julie Ginn seconded. The motion passed unanimously.

Approval of the 2020 Calendar of Historic Preservation Commission Meetings-Kevin Klinker moved to approve the 2020 Calendar of Historic Preservation Commission meetings. Shawna McCully seconded. The motion passed unanimously.

Public Relations and Education Committee report
No report was made by the Public Relations and Education Committee.

District Committee report
District Committee Chair, Shawna McCully stated that the Commission received, reviewed and recommend approval of petitions for the establishment of two new local historic districts in the City. Petitions include the following:

Petition to Establish the Local Greenbush Historic District
This petition includes only the Greenbush Cemetery at this time. Taletha Coles, Fairfield Township Trustee and petitioner, spoke about her excitement in being involved with the Historic Preservation Commission. She gave details about the changes she has in mind for the cemetery. John Collier and members of the Commission briefly went over the requirements for submitting a COA for her future reference. Mr. Collier also explained the approval process for the establishment of a new local district. Once this Commission recommends approval of the new district, then an Ordinance will be written and forwarded to the City Council for its approval following two readings. The first reading of the Ordinance will be heard at the January City Council meeting with the final reading at the February City Council meeting. Once the City Council approves the new district, it will be recorded with the County Recorder's office. Kevin Klinker moved to approve the Petition to Establish the Local Greenbush Historic District. Shawna McCully seconded. The motion passed unanimously.

Petition to Establish the Local Perrin / Cason Street Historic District
This petition is to include 1509 and 1521 Cason Street. Dianne Mork, owner of the properties and petitioner, spoke about the history of the homes originally built by James Perrin for two sons, William (1509 Cason St.) and John (1521 Cason St.). Mr. Collier reiterated the process for final approval of the local district through an Ordinance to be passed by City Council and Mrs. Mork stated that she understood. Julie Ginn moved to approve the Petition to Establish the Local Perrin / Cason Street Historic District. Kevin Klinker seconded. The motion passed unanimously.

COA Committee report

COA applications:

COA-6 S. 9th Street
The first COA is for exterior lights at 6 S. 9th Street. This is the former Village Pantry site at the South West corner of 9th and South Streets that is under construction right now to install a pump house, underground sewer infrastructure and small park with sidewalk, seat wall and landscaping. The Commission approved the park and pump house project in May 2019, but this is for exterior lights which were not shown on the original COA. The proposal is for 2 building lights over the doors of the pump house (on the south and west faces of the pump house) and at most four ornamental lights along the back of the curved seat wall and new sidewalk. The new lights are similar to and compatible with the existing street lights that go up the hill on South Street between 9th Street and Main Street; black ornamental poles with acorn style fixtures on top. These lights will be pedestrian scale so likely not as tall as the lights along South Street. We're still working with the consultants on the exact number of new poles/lights to be installed. Kevin Klinker moved to approve the 6 S. 9th Street COA. Shawna McCully seconded. The motion passed unanimously.

COA-North West corner of 10th and Main Streets
The second COA is for artistic interactive seating at the proposed bump out at the North West corner of 10th and Main Street as part of the Main Street Streetscape Phase 3 project. You may recall that the Phase 3 project was approved by the Commission a couple of months ago, but this is a new site amenity that is being added to the project for this specific location. This new site amenity is a unique, artistic and interactive approach to seating for this one location. It involves the installation of a cluster of 5 metal cylinders at various diameters and heights (widest is 30" diam. tallest is 36" tall) that have different colored acrylic tops through

which LED light is emitted that creates a seat top that gives off a subtle, glowing colored light. The cylinders have internal light and sound mechanisms. When the acrylic top is touched a subtle sound is made and the acrylic top is illuminated. Mr. Collier confirmed with the design consultants for the Phase 3 streetscape project that the sounds are programmed with an mp3 file so they can be programmed with just about any pleasant, subtle sound and the sounds can be changed. The volume level can be controlled and set to a timer so it won't make a sound after a certain hour. The LED lights can also be set on a timer, most likely sound and lights would be coordinated to go on and off together. The exterior of the metal cylinder that houses the sound and light components can be powder coated to just about any color, the City staff is recommending black. Each cylinder will be mounted to its own concrete base within the brick paver area. Overall, the lighting effect will be low intensity and subtle. Mr. Collier shared an image of an installation in another city to show the light emitted from the top of the cylinder. The closest cylinder is approximately 8-9 feet from the building, so they won't be shining directly onto the building. The proposed site of the cylinders is on the proposed bump out adjacent to 926-928 Main Street, which is the same building where the replacement limestone band adjacent to the building was previously approved by the Historic Preservation Commission. There was considerable discussion among the members of the Commission and concerns were raised by a couple of Commissioners who would have preferred a more creative and thoughtful solution. Kurt Wahl moved to approve the COA for the installation of interactive seating for the North West corner of 10th and Main Streets. Julie Ginn seconded. The motion passed with a vote of 5-2 with dissensions from Kevin Klinker and Amy Paget.

Staff Report - None

Public Comment

Vice President Lutes asked for additional comments from the public. There were no comments from the public.

Adjournment

There being no further business to bring before the Commission, Julie Ginn moved to adjourn the meeting. Kevin Klinker seconded the motion. The motion passed unanimously and the meeting of the Historic Preservation Commission was adjourned at 7:32 pm.

Respectfully submitted,
Michelle Conwell, Recording Secretary

Approved: _____
Glen Vick, Secretary
Historic Preservation Commission

LAFAYETTE HISTORIC PRESERVATION COMMISSION

515 Columbia Street Lafayette, IN 47901 765-807-1090

APPLICATION FOR CERTIFICATE OF APPROPRIATENESS (COA)

OFFICE USE ONLY********DO NOT COMPLETE ANY ENTRIES CONTAINED IN THIS BOX********OFFICE USE ONLY

Date Received:_____ Date Approved COA Expires:_____

LOCAL HISTORIC DISTRICT OF PROJECT_____

___Approved, ___Approved with Amendments, ___Denied, ___Tabled, ___Withdrawn by Owner

Approved By:_____Date:_____

ADDRESS OF PROJECT: 521 MAIN ST.

Brief description of proposed work: (Please PRINT CLEARLY or TYPE)

If necessary for description please attach additional sheet. REMOVE SHEET METAL, RESTORE EXISTING VERTICAL FEATURES, PROVIDE NEW STOREFRONT DOORS, WINDOWS, TRANSOM, SIGN BOARD AND CORNICE.

What are the approximate start and finish dates of the proposed work?

Start FEB 2020 Completion APR. 2020

Present use of property: VACANT

Proposed use of property: WEST SUITE OFFICE, OTHER SPACES STILL VACANT

APPLICANT (Please PRINT CLEARLY or TYPE)

Name: G. KURT WAHL, WAHL ARCHITECTURE
Mailing Address: 1815 UNDERWOOD ST., LAFAYETTE, IN 47904
Phone: 765-429-5880
E-Mail KURT @ WAHLARCH.COM

APPLICANT relationship to Owner ___Contractor, X Architect, ___Realtor, ___Agent, ___Other

PROPERTY OWNER (Please PRINT CLEARLY or TYPE)

Name: ROBERT HOCKEMA
Mailing Address: P.O. Box 1458 Lafayette, IN 47902
Phone: 765-479-1255
E-Mail: roberthockema@yahoo.com

CONTRACTOR (Please PRINT CLEARLY or TYPE)

Name: INTEGRATE BUILD
Mailing Address: 2800 FERRY ST., LAFAYETTE, IN 47905, SUITE B
Phone: 765 426 1743
E-Mail: TGALL @ INTEGRATEBUILD.COM

CONTACT PERSON: G. KURT WAHL Phone: 765-429-5880

E-Mail: KURT @ WAHLARCH.COM

ESTIMATED COST OF PROJECT: $ 25,000

The Lafayette Historic Preservation Commission is a nine-member board who meets monthly to review the COA applications that are subject to commission review.
The Lafayette Historic Preservation Commission cannot render judgment nor process an Application without the specific documentation listed below. It is the Applicant/Owner who must provide comprehensive documentation of the proposed project with adequate information so that there is a complete understanding of the project for the commissioners and staff when rendering a decision. Applications will NOT be processed without all required or requested documentation. An incomplete COA application may delay the COA review process.

These items must have been completed before submitting application: (Please check yes or no below)

1. **Are all zoning approvals met and in compliance for the proposed work? Yes_X_ No___**
2. **Are there any Variances pending or necessary for the proposed work? Yes___ No_X_**

Documentation to be submitted with application: (Minimum requirements for all COA Applications)

(Please place a check-mark at each listed item below that you include with this application)

_X_ Photos of building exterior (all visible elevations) maximum of 4 photos to a 8 ½"x11" sheet
_X_ Complete drawings of proposed project
_X_ Floor plans of affected levels
_X_ Exterior elevations of all areas where work will occur (minimum 11"x17" sheet)
_X_ Signed application
___ Site plan (If project affects ground floor exterior)
_X_ Sample or brochure plus specifications and color samples of all permanent materials to be used
_X_ Written description of proposed project and 1 set of full-sized plans
_X_ Photos of adjacent or attached structures showing locations of connection
_X_ Electronic versions of complete drawings of the proposed project are acceptable

NOTE: See categories below for specific projects and additional documentation as applicable.

WINDOW PROJECTS (Additional Documentation)

(Check-mark all that apply)

___ Elevation drawings of each window type
___ Window section drawing(s): with head, sill, jamb, mullion, and muntins with all dimensions
___ Condition statement of existing windows describing the type and extent of deterioration for windows to be removed or replaced. If replacement windows are proposed, submit photos showing condition and extent of deterioration.
___ Note indicating whether or not windows are original
___ Note on plan and elevations which windows are new and which are original to remain
___ Note materials to fill in opening and indicate structure to be removed if applicable

DOOR(S) PROJECTS (Additional Documentation)

(Check-mark all that apply)

___ Close –up photo(s) of the existing door(s) to be replaced and photos of doors on adjacent buildings
___ Condition statement of the existing doors describing the type and extent of deterioration
___ Door elevation drawing(s) of each door type
___ Door section(s)
___ Note on plan and elevations which doors are new and which are original to remain

SIGNAGE (Additional Documentation)

(Check-mark all that apply)

____Color photo(s) of the entire building with proposed location of the signage indicated.

____Close-up photo of the proposed signage location

____Detailed drawings showing the dimensions of the sign and how it will be attached to the building

____Description of the proposed sign and bracket materials, dimensions, sign lettering, signage lighting, and method of attachment to the building. We recommend you use existing holes where possible. If new anchorage holes are necessary, place anchorage in existing mortar joints and avoid damaging existing bricks and permanent exposed building materials.

Please note: Signage area and permits must be approved by the City of Lafayette Engineering Department.

STOREFRONTS/FACADES, AWNINGS, SHUTTERS, AND OTHER ARCHITECTURAL ELEMENTS (Additional Documentation)

(Check-mark all that apply)

_X_Clear description, photos and elevation drawings of proposed signage, lighting, awnings, security systems, and accessibility provisions (i.e. lifts, ramps, handrails etc.).

_X_Color photos/elevations showing storefront/ façade of all floors as they relate to all proposed work.

_X_ Drawings specifying the plan, section, and construction details.

NEW CONSTRUCTION, ADDITIONS, GARAGES, AND CARRIAGE HOUSES (Additional Documentation)

(Check-mark all that apply)

____Same requirements as listed on page 2 under **Documentation to be submitted with application**

STOOPS, STEPS, FENCES, HANDRAILS, PORCHES, AND BALCONIES (Additional Documentation)

(Check-mark all that apply)

____Color photos and construction plans detailing the location of the proposed stoops, steps, fences, handrails, porches, and balconies.

____Drawings specifying the proposed work, construction details, and installation method for all improvements under this section.

____Drawings of existing conditions without the proposed work

ROOFS (Additional Documentation)

(Check-mark all that apply)

____Color photos detailing the location of the roof(s)

____Drawings specifying the plans, construction details, and installation methods.

STREETSCAPING (Additional Documentation)

(Check-mark all that apply)

____Drawings and specifications of proposed site plan, including trees, plantings, grates, sidewalk amenities, signage, art work, sculptures, fountains, benches, tables, seating, etc.

____Drawings of the existing conditions without the proposed work

Please note: If the COA is approved, any changes or amendments to the approved COA will require additional review by city staff or the Historic Preservation Commission. An approved COA is valid for 12 months from the date of approval of the COA. After 12 months COA application must be resubmitted and reapproved by the HPC or Staff to continue the project.

REQUIRED SIGNATURE: The undersigned certifies that the statements set forth in this application including all drawings and specifications submitted herewith are true and correct, and agrees that the proposed improvements described in this application will be constructed in all respects in accordance with the approved COA as specified in the application, drawings and specifications submitted herewith. The undersigned further agrees to abide by any amendments approved to be part of this project by the Lafayette Historic Preservation Commission or Staff.

Applicant: (Print clearly or type) G. KURT WAHL

Signature of Applicant: G. Kurt Wahl Date: 1-13-20

Owner Print clearly or type) ROBERT HOCKEMA

Signature of Owner (if different): [illegible] Date: 1-13-20

APPLICATIONS AND DOCUMENTATION:

Applicant must provide 13 copies of the completed and signed COA Application and all documentation noted to be submitted with COA Application including: Materials to be used, detailed written description of the project with dimensions, drawings to scale, construction methods, finishes, manufacturing brochures and specifications as well as clearly labeled photographs of the building and affected areas. Plus any additional documentation as requested by Staff or the COA Committee. Electronic versions may be submitted if available in addition to the 13 copies noted above. The copies will be supplied to each Commissioner and the City Staff for the Lafayette Historic Preservation meeting.

The Commission follows the Secretary of Interior's Standards for Rehabilitation and Guidelines for Rehabilitation Historic Buildings when reviewing applications. Applications should follow these standards and guidelines when applicable. Additional guidelines, Preservation Briefs, Bulletins and "The Resource Guide", can be accessed on line at www. Lafayette.in.gov

Certain work in a Historic District may be approved by the Staff in lieu of being reviewed by the Lafayette Historic Preservation Commission, but the applicant will still be required to submit this application for Staff review with all documentation as noted for the proposed project.

Staff is authorized to approve the following: Signs that comply with the guidelines, Installation of storm windows, Installation of re-skinning of canvas awnings and canopies of a simple design, Installation of historically appropriate hand rails, Temporary removal of historic building components for the purpose of repair, Replacement of roof sheathing when there are no structural changes, Removal of chimneys that are only visible from the rear of a structure, Installation of stained or leaded glass windows, Installation of appropriate historical shutters, Removal of a non-original addition or alteration to a structure, and Extension of an approved COA for up to one additional year if the project scope has not changed. If questionable, please contact Staff to determine whether your project must be reviewed by the Lafayette Historic Preservation Commission.

APPLICATION SUBMITTAL DEADLINE:
This COA Application Form and all supporting documentation **MUST** arrive by 12:00 noon on the deadline date established to be considered at the next Historic Preservation Commission Meeting. Any information not provided to staff in advance of the meeting may not be considered by the Commission during their deliberation. Please call if you have any questions and Staff will assist you.

MEETING ATTENDANCE:
For COA applications requiring review by the Lafayette Historic Preservation Commission attendance at the Commission Meeting is strongly recommended to present the project and answer questions. The Commission will also hear public comments prior to making a decision on the project. Failure by the Owner, applicant or contractor to attend such meetings may result in denial of the Application due to insufficient presentation.

INSPECTIONS:
All projects will be inspected while work is in progress and upon completion of the project to ensure compliance with the approved COA.
Owner acknowledges that while the Lafayette Historic Preservation Commission only considers Certificates of Appropriateness for exterior features, under certain circumstances it may be necessary for the Commission Staff to have access to the interior of the building in order to accurately assess the condition of the exterior feature(s). The lack of access to the interior may prevent the Commission Staff from making a favorable recommendation.
Applicant **MUST** notify the Commission Staff upon completion of the approved COA work for a final inspection of the improvements.

WORKING WITHOUT A COA / DENIAL OF A COA
Lafayette Staff inspectors regularly inspect historic properties to ensure compliance with approved Certificates of Appropriateness. When additional work has been commenced without an approved COA, a Staff inspector may issue a stop work order and request that the Owner seek an addendum to the original COA to include any additional work, revisions or changes. Work undertaken without a Certificate of Appropriateness is in violation of Title 12 of the Lafayette City Code, and the Lafayette Historic Preservation Commission may require that unauthorized changes in a historic structure be reversed and or completed in a satisfactory manner. If the work continues, a building official may issue a citation with a fine and the Historic Preservation Commission may institute suit for injunction to restrain the Owner from further violation and to cause the violation to be prevented, abated or removed. Please contact the Staff if there is any question about changing the scope of the work approved.

*Include here submittal deadline and HPC meeting dates. (Change page numbers as required for pages added if necessary)

521 MAIN STREET

EXISTING FRONT ELEVATION

SCALE: $\frac{3}{16}$" = 1'-0"

PROPOSED FRONT ELEVATION

SCALE: 3/16" = 1'-0"

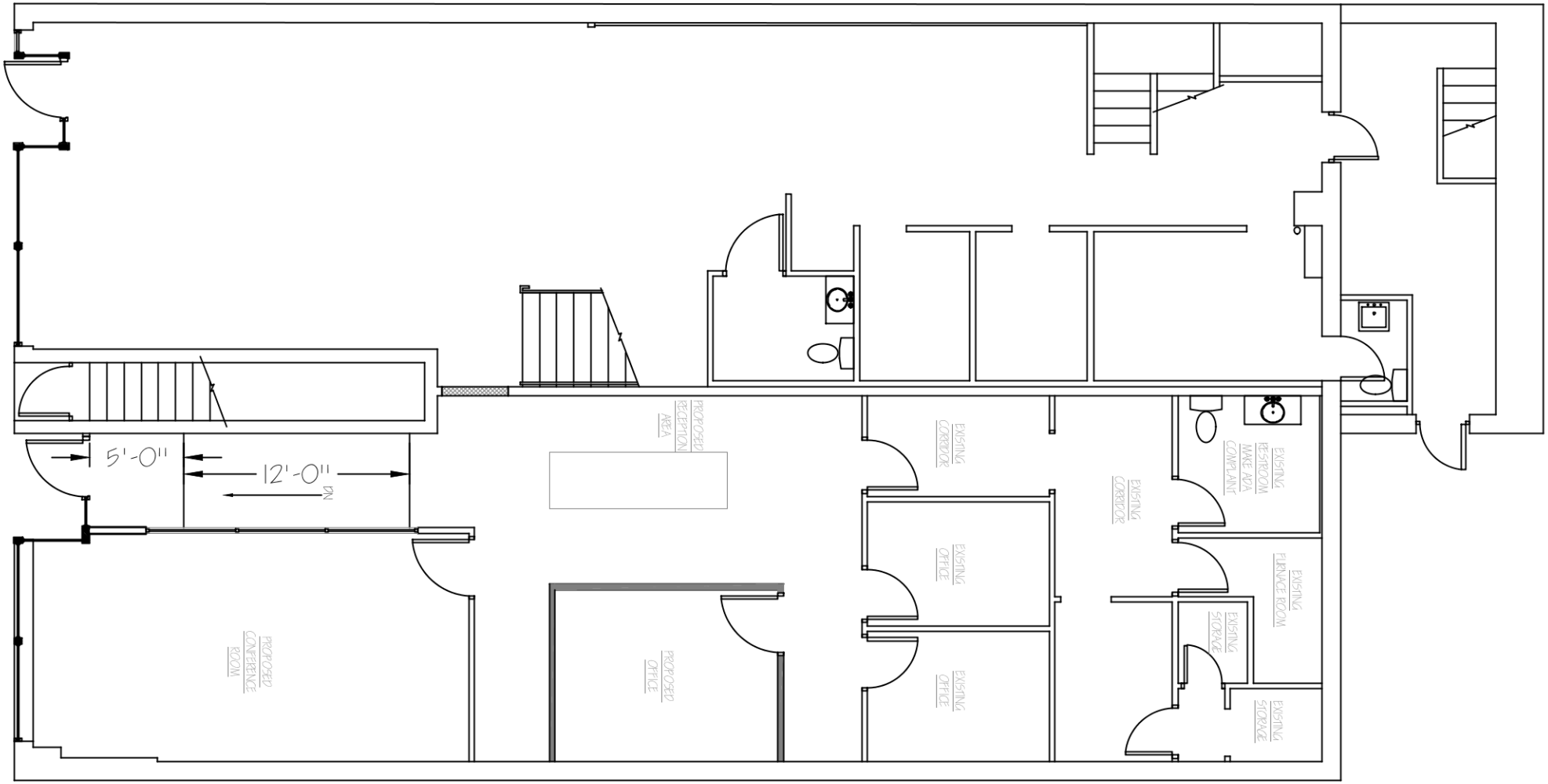

FLOOR PLAN

SCALE: $\frac{1}{8}$" = 1'-0"

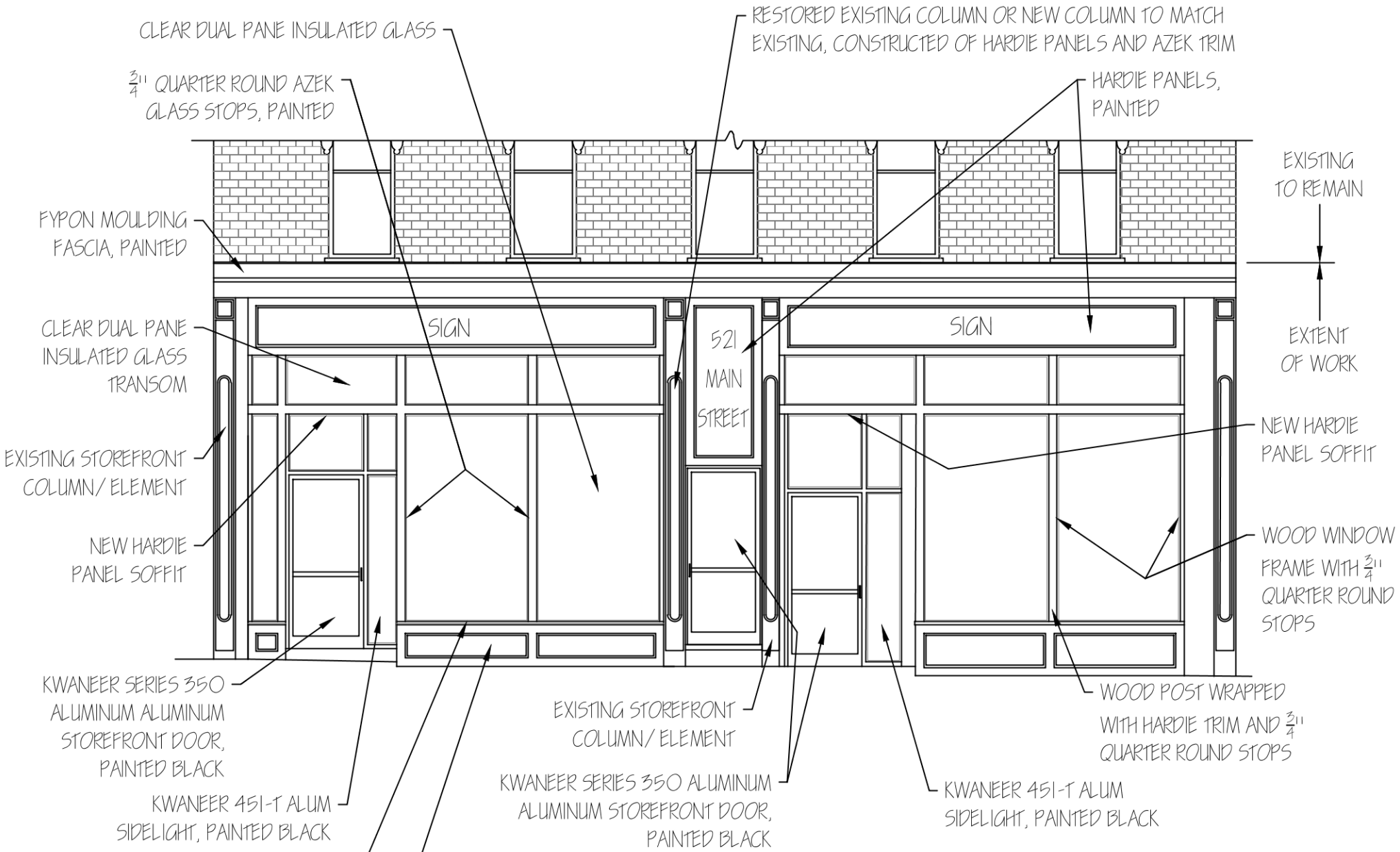

MATERIAL DESCRIPTION ELEVATION

SCALE: 3/16" = 1'-0"

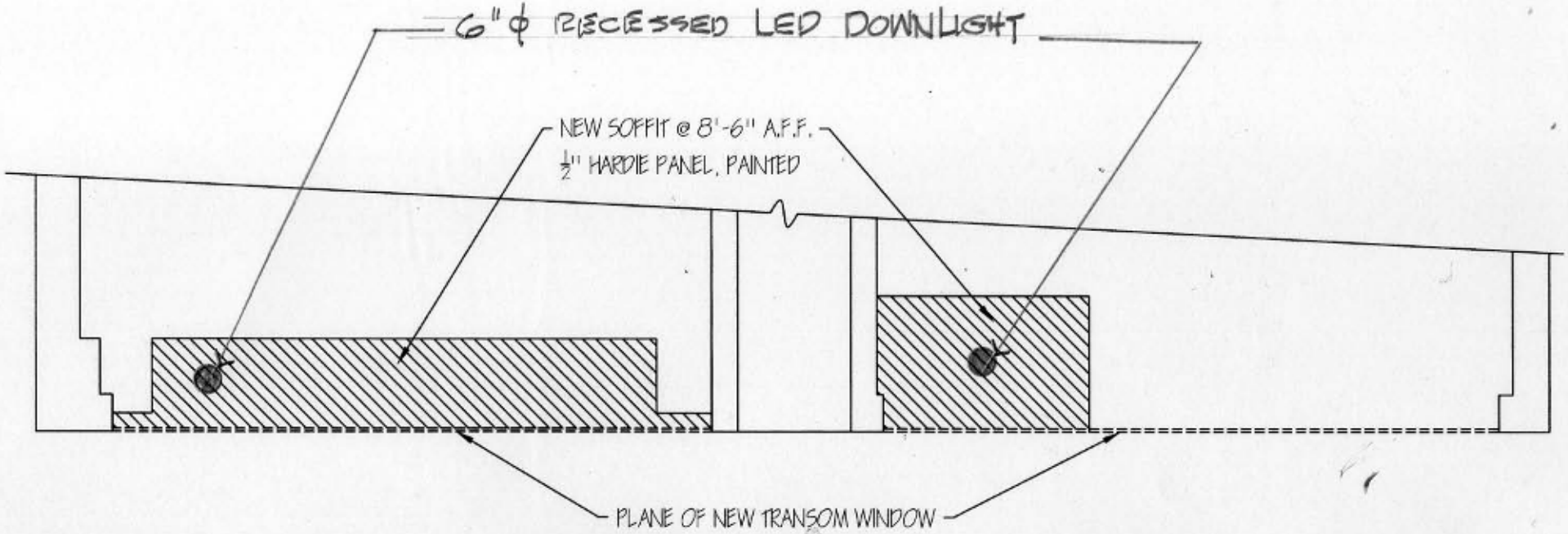

SOFFIT PLAN

SCALE: ¼" = 1'-0"

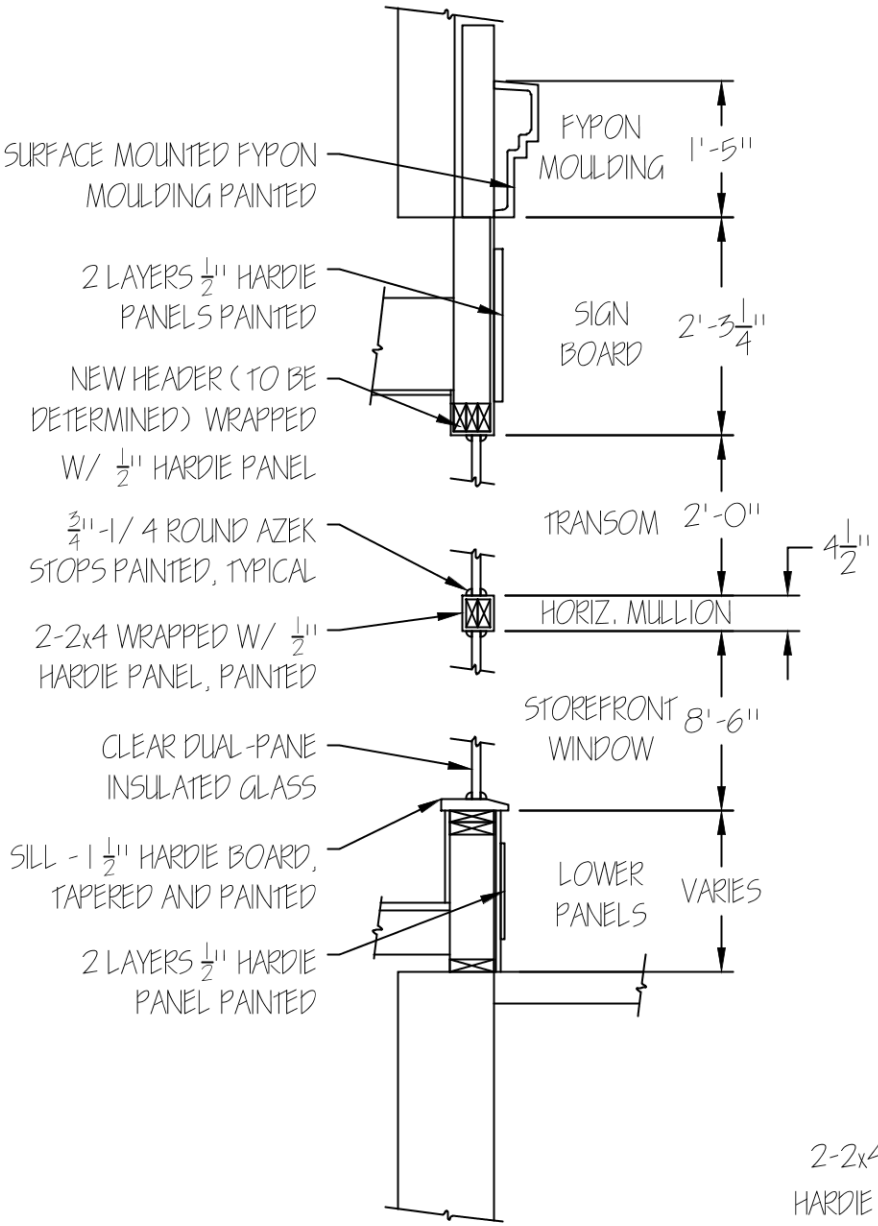

STOREFRONT SECTION

SCALE: 1/2" = 1'-0"

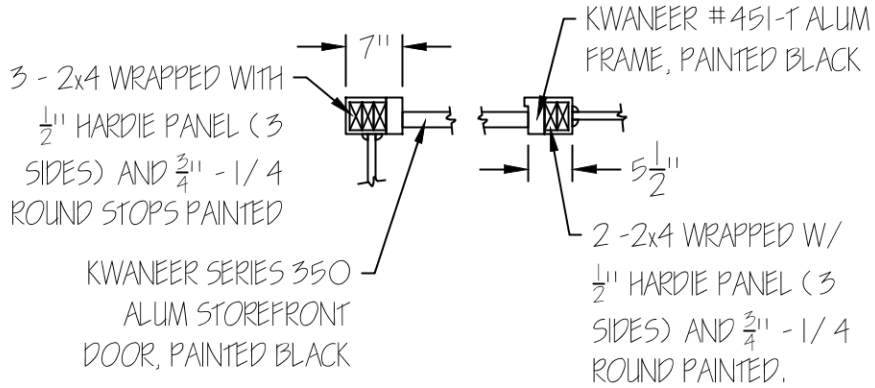

INSIDE CORNER SECTION

SCALE: 1/2" = 1'-0"

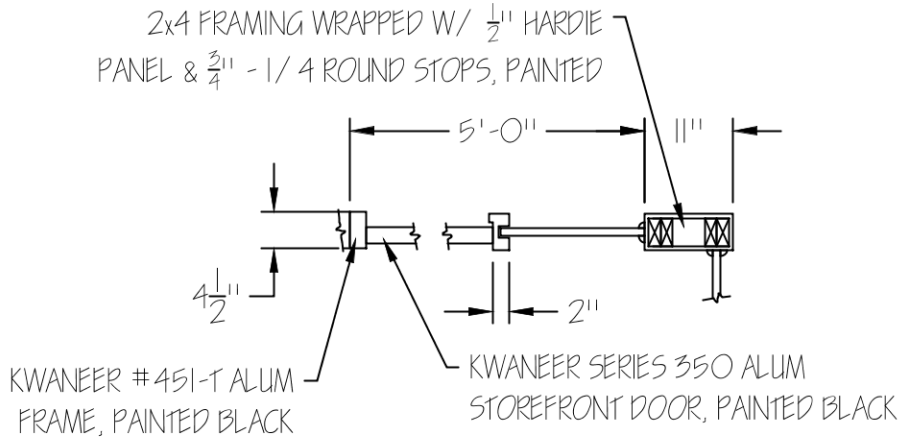

INSIDE CORNER SECTION

SCALE: 1/2" = 1'-0"

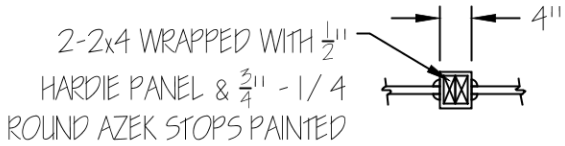

VERTICAL MULLION SECTION

SCALE: 1/2" = 1'-0"

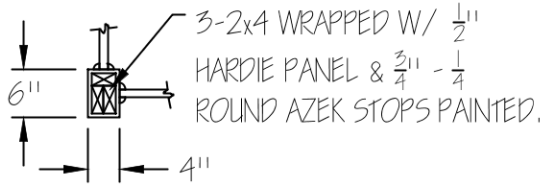

OUTSIDE CORNER SECTION

SCALE: 1/2" = 1'-0"

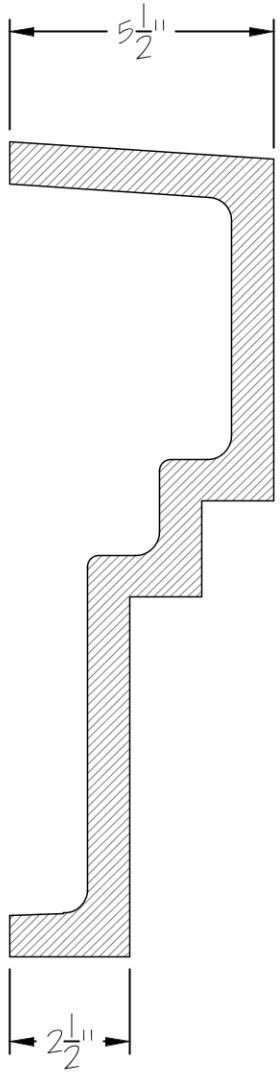

17" MOULDING PROFILE

SCALE: 3"=1'-0"

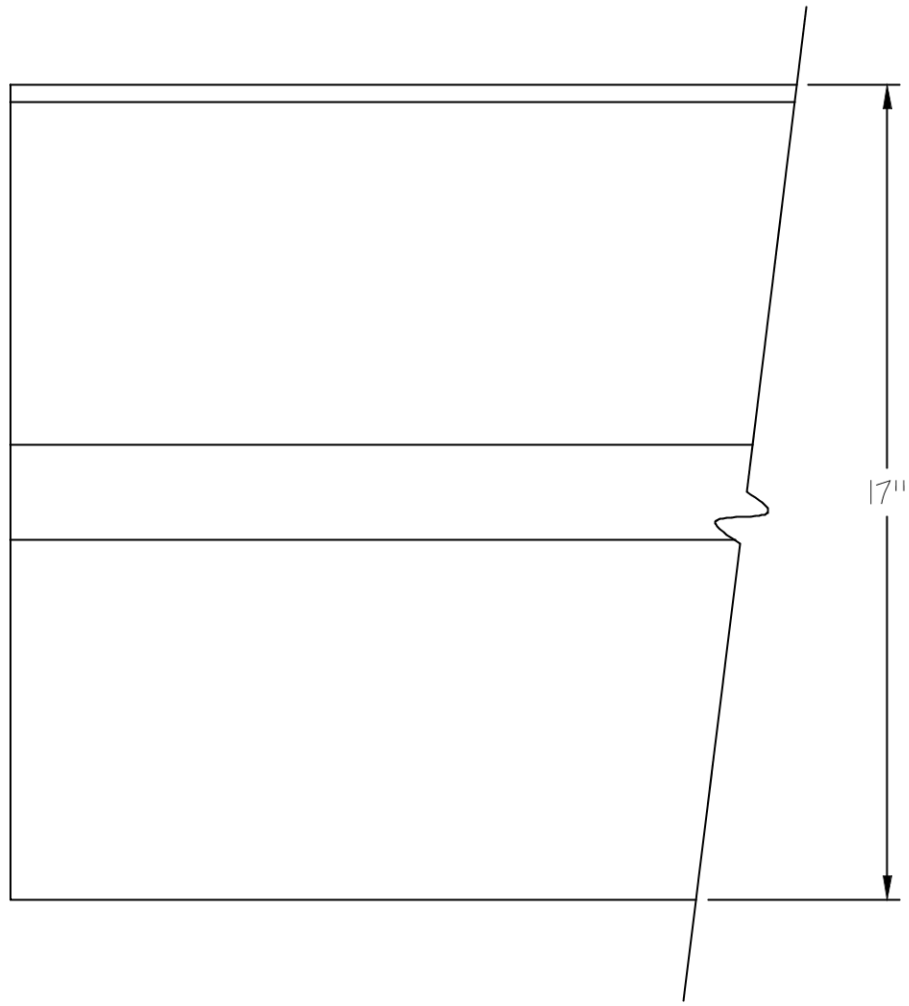

17" MOULDING FRONT VIEW

SCALE: 3"=1'-0"

"FYPON" #MLD533, POLYURETHANE, MOULDING FASCIA, PAINTED

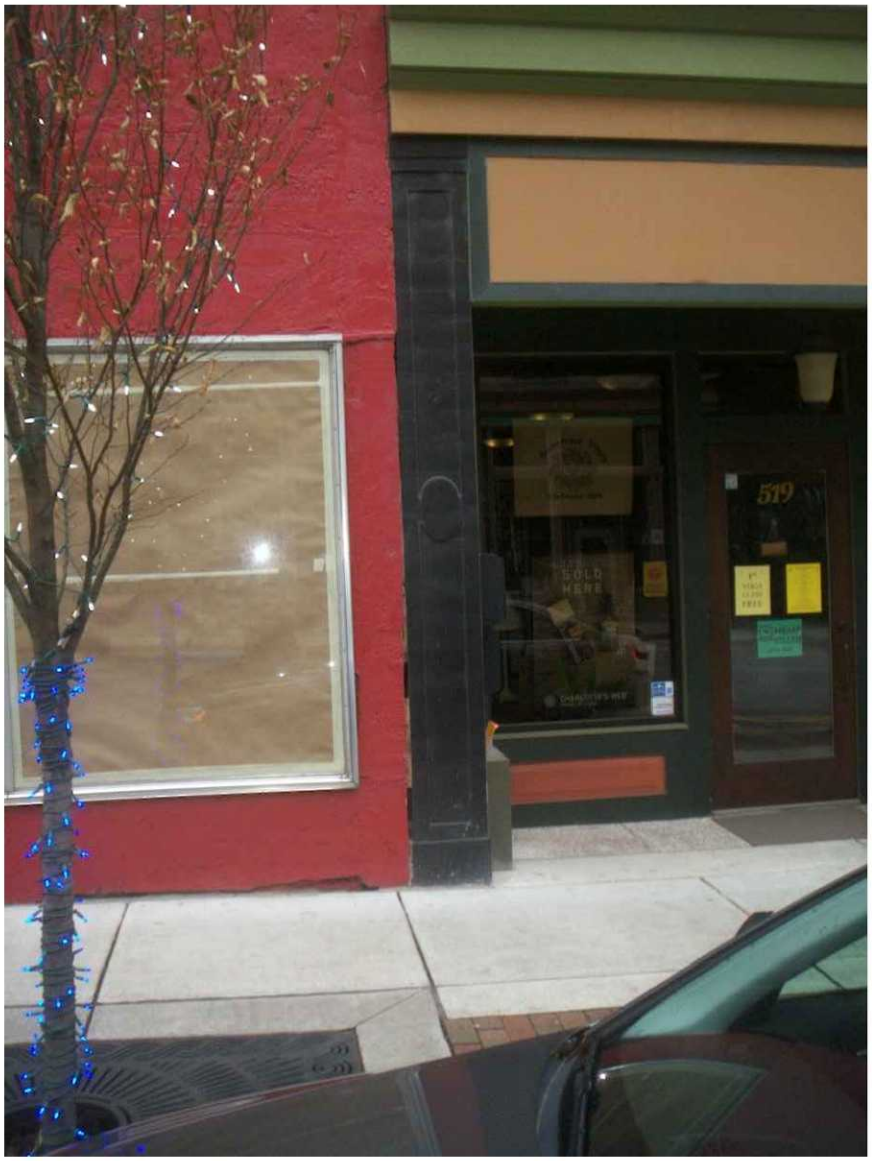
519

LAFAYETTE HISTORIC PRESERVATION COMMISSION

515 Columbia Street Lafayette, IN 47901 765-807-1090

APPLICATION FOR CERTIFICATE OF APPROPRIATENESS (COA)

OFFICE USE ONLY******DO NOT COMPLETE ANY ENTRIES CONTAINED IN THIS BOX********OFFICE USE ONLY**

Date Received: 1/16/20 Date Approved COA Expires:_____

LOCAL HISTORIC DISTRICT OF PROJECT DOWNTOWN

___Approved, ___Approved with Amendments, ___Denied, ___Tabled, ___Withdrawn by Owner

Approved By:_____Date:_____

ADDRESS OF PROJECT: 315 Columbia Street Lafayette, IN 47901

Brief description of proposed work: (Please PRINT CLEARLY or TYPE)

If necessary for description please attach additional sheet.

See attached written description

What are the approximate start and finish dates of the proposed work?

Start Early Spring Completion_____

Present use of property: Office space for current tenant on 1st and 2nd floor, 3rd floor unused

Proposed use of property: R-2 (Residential) 2nd and 3rd floor only, 1st floor to remain as-is

APPLICANT (Please PRINT CLEARLY or TYPE)

Name: Barry Knechtel
Mailing Address: 527 Sagamore Parkway West, West Lafayette, IN 47906
Phone: (765) 497-4598
E-Mail barry@kjgarchitecture.com

APPLICANT relationship to Owner ___Contractor, X Architect, ___Realtor, ___Agent, ___Other

PROPERTY OWNER (Please PRINT CLEARLY or TYPE)

Name: Ryan Kennedy
Mailing Address: 315 Columbia Street Lafayette, IN 47901
Phone: (765) 426-2604
E-Mail: ryan@kennedyhomeslafayette.com

CONTRACTOR (Please PRINT CLEARLY or TYPE)

Name: N/A
Mailing Address: N/A
Phone: N/A
E-Mail: N/A

CONTACT PERSON: Barry Knechtel or Shelby Harris Phone: (765) 497-4598

E-Mail: barry@kjgarchitecture.com or shelbyh@kjgarchitecture.com

ESTIMATED COST OF PROJECT: $250,000

SIGNAGE (Additional Documentation)

(Check-mark all that apply)

____Color photo(s) of the entire building with proposed location of the signage indicated.

____Close-up photo of the proposed signage location

____Detailed drawings showing the dimensions of the sign and how it will be attached to the building

____Description of the proposed sign and bracket materials, dimensions, sign lettering, signage lighting, and method of attachment to the building. We recommend you use existing holes where possible. If new anchorage holes are necessary, place anchorage in existing mortar joints and avoid damaging existing bricks and permanent exposed building materials.

Please note: Signage area and permits must be approved by the City of Lafayette Engineering Department.

STOREFRONTS/FACADES, AWNINGS, SHUTTERS, AND OTHER ARCHITECTURAL ELEMENTS (Additional Documentation)

(Check-mark all that apply)

____Clear description, photos and elevation drawings of proposed signage, lighting, awnings, security systems, and accessibility provisions (i.e. lifts, ramps, handrails etc.).

____Color photos/elevations showing storefront/ façade of all floors as they relate to all proposed work.

____ Drawings specifying the plan, section, and construction details.

NEW CONSTRUCTION, ADDITIONS, GARAGES, AND CARRIAGE HOUSES (Additional Documentation)

(Check-mark all that apply)

X Same requirements as listed on page 2 under **Documentation to be submitted with application**

STOOPS, STEPS, FENCES, HANDRAILS, PORCHES, AND BALCONIES (Additional Documentation)

(Check-mark all that apply)

____Color photos and construction plans detailing the location of the proposed stoops, steps, fences, handrails, porches, and balconies.

____Drawings specifying the proposed work, construction details, and installation method for all improvements under this section.

____Drawings of existing conditions without the proposed work

ROOFS (Additional Documentation)

(Check-mark all that apply)

____Color photos detailing the location of the roof(s)

____Drawings specifying the plans, construction details, and installation methods.

STREETSCAPING (Additional Documentation)

(Check-mark all that apply)

____Drawings and specifications of proposed site plan, including trees, plantings, grates, sidewalk amenities, signage, art work, sculptures, fountains, benches, tables, seating, etc.

____Drawings of the existing conditions without the proposed work

Please note: If the COA is approved, any changes or amendments to the approved COA will require additional review by city staff or the Historic Preservation Commission. An approved COA is valid for 12 months from the date of approval of the COA. After 12 months COA application must be resubmitted and reapproved by the HPC or Staff to continue the project.

REQUIRED SIGNATURE: The undersigned certifies that the statements set forth in this application including all drawings and specifications submitted herewith are true and correct, and agrees that the proposed improvements described in this application will be constructed in all respects in accordance with the approved COA as specified in the application, drawings and specifications submitted herewith. The undersigned further agrees to abide by any amendments approved to be part of this project by the Lafayette Historic Preservation Commission or Staff.

Applicant: (Print clearly or type) BARRY KNECHTEL

Signature of Applicant: _____ Date: 1/16/2020

Owner Print clearly or type) _____

Signature of Owner (if different): _____ Date: _____

APPLICATIONS AND DOCUMENTATION:
Applicant must provide 13 copies of the completed and signed COA Application and all documentation noted to be submitted with COA Application including: Materials to be used, detailed written description of the project with dimensions, drawings to scale, construction methods, finishes, manufacturing brochures and specifications as well as clearly labeled photographs of the building and affected areas. Plus any additional documentation as requested by Staff or the COA Committee. Electronic versions may be submitted if available in addition to the 13 copies noted above. The copies will be supplied to each Commissioner and the City Staff for the Lafayette Historic Preservation meeting.

The Commission follows the Secretary of Interior's Standards for Rehabilitation and Guidelines for Rehabilitation Historic Buildings when reviewing applications. Applications should follow these standards and guidelines when applicable. Additional guidelines, Preservation Briefs, Bulletins and "The Resource Guide", can be accessed on line at www. Lafayette.in.gov

Certain work in a Historic District may be approved by the Staff in lieu of being reviewed by the Lafayette Historic Preservation Commission, but the applicant will still be required to submit this application for Staff review with all documentation as noted for the proposed project.
Staff is authorized to approve the following: Signs that comply with the guidelines, Installation of storm windows, Installation of re-skinning of canvas awnings and canopies of a simple design, Installation of historically appropriate hand rails, Temporary removal of historic building components for the purpose of repair, Replacement of roof sheathing when there are no structural changes, Removal of chimneys that are only visible from the rear of a structure, Installation of stained or leaded glass windows, Installation of appropriate historical shutters, Removal of a non-original addition or alteration to a structure, and Extension of an approved COA for up to one additional year if the project scope has not changed. If questionable, please contact Staff to determine whether your project must be reviewed by the Lafayette Historic Preservation Commission.

KJG Architecture, Incorporated
An Architecture and Engineering Company

315 COLUMBIA STREET – BUILDING RENOVATION
LAFAYETTE, INDIANA

WRITTEN PROJECT DESCRIPTION.

DATE: January 16, 2020

PROJECT: Ryan Kennedy Apartments
Project No. A2019.069

The Ryan Kennedy apartment project will be a renovation of the 3-story building on 315 Columbia Street in downtown Lafayette, Indiana. The 2nd and 3rd floor will be divided into multiple dwelling units while the 1st floor will remain in as-is condition. The exterior façade on the front, side and back will be restored to maintain the local district aesthetic.

An addition on the back of the 3rd floor will be added to increase floor area. This will allow for (4) dwelling units, (2) per floor, to be added as well as a new leasing office and restroom. Interior stairs will remain in as-is condition while walls and ceilings will be finished. Some units will have exposed ceilings and walls to showcase the ceiling structure and existing brick.

Listed below are exterior materials and colors for the front, side and back building elevations:

North Elevation (front)
- Brick "Benson" façade on 2nd and 3rd floor with a cast stone decorative banding.
- Large windows on 2nd and 3rd floor to be replaced with Marvin aluminum clad "Bahama Brown" windows with cast stone header and sill.
- 1st floor windows to remain and be repainted, see elevations for colors.
- Doors to be refinished to original color and appearance.

South Elevation (back)
- EIFS entire back side, see elevations for colors
- 1st floor windows to remain and be repainted.
- Windows on 2nd floor to be replaced with Marvin aluminum clad "Bahama Brown" casement windows for egress.
- New windows on 3rd floor to be Marvin aluminum clad "Bahama Brown" windows.
- Door to be replaced to match existing dark wood front doors
- All windows and doors to have EIFS trim board, see elevations for colors.

West Elevation (side)
- EIFS on 3rd floor, see elevations for colors
- Existing CMU and Stucco to be repainted, see elevations for colors
- Existing 3rd floor exterior wall to be repainted to match EIFS
- All Windows to be Marvin aluminum clad "Bahama Brown" windows with EIFS trim board.

*See exterior elevations (Sheet C) for color and details.

527 Sagamore Pkwy W., West Lafayette, IN 47906 Office 765.497.4598 Fax 765.497.4599

1 A ARCHITECTURAL SITE PLAN
SCALE: 1/16"=1'-0"

N

KJG Architecture, Inc.
527 Sagamore Parkway W., Suite 101
West Lafayette, Indiana 47906
Office: 765.497.4598 Fax: 765.497.4599
www.kjgarchitecture.com

PROJECT TITLE:
RYAN KENNEDY APARTMENTS
315 COLUMBIA STREET
LAFAYETTTE, IN 47901

DISCLAIMER:
This is an original design, created by KJG Architecture, Inc. The concepts, ideas, plans and details are the sole property of KJG Architecture, Inc. None of the aforementioned shall be used by or disclosed to any person, firm or organization for any purpose without the prior written permission of KJG Architecture, Inc.

PROFESSIONAL SEAL:

PROJECT DATE:
01/10/2020

No.	DESCRIPTION:	DRAWN BY:	DATE ISSUED:

PROJECT NUMBER: A2019.069
DRAWN BY:

DRAWING TITLE:
ARCHITECTURAL SITE PLAN

SHEET NUMBER:
A

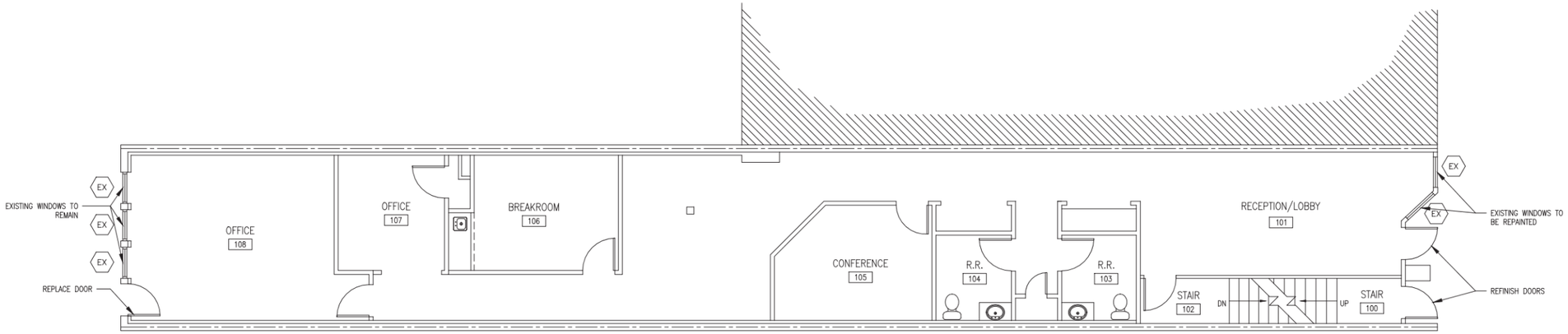

3 B FIRST FLOOR PLAN
SCALE: 3/16"=1'-0"

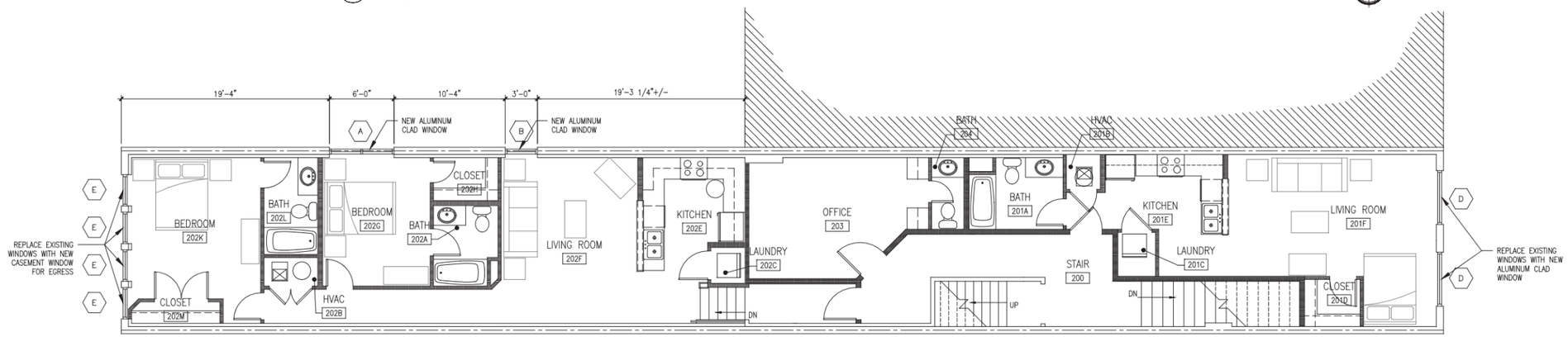

2 B SECOND FLOOR PLAN
SCALE: 3/16"=1'-0"

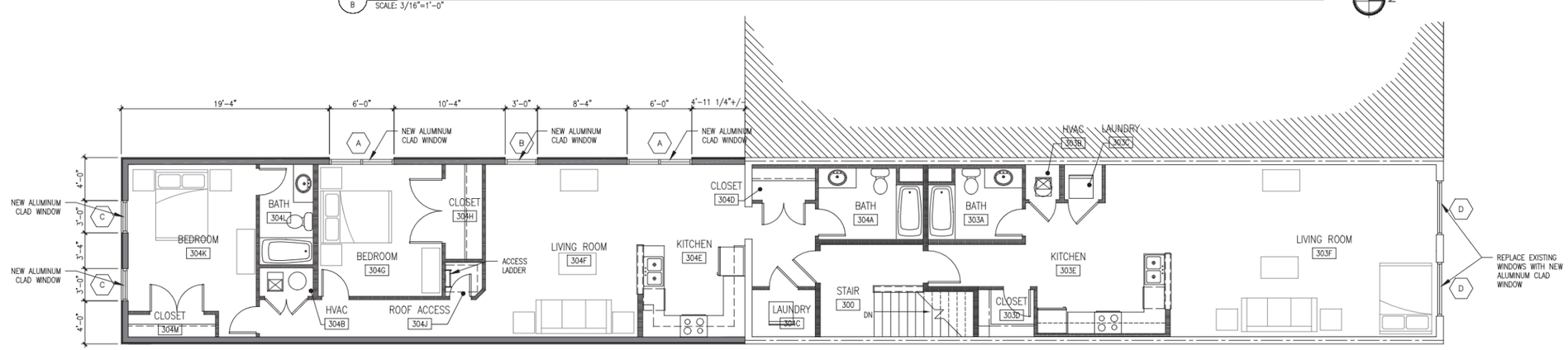

1 B THIRD FLOOR PLAN
SCALE: 3/16"=1'-0"

* SEE ELEVATIONS AND EXTERIOR DETAILS FOR MORE INFORMATION ON COLORS AND MATERIALS

UNIT LEGEND

UNIT	TOTAL AREA	BEDS	BATHS
APARTMENT 01	500 SQ. FT.	STUDIO	1
APARTMENT 02	963 SQ. FT.	2	2
APARTMENT 03	738 SQ. FT.	STUDIO	1
APARTMENT 04	1099 SQ. FT.	2	2
TOTAL:	3,300 SQ. FT.	6	6

KJG Architecture, Inc.
527 Sagamore Parkway W., Suite 101
West Lafayette, Indiana 47906
Office: 765.497.4598 Fax: 765.497.4599
www.kjgarchitecture.com

PROJECT TITLE:
RYAN KENNEDY APARTMENTS
315 COLUMBIA STREET
LAFAYETTTE, IN 47901

DISCLAIMER:
This is an original design, created by KJG Architecture, Inc. The concepts, ideas, plans and details are the sole property of KJG Architecture, Inc. None of the aforementioned shall be used by or disclosed to any person, firm or organization for any purpose without the prior written permission of KJG Architecture, Inc.

PROFESSIONAL SEAL:

PROJECT DATE:
01/10/2020

No.	DESCRIPTION:	DRAWN BY:	DATE ISSUED:

PROJECT NUMBER: A2019.069
DRAWN BY:

DRAWING TITLE:
PROPOSED FLOOR PLANS

SHEET NUMBER:
B

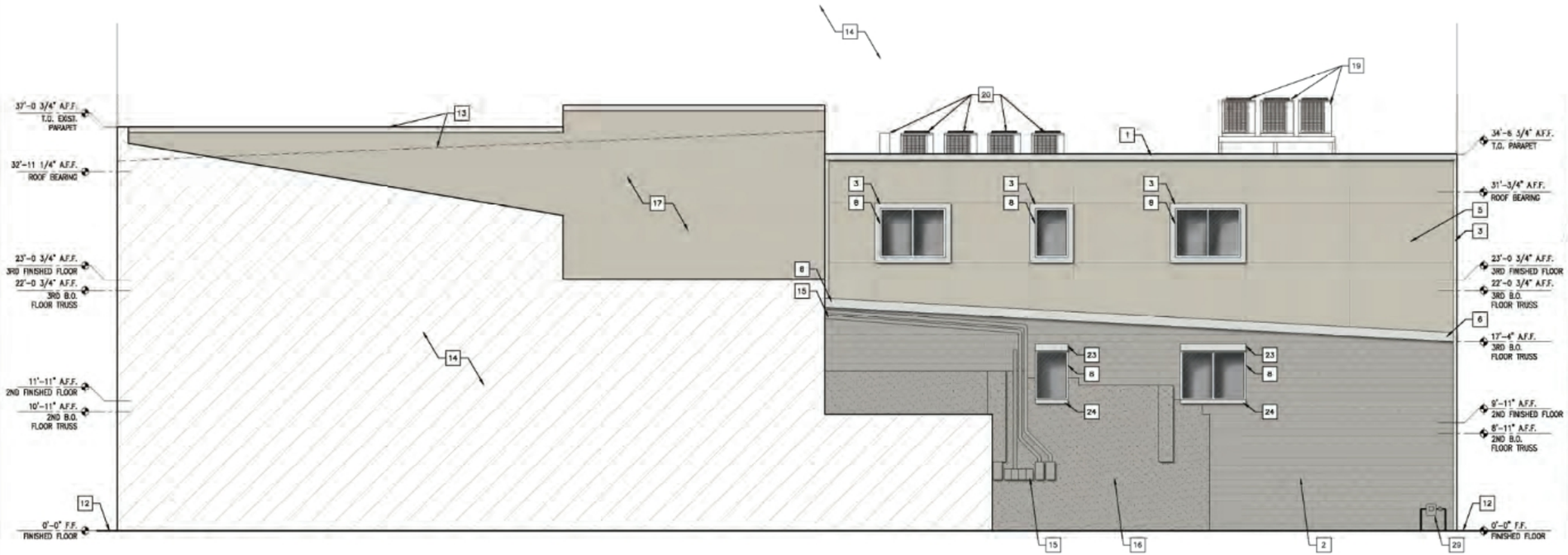

3 C WEST BUILDING ELEVATION
SCALE: 3/16"=1'-0"

2 C NORTH BUILDING ELEVATION
SCALE: 3/16"=1'-0"

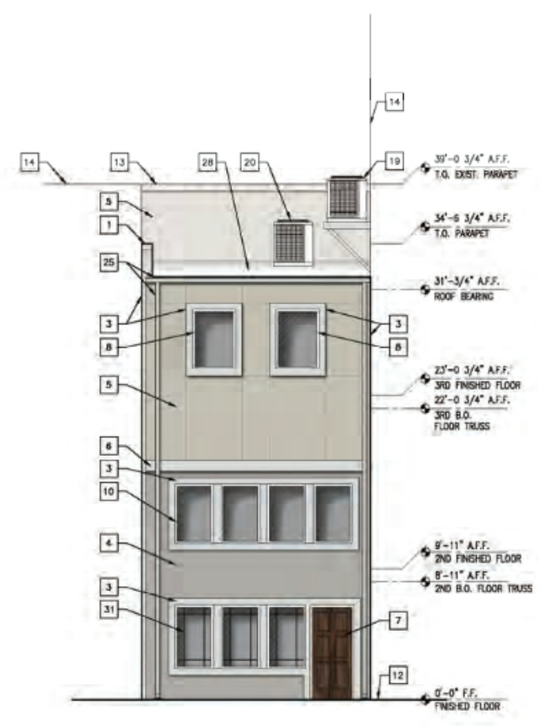

1 C SOUTH BUILDING ELEVATION
SCALE: 3/16"=1'-0"

GENERAL ELEVATION NOTES:

A. ALL DIMENSIONS SHALL BE FIELD VERIFIED.
B. ALL DIMENSIONS ARE TO FACE OF STUD OR MASONRY UNLESS NOTED OTHERWISE.
C. ALL WORK SHALL BE COMPLETED IN STRICT ACCORDANCE WITH ALL APPLICABLE CODES.
D. MANUFACTURER'S LISTED IN THE CONSTRUCTION DOCUMENTS ARE FOR "BASIS OF DESIGN." ANY SUBSTITUTIONS SHALL MEET AND/OR EXCEED ALL PERFORMANCE AND ASTM STANDARDS TO BE QUALIFIED AS EQUAL AND SHALL BE APPROVED BY THE OWNER AND ARCHITECT OF RECORD.
E. COLOR AND TEXTURE OF MATERIAL, IF NOT INDICATED, SHALL BE APPROVED BY THE OWNER AND THE ARCHITECT PRIOR TO INSTALLATION.
F. ALL DOOR/WINDOW HARDWARE SHALL BE INSTALLED AND FIELD ADJUSTED PER MANUFACTURER'S REQUIREMENTS.
G. ALL COLOR SELECTION ARE TO BE SUBMITTED TO THE OWNER FOR FINAL APPROVAL.
H. SEE FINISH SCHEDULE FOR MORE INFORMATION

ELEVATION KEYNOTES:

1. PARAPET CAP – COLOR 3
2. EXISTING CMU BLOCK TO BE REPAINTED – COLOR 1
3. 1" THICK SMOOTH FACE EIFS TRIM BOARD. 4" TRIM AT CORNERS OF BUILDING, 6" TRIM AT WINDOWS AND DOORS – COLOR 3
4. EIFS – COLOR 1
5. EIFS – COLOR 2
6. 10" SMOOTH FACE EIFS TRIM BOARD – COLOR 3
7. ENTRY DOOR, SEE EXTERIOR DETAILS
8. NEW ALUMINUM CLAD WOOD INTERIOR CASEMENT WINDOW, MARVIN ULTIMATE OR APPROVED EQUAL, COLOR: "STONE WHITE"
9. REPLACE EXISTING WINDOW WITH NEW ALUMINUM CLAD WOOD INTERIOR WINDOW, MARVIN ULTIMATE WOOD DOUBLE HUNG MAGNUM OR APPROVED EQUAL, COLOR: "BAHAMA BROWN"
10. REPLACE EXISTING WINDOW WITH NEW ALUMINUM CLAD WOOD INTERIOR CASEMENT WINDOW, MARVIN ULTIMATE OR APPROVED EQUAL, COLOR: "STONE WHITE"
11. EXISTING WINDOWS TO BE REPAINTED TO MATCH NEW WINDOWS
12. APPROXIMATE GRADE
13. EXISTING ROOF AND PARAPET CAP TO REMAIN. PARAPET CAP TO BE REPAINTED – COLOR 3
14. EXISTING BUILDING, NOT IN SCOPE OF PROJECT
15. ELECTRICAL METERS AND CONDUIT TO REMAIN
16. STUCCO TO BE REPAINTED – COLOR 1
17. EXISTING BUILDING EXTERIOR WALL TO BE REPAINTED – COLOR 2
18. DOWNSPOUT TO BE REPAINTED – COLOR 1
19. EXISTING MECHANICAL UNITS FOR ADJACENT BUILDING TO EITHER BE MOUNTED ON ADJACENT BUILDINGS WALL OR ROOF
20. NEW MECHANICAL UNITS
21. 4" TALL CAST STONE BAND, COLOR TO MATCH COLOR 2
22. THIN BRICK VENEER, GLEN-GERY BENSON OR APPROVED EQUAL
23. CAST STONE HEADER, FRONT (COLOR TO MATCH COLOR 2), SIDE (COLOR TO MATCH COLOR 3)
24. CAST STONE SILL, FRONT (COLOR TO MATCH COLOR 2), SIDE (COLOR TO MATCH COLOR 3)
25. 4X6 DOWNSPOUT WITH GUTTER – COLOR 2
26. TRIM TO BE REPAINTED – COLOR 1
27. TRIM TO BE REPAINTED – COLOR 2
28. EPDM ROOFING MATERIAL – COLOR WHITE
29. GAS METER
30. EXTERIOR LIGHTING
31. EXISTING WINDOWS TO REMAIN

MATERIAL/COLOR LEGEND

BRICK - GLEN-GERY BENSON

COLOR 1 - EIFS ANTIQUE GRAY (618)
PAINT SW 9170 ACIER

COLOR 2 - EIFS GULL GRAY (131)
PAINT SW 7016 MINDFUL GRAY

COLOR 3 - EIFS TWILIGHT GRAY (627A)

EXTERIOR LIGHTING

*COLORS MAY VARY DEPENDING ON MANUFACTURER

KJG Architecture, Inc.
527 Sagamore Parkway W., Suite 101
West Lafayette, Indiana 47906
Office: 765.497.4598 Fax: 765.497.4590
www.kjgarchitecture.com

PROJECT TITLE:
RYAN KENNEDY APARTMENTS
315 COLUMBIA STREET
LAFAYETTTE, IN 47901

DISCLAIMER:
This is an original design, created by KJG Architecture, Inc. The concepts, ideas, plans and details are the sole property of KJG Architecture, Inc. None of the aforementioned shall be used by or disclosed to any person, firm or organization for any purpose without the prior written permission of KJG Architecture, Inc.

PROFESSIONAL SEAL:

PROJECT DATE:
01/10/2020

No.	DESCRIPTION:	DRAWN BY:	DATE ISSUED:

PROJECT NUMBER: A2019.069
DRAWN BY:

DRAWING TITLE:
EXTERIOR ELEVATIONS

SHEET NUMBER:
C

DOOR TO BE REFINISHED TO ORIGINAL COLOR AND APPEARANCE

WINDOWS TO REMAIN AND REPAINT TRIM

1 D FRONT OF BUILDING
SCALE: N.T.S.

EXISTING DOUBLE HUNG WINDOWS TO BE REPLACED TO ALUMINUM DOUBLE HUNG WINDOW. EXISTING WINDOWS SHOW CONDENSATION AND WATER DAMAGE DUE TO SINGLE PANE GLASS

1 D FRONT OF BUILDING
SCALE: N.T.S.

WINDOW SCHEDULE

MARK	ELEV.	SIZE		FRAME		DETAIL			GLAZING TYPE	HEADER HEIGHT	REMARKS	MARK
		WIDTH	HEIGHT	TYPE	FINISH	HEAD	JAMB	SILL				
A	W1	6'-0"	4'-6"	ALUM2	PRE	–	–	–	G1			A
B	W2	3'-0"	4'-6"	ALUM2	PRE	–	–	–	G1			B
C	W3	3'-3"	4'-6"	ALUM2	PRE	–	–	–	G1			C
D	W4	±4'-7"	±6'-10"	ALUM1	PRE	–	–	–	G1		* NEW WINDOW IN EXISTING WINDOW OPENING, VERIFY DIMENSIONS IN FIELD	D
E	W5	±2'-11"	±4'-6"	ALUM2	PRE	–	–	–	G1		* NEW WINDOW IN EXISTING WINDOW OPENING, VERIFY DIMENSIONS IN FIELD	C
EX											EXISTING WINDOW TO REMAIN	

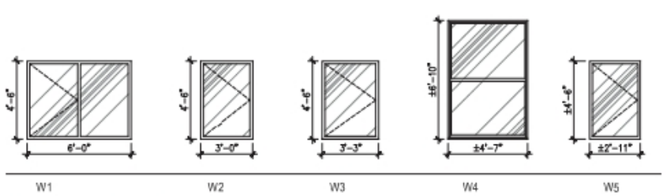

WINDOW ELEVATION

WINDOW & FRAME LEGEND:

WINDOWS:

ALUM1 ALUMINUM CLAD WOOD INTERIOR MARVIN ULTIMATE DOUBLE HUNG MAGNUM WINDOW

ALUM2 ALUMINUM CLAD WOOD INTERIOR MARVIN ULTIMATE CASEMENT WINDOW

WINDOW FRAME FINISH & GLAZING LEGEND:

GLAZING:

G1 1" INSULATING CLEAR/CLEAR GLASS ASSEMBLY W/ 1/2" ARGON FILLED LOW-E

G2 SAME AS G1 BUT TEMPERED

FINISH:

PRE PREFINISHED ALUMINUM PER MANUFACTURERS STANDARD FINISHES.

MECHANICAL EQUIPMENT WILL NEED TO BE RELOCATED ON ADJACENT BUILDINGS WALL OR ROOF

WINDOWS NEED TO BE REPLACED TO CASEMENT WINDOWS TO ALLOW FOR PROPER EGRESS

DOOR TO BE REPLACED WITH NATURAL WOOD DOOR WITH SIMILAR PROFILE. COLOR TO BE SIMILAR TO THE DOORS ON THE NORTH (FRONT) OF THE BUILDING.

WINDOWS TO REMAIN

1 D BACK OF BUILDING
SCALE: N.T.S.

KJG Architecture, Inc.
527 Sagamore Parkway W., Suite 101
West Lafayette, Indiana 47906
Office: 765.497.4598 Fax: 765.497.4599
www.kjgarchitecture.com

PROJECT TITLE:
RYAN KENNEDY APARTMENTS
315 COLUMBIA STREET
LAFAYETTTE, IN 47901

DISCLAIMER:
This is an original design, created by KJG Architecture, Inc. The concepts, ideas, plans and details are the sole property of KJG Architecture, Inc. None of the aforementioned shall be used by or disclosed to any person, firm or organization for any purpose without the prior written permission of KJG Architecture, Inc.

PROFESSIONAL SEAL:

PROJECT DATE:
01/10/2020

No.	DESCRIPTION:	DRAWN BY:	DATE ISSUED

PROJECT NUMBER: A2019.069
DRAWN BY:

DRAWING TITLE:
EXTERIOR DETAILS

SHEET NUMBER:
D

4 E COLUMBIA STREET LOOKING SOUTH
SCALE: N.T.S.

3 E FRONT OF BUILDING
SCALE: N.T.S.

2 E BACK ALLEY LOOKING NORTHWEST
SCALE: N.T.S.

1 E BACK ALLEY LOOKING NORTHEAST
SCALE: N.T.S.

KJG Architecture, Inc.
527 Sagamore Parkway W., Suite 101
West Lafayette, Indiana 47906
Office: 765.497.4598 Fax: 765.497.4599
www.kjgarchitecture.com

PROJECT TITLE:
RYAN KENNEDY APARTMENTS
315 COLUMBIA STREET
LAFAYETTTE, IN 47901

DISCLAIMER:
This is an original design, created by KJG Architecture, Inc. The concepts, ideas, plans and details are the sole property of KJG Architecture, Inc. None of the aforementioned shall be used by or disclosed to any person, firm or organization for any purpose without the prior written permission of KJG Architecture, Inc.

PROFESSIONAL SEAL:

PROJECT DATE:
01/10/2020

No.	DESCRIPTION:	DRAWN BY:	DATE ISSUED:

PROJECT NUMBER: A2019.069
DRAWN BY:

DRAWING TITLE:
ADJACENT PICTURES

SHEET NUMBER:
E