LAFAYETTE HISTORIC PRESERVATION COMMISSION

515 Columbia Street Lafayette, IN 47901 765-807-1090

APPLICATION FOR CERTIFICATE OF APPROPRIATENESS (COA)

OFFICE USE ONLY********DO NOT COMPLETE ANY ENTRIES CONTAINED IN THIS BOX********OFFICE USE ONLY

Date Received:_____ Date Approved COA Expires:_____

LOCAL HISTORIC DISTRICT OF PROJECT_____

___Approved, ___Approved with Amendments, ___Denied, ___Tabled, ___Withdrawn by Owner

Approved By:_____Date:_____

ADDRESS OF PROJECT: 521 MAIN ST.

Brief description of proposed work: (Please PRINT CLEARLY or TYPE)

If necessary for description please attach additional sheet. REMOVE SHEET METAL, RESTORE EXISTING VERTICAL FEATURES, PROVIDE NEW STOREFRONT DOORS, WINDOWS, TRANSOM, SIGN BOARD AND CORNICE.

What are the approximate start and finish dates of the proposed work?

Start FEB 2020 Completion APR. 2020

Present use of property: VACANT

Proposed use of property: WEST SUITE OFFICE, OTHER SPACES STILL VACANT

APPLICANT (Please PRINT CLEARLY or TYPE)

Name: G. KURT WAHL, WAHL ARCHITECTURE
Mailing Address: 1815 UNDERWOOD ST., LAFAYETTE, IN 47904
Phone: 765-429-5880
E-Mail KURT @ WAHLARCH.COM

APPLICANT relationship to Owner ___Contractor, X Architect, ___Realtor, ___Agent, ___Other

PROPERTY OWNER (Please PRINT CLEARLY or TYPE)

Name: ROBERT HOCKEMA
Mailing Address: P.O. Box 1458 Lafayette, IN 47902
Phone: 765-479-1255
E-Mail: roberthockema@yahoo.com

CONTRACTOR (Please PRINT CLEARLY or TYPE)

Name: INTEGRATE BUILD
Mailing Address: 2800 FERRY ST., LAFAYETTE, IN 47905, SUITE B
Phone: 765 426 1743
E-Mail: TGALL @ INTEGRATEBUILD.COM

CONTACT PERSON: G. KURT WAHL Phone: 765-429-5880

E-Mail: KURT @ WAHLARCH.COM

ESTIMATED COST OF PROJECT: $ 25,000

The Lafayette Historic Preservation Commission is a nine-member board who meets monthly to review the COA applications that are subject to commission review.
The Lafayette Historic Preservation Commission cannot render judgment nor process an Application without the specific documentation listed below. It is the Applicant/Owner who must provide comprehensive documentation of the proposed project with adequate information so that there is a complete understanding of the project for the commissioners and staff when rendering a decision. Applications will NOT be processed without all required or requested documentation. An incomplete COA application may delay the COA review process.

These items must have been completed before submitting application: (Please check yes or no below)

1. **Are all zoning approvals met and in compliance for the proposed work? Yes_X_ No___**
2. **Are there any Variances pending or necessary for the proposed work? Yes___ No_X_**

Documentation to be submitted with application: (Minimum requirements for all COA Applications)

(Please place a check-mark at each listed item below that you include with this application)

_X_ Photos of building exterior (all visible elevations) maximum of 4 photos to a 8 ½"x11" sheet
_X_ Complete drawings of proposed project
_X_ Floor plans of affected levels
_X_ Exterior elevations of all areas where work will occur (minimum 11"x17" sheet)
_X_ Signed application
___ Site plan (If project affects ground floor exterior)
_X_ Sample or brochure plus specifications and color samples of all permanent materials to be used
_X_ Written description of proposed project and 1 set of full-sized plans
_X_ Photos of adjacent or attached structures showing locations of connection
_X_ Electronic versions of complete drawings of the proposed project are acceptable

NOTE: See categories below for specific projects and additional documentation as applicable.

WINDOW PROJECTS (Additional Documentation)

(Check-mark all that apply)

___ Elevation drawings of each window type
___ Window section drawing(s): with head, sill, jamb, mullion, and muntins with all dimensions
___ Condition statement of existing windows describing the type and extent of deterioration for windows to be removed or replaced. If replacement windows are proposed, submit photos showing condition and extent of deterioration.
___ Note indicating whether or not windows are original
___ Note on plan and elevations which windows are new and which are original to remain
___ Note materials to fill in opening and indicate structure to be removed if applicable

DOOR(S) PROJECTS (Additional Documentation)

(Check-mark all that apply)

___ Close –up photo(s) of the existing door(s) to be replaced and photos of doors on adjacent buildings
___ Condition statement of the existing doors describing the type and extent of deterioration
___ Door elevation drawing(s) of each door type
___ Door section(s)
___ Note on plan and elevations which doors are new and which are original to remain

SIGNAGE (Additional Documentation)

(Check-mark all that apply)

____Color photo(s) of the entire building with proposed location of the signage indicated.

____Close-up photo of the proposed signage location

____Detailed drawings showing the dimensions of the sign and how it will be attached to the building

____Description of the proposed sign and bracket materials, dimensions, sign lettering, signage lighting, and method of attachment to the building. We recommend you use existing holes where possible. If new anchorage holes are necessary, place anchorage in existing mortar joints and avoid damaging existing bricks and permanent exposed building materials.

Please note: Signage area and permits must be approved by the City of Lafayette Engineering Department.

STOREFRONTS/FACADES, AWNINGS, SHUTTERS, AND OTHER ARCHITECTURAL ELEMENTS (Additional Documentation)

(Check-mark all that apply)

_X_Clear description, photos and elevation drawings of proposed signage, lighting, awnings, security systems, and accessibility provisions (i.e. lifts, ramps, handrails etc.).

_X_Color photos/elevations showing storefront/ façade of all floors as they relate to all proposed work.

_X_ Drawings specifying the plan, section, and construction details.

NEW CONSTRUCTION, ADDITIONS, GARAGES, AND CARRIAGE HOUSES (Additional Documentation)

(Check-mark all that apply)

____Same requirements as listed on page 2 under **Documentation to be submitted with application**

STOOPS, STEPS, FENCES, HANDRAILS, PORCHES, AND BALCONIES (Additional Documentation)

(Check-mark all that apply)

____Color photos and construction plans detailing the location of the proposed stoops, steps, fences, handrails, porches, and balconies.

____Drawings specifying the proposed work, construction details, and installation method for all improvements under this section.

____Drawings of existing conditions without the proposed work

ROOFS (Additional Documentation)

(Check-mark all that apply)

____Color photos detailing the location of the roof(s)

____Drawings specifying the plans, construction details, and installation methods.

STREETSCAPING (Additional Documentation)

(Check-mark all that apply)

____Drawings and specifications of proposed site plan, including trees, plantings, grates, sidewalk amenities, signage, art work, sculptures, fountains, benches, tables, seating, etc.

____Drawings of the existing conditions without the proposed work

Please note: If the COA is approved, any changes or amendments to the approved COA will require additional review by city staff or the Historic Preservation Commission. An approved COA is valid for 12 months from the date of approval of the COA. After 12 months COA application must be resubmitted and reapproved by the HPC or Staff to continue the project.

REQUIRED SIGNATURE: The undersigned certifies that the statements set forth in this application including all drawings and specifications submitted herewith are true and correct, and agrees that the proposed improvements described in this application will be constructed in all respects in accordance with the approved COA as specified in the application, drawings and specifications submitted herewith. The undersigned further agrees to abide by any amendments approved to be part of this project by the Lafayette Historic Preservation Commission or Staff.

Applicant: (Print clearly or type) G. KURT WAHL

Signature of Applicant: G. Kurt Wahl Date: 1-13-20

Owner Print clearly or type) ROBERT HOCKEMA

Signature of Owner (if different): [illegible] Date: 1-13-20

APPLICATIONS AND DOCUMENTATION:

Applicant must provide 13 copies of the completed and signed COA Application and all documentation noted to be submitted with COA Application including: Materials to be used, detailed written description of the project with dimensions, drawings to scale, construction methods, finishes, manufacturing brochures and specifications as well as clearly labeled photographs of the building and affected areas. Plus any additional documentation as requested by Staff or the COA Committee. Electronic versions may be submitted if available in addition to the 13 copies noted above. The copies will be supplied to each Commissioner and the City Staff for the Lafayette Historic Preservation meeting.

The Commission follows the Secretary of Interior's Standards for Rehabilitation and Guidelines for Rehabilitation Historic Buildings when reviewing applications. Applications should follow these standards and guidelines when applicable. Additional guidelines, Preservation Briefs, Bulletins and "The Resource Guide", can be accessed on line at www. Lafayette.in.gov

Certain work in a Historic District may be approved by the Staff in lieu of being reviewed by the Lafayette Historic Preservation Commission, but the applicant will still be required to submit this application for Staff review with all documentation as noted for the proposed project.

Staff is authorized to approve the following: Signs that comply with the guidelines, Installation of storm windows, Installation of re-skinning of canvas awnings and canopies of a simple design, Installation of historically appropriate hand rails, Temporary removal of historic building components for the purpose of repair, Replacement of roof sheathing when there are no structural changes, Removal of chimneys that are only visible from the rear of a structure, Installation of stained or leaded glass windows, Installation of appropriate historical shutters, Removal of a non-original addition or alteration to a structure, and Extension of an approved COA for up to one additional year if the project scope has not changed. If questionable, please contact Staff to determine whether your project must be reviewed by the Lafayette Historic Preservation Commission.

APPLICATION SUBMITTAL DEADLINE:
This COA Application Form and all supporting documentation **MUST** arrive by 12:00 noon on the deadline date established to be considered at the next Historic Preservation Commission Meeting. Any information not provided to staff in advance of the meeting may not be considered by the Commission during their deliberation. Please call if you have any questions and Staff will assist you.

MEETING ATTENDANCE:
For COA applications requiring review by the Lafayette Historic Preservation Commission attendance at the Commission Meeting is strongly recommended to present the project and answer questions. The Commission will also hear public comments prior to making a decision on the project. Failure by the Owner, applicant or contractor to attend such meetings may result in denial of the Application due to insufficient presentation.

INSPECTIONS:
All projects will be inspected while work is in progress and upon completion of the project to ensure compliance with the approved COA.
Owner acknowledges that while the Lafayette Historic Preservation Commission only considers Certificates of Appropriateness for exterior features, under certain circumstances it may be necessary for the Commission Staff to have access to the interior of the building in order to accurately assess the condition of the exterior feature(s). The lack of access to the interior may prevent the Commission Staff from making a favorable recommendation.
Applicant **MUST** notify the Commission Staff upon completion of the approved COA work for a final inspection of the improvements.

WORKING WITHOUT A COA / DENIAL OF A COA
Lafayette Staff inspectors regularly inspect historic properties to ensure compliance with approved Certificates of Appropriateness. When additional work has been commenced without an approved COA, a Staff inspector may issue a stop work order and request that the Owner seek an addendum to the original COA to include any additional work, revisions or changes. Work undertaken without a Certificate of Appropriateness is in violation of Title 12 of the Lafayette City Code, and the Lafayette Historic Preservation Commission may require that unauthorized changes in a historic structure be reversed and or completed in a satisfactory manner. If the work continues, a building official may issue a citation with a fine and the Historic Preservation Commission may institute suit for injunction to restrain the Owner from further violation and to cause the violation to be prevented, abated or removed. Please contact the Staff if there is any question about changing the scope of the work approved.

*Include here submittal deadline and HPC meeting dates. (Change page numbers as required for pages added if necessary)

521 MAIN STREET

EXISTING FRONT ELEVATION

SCALE: $\frac{3}{16}$" = 1'-0"

PROPOSED FRONT ELEVATION

SCALE: 3/16" = 1'-0"

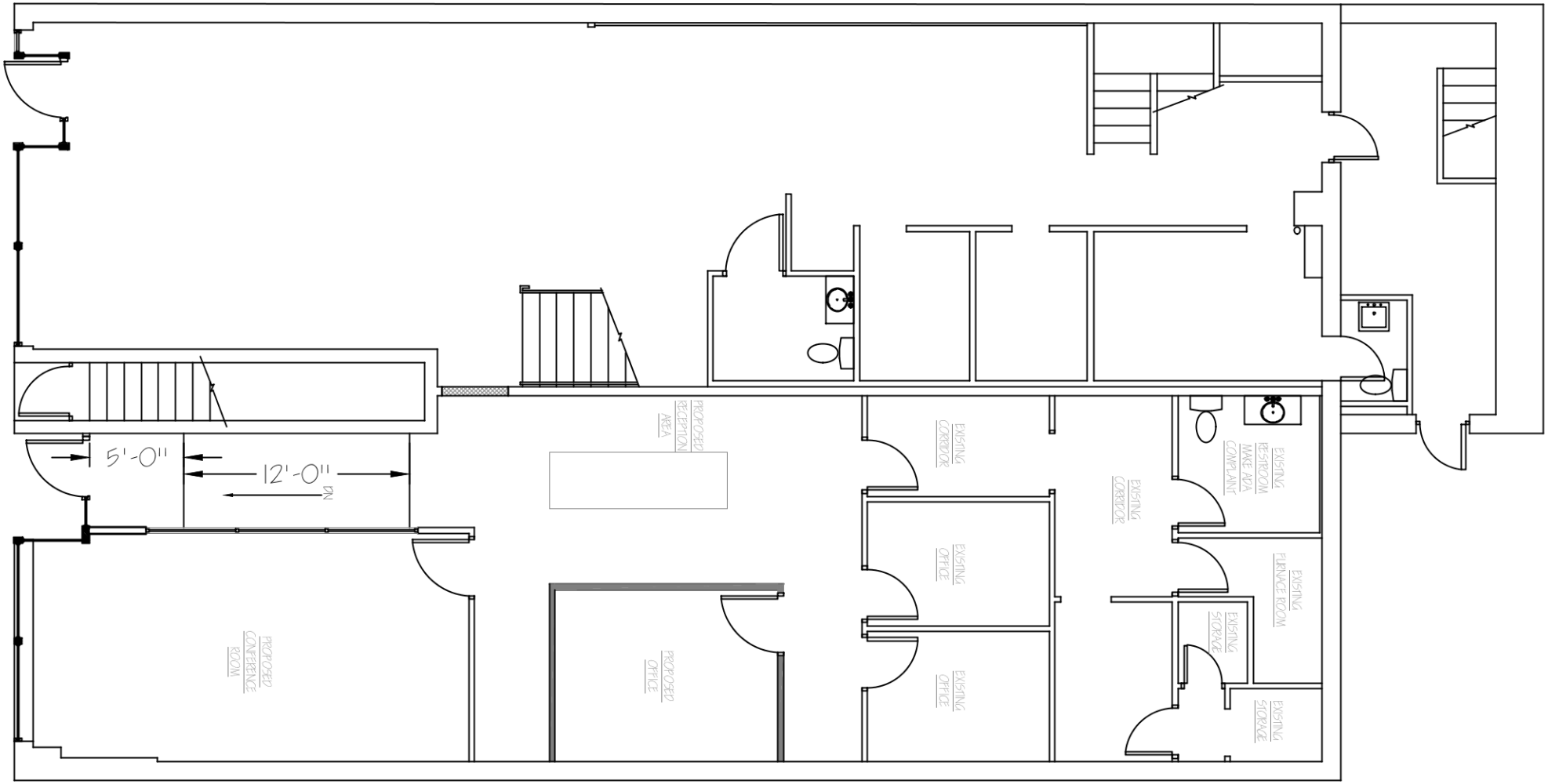

FLOOR PLAN

SCALE: $\frac{1}{8}$" = 1'-0"

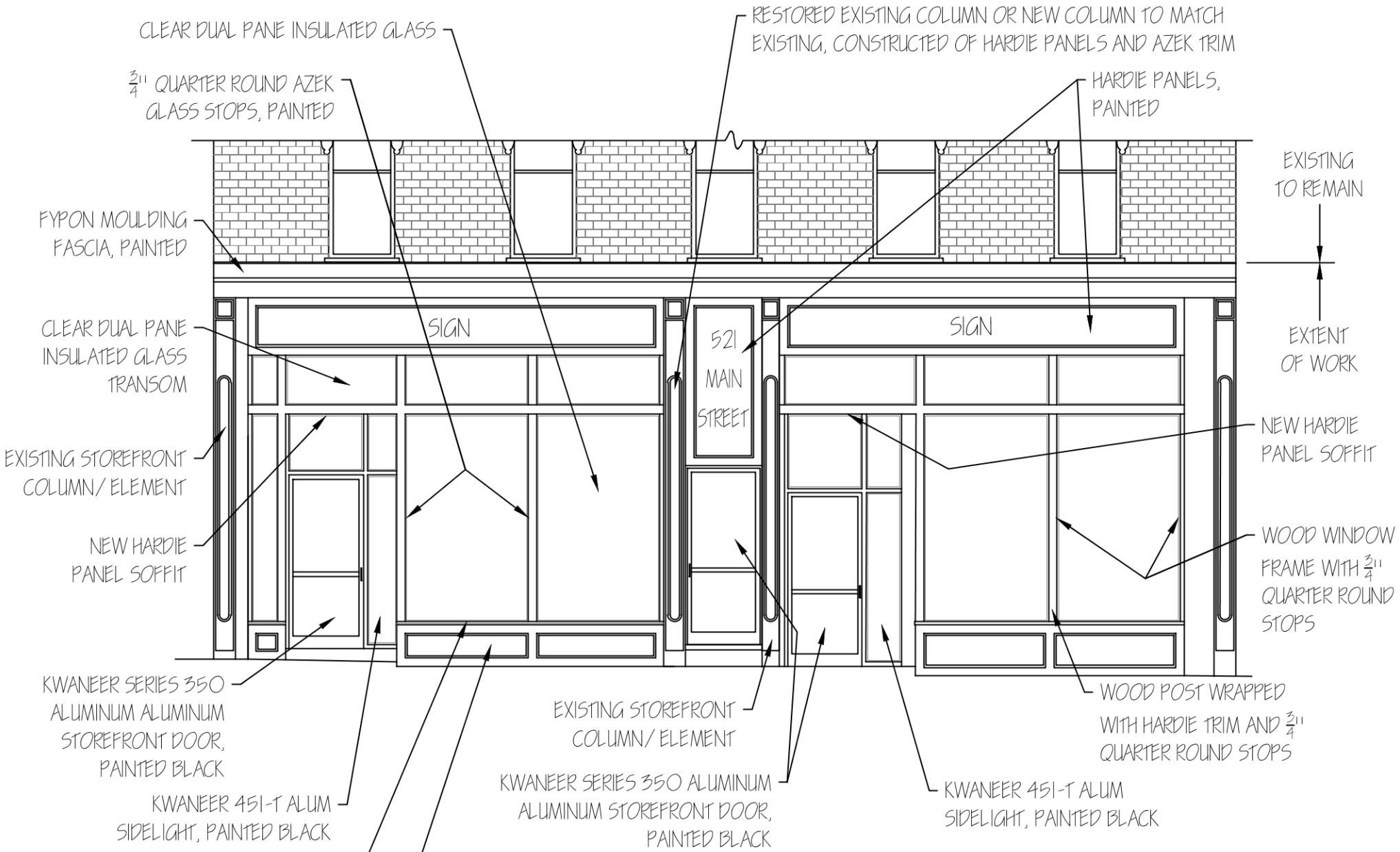

MATERIAL DESCRIPTION ELEVATION

SCALE: 3/16" = 1'-0"

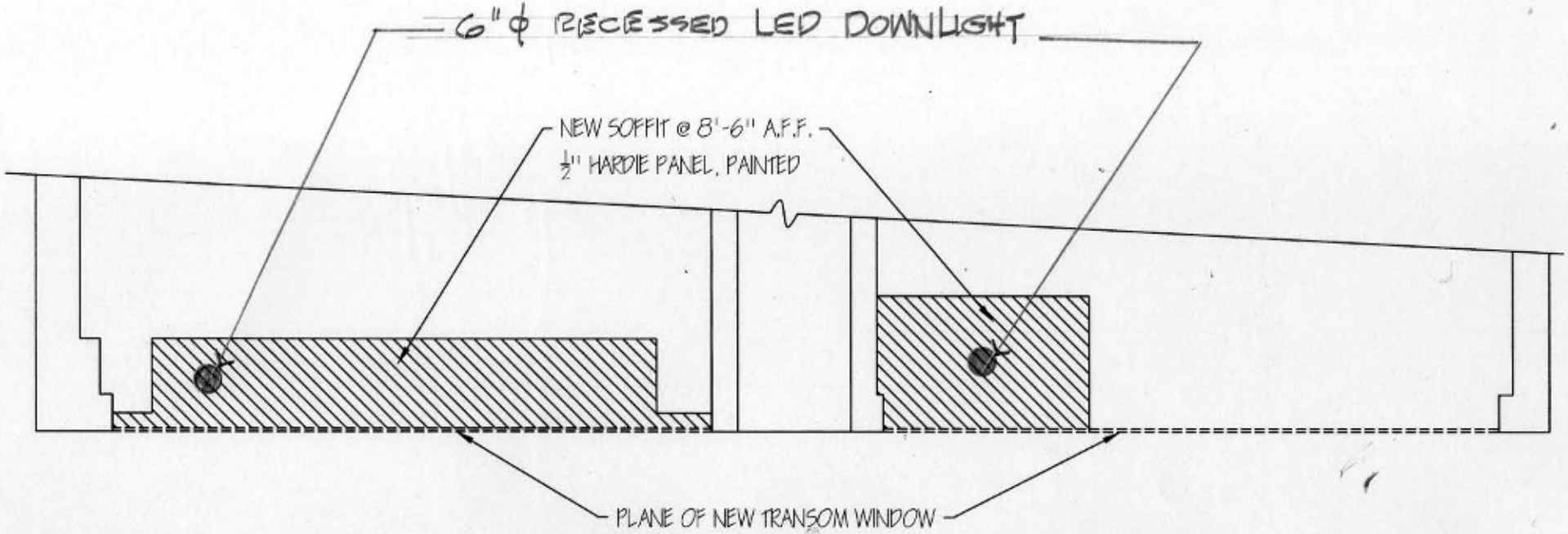

SOFFIT PLAN

SCALE: ¼" = 1'-0"

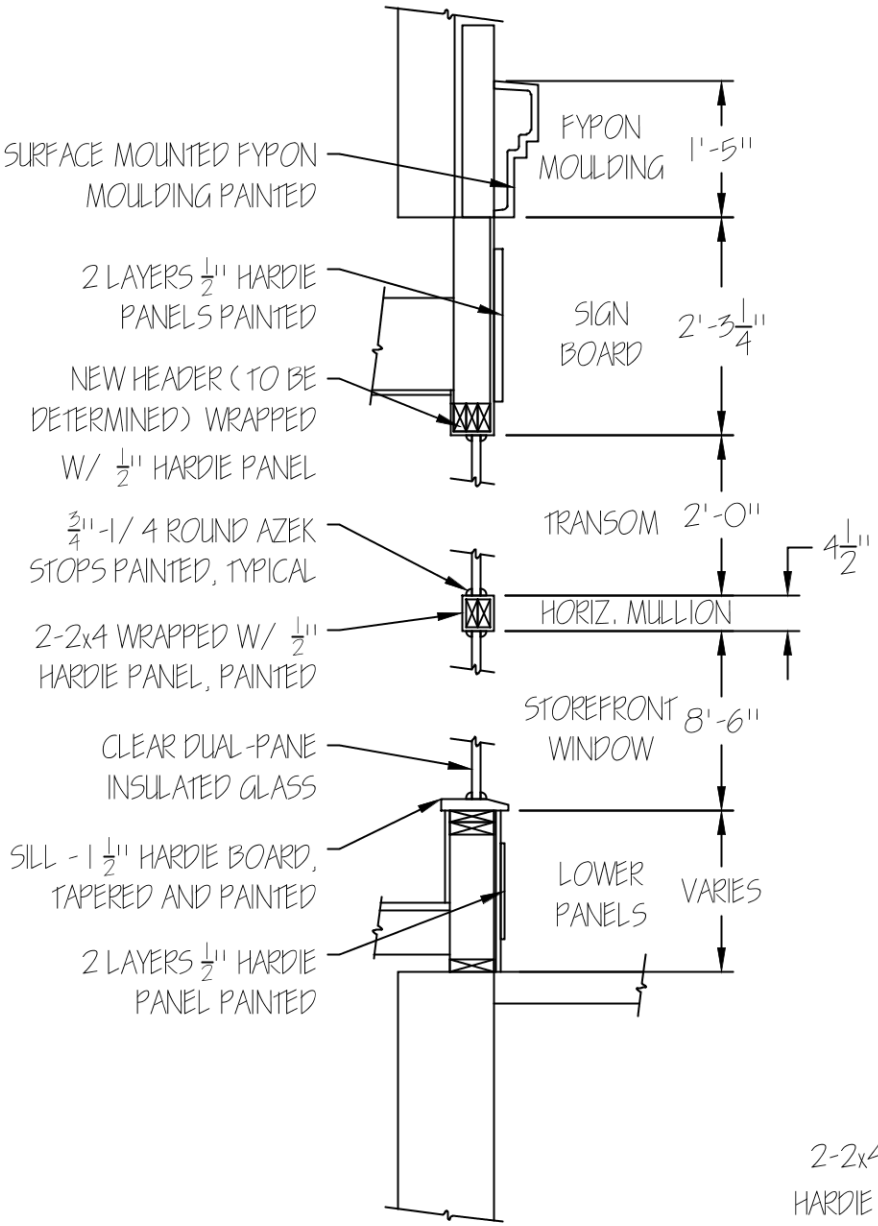

STOREFRONT SECTION

SCALE: 1/2" = 1'-0"

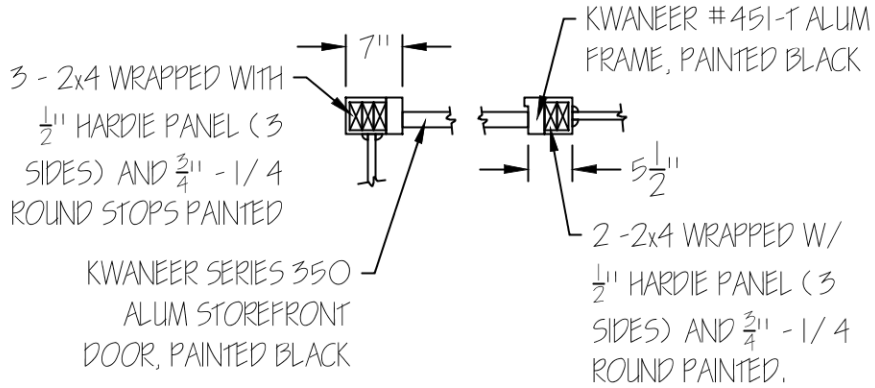

INSIDE CORNER SECTION

SCALE: 1/2" = 1'-0"

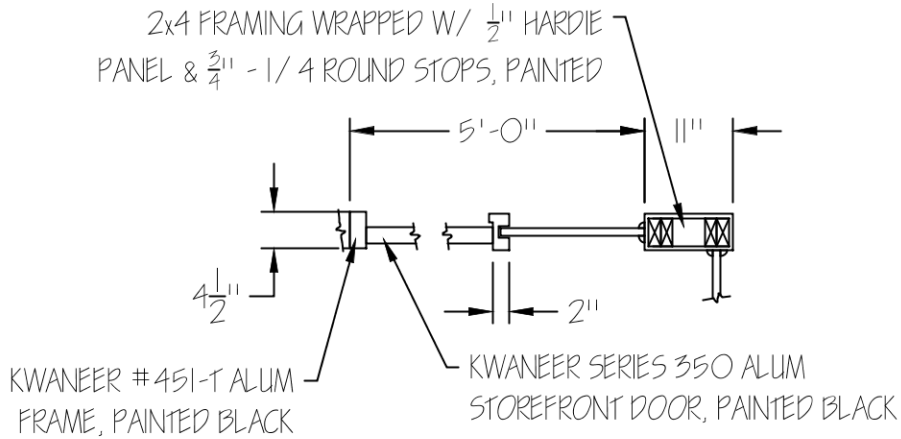

INSIDE CORNER SECTION

SCALE: 1/2" = 1'-0"

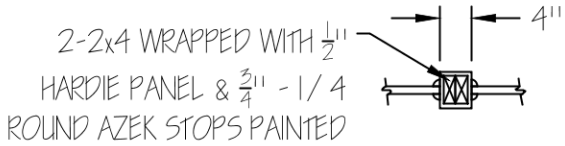

VERTICAL MULLION SECTION

SCALE: 1/2" = 1'-0"

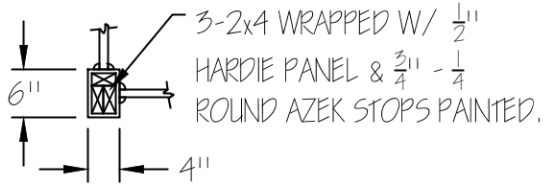

OUTSIDE CORNER SECTION

SCALE: 1/2" = 1'-0"

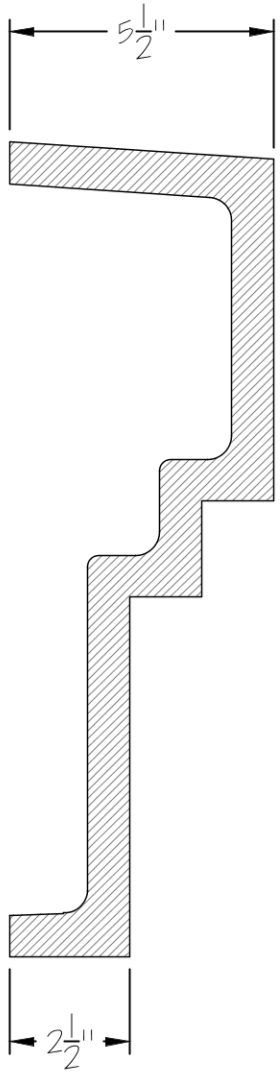

17" MOULDING PROFILE

SCALE: 3"=1'-0"

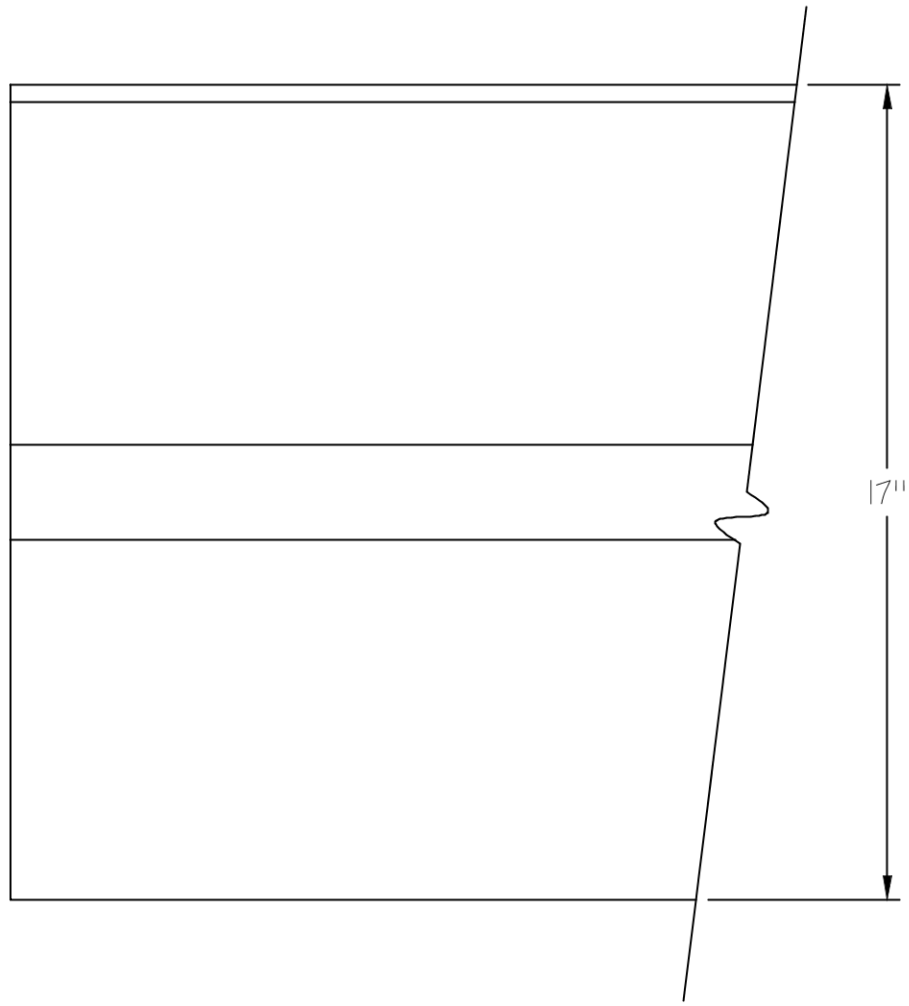

17" MOULDING FRONT VIEW

SCALE: 3"=1'-0"

"FYPON" #MLD533, POLYURETHANE, MOULDING FASCIA, PAINTED

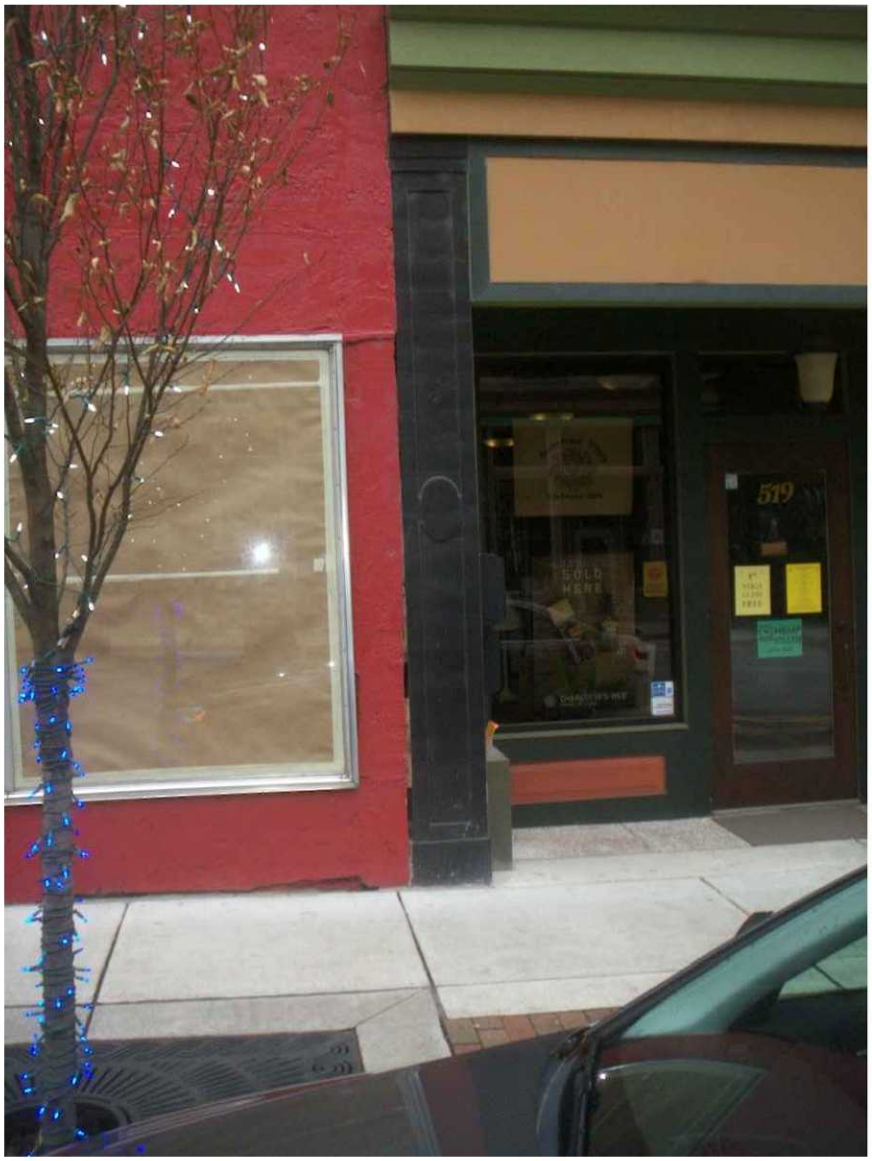
519